YEDİTEPE UNIVERSITY

Electrical and Electronic Engineering

EE-421

Design and Analysis of a Pyramidal Horn Antenna and 4×4 Horn Array at 5 GHz

Name: Ali Buğra

Surname: Bebek

Number: 20210701034

İçindekiler

Design and Analysis of a Pyramidal Horn Antenna and 4×4 Horn Array at 5 GHz 3
1. Introduction 3
2. Antenna Type and Operating Principle 4
3. Antenna Geometry and Modeling 4
3.1 Step-by-Step Modeling Procedure in CST Studio Suite 4
4. 4×4 Horn Antenna Array Configuration 7
4.1 Common Feeding Strategy for the Horn Array 7
5. Simulation Setup 8
5.1 Mesh Optimization and Computational Efficiency 9
6. Results and Discussion 10
6.1 Single Horn Antenna Results 11
6.2 4×4 Horn Antenna Array Results 12
6.3 Comparison Between Single Horn and 4×4 Array 13
7. Conclusion 14

Design and Analysis of a Pyramidal Horn Antenna and 4×4 Horn Array at 5 GHz

1. Introduction

Horn antennas are widely used directional antennas that operate by providing a gradual transition of electromagnetic waves from a guided structure to free space. This transition acts as an impedance transformer between the waveguide and free space, reducing reflections at the aperture and improving radiation efficiency, as described in classical aperture antenna theory. They are typically formed by flaring the open end of a rectangular waveguide, which reduces impedance mismatch and reflection losses. This smooth transition improves radiation efficiency and results in stable and highly directive radiation patterns.

Horn antennas are commonly used in radar systems, satellite communications, antenna measurement ranges, electromagnetic compatibility (EMC) testing, and as feed antennas for reflector and array systems. In many high-frequency systems, horn antennas serve as standard reference antennas due to their well-defined radiation characteristics. Their advantages include high directivity, wide bandwidth, low side-lobe levels, and the ability to handle high power levels.

In this work, a pyramidal horn antenna operating at 5 GHz is designed and simulated using CST Studio Suite. In addition, a 4×4 horn antenna array consisting of 16 identical elements is constructed and analyzed. The radiation characteristics of the single horn antenna and the array configuration are compared in order to evaluate the performance improvement obtained through arraying.

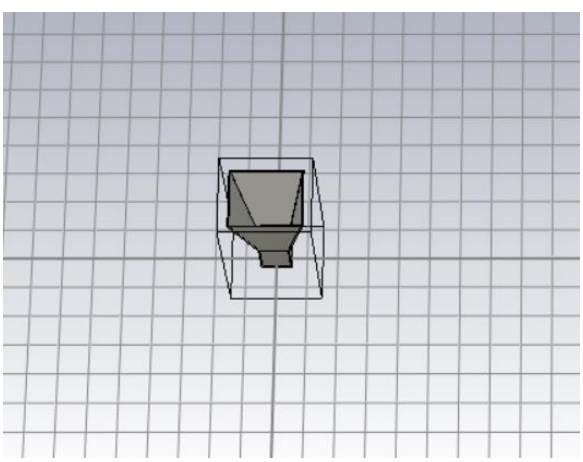

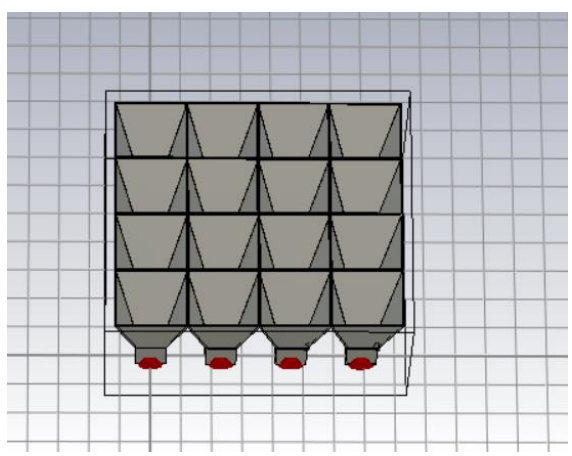

Figure 1 and Figure 2: 3D model of the single horn antenna and 4x4 horn antenna

2. Antenna Type and Operating Principle

The antenna is fed by a rectangular waveguide operating in the dominant $TE_{1\,0}$ mode, which ensures single-mode operation and stable field distribution at the horn aperture. The horn section expands in both the E-plane and H-plane directions. For this reason, the antenna is classified as a pyramidal horn antenna. Although the aperture shape is rectangular, the correct theoretical classification is pyramidal horn rather than rectangular horn.

The pyramidal horn structure improves impedance matching between the waveguide and free space by gradually expanding the aperture in both principal planes. This controlled expansion shapes the aperture field distribution and leads to increased directivity and reduced side-lobe levels compared to simpler horn configurations. Compared to an open-ended waveguide, the horn antenna provides higher directivity and reduced back radiation.

3. Antenna Geometry and Modeling

3.1 Step-by-Step Modeling Procedure in CST Studio Suite

The horn antenna geometry was created in CST Studio Suite by following a systematic modeling procedure. First, the rectangular waveguide section was defined using a brick primitive with dimensions corresponding to the selected operating frequency. The waveguide walls were assigned Perfect Electric Conductor (PEC) material to represent an ideal metallic structure.

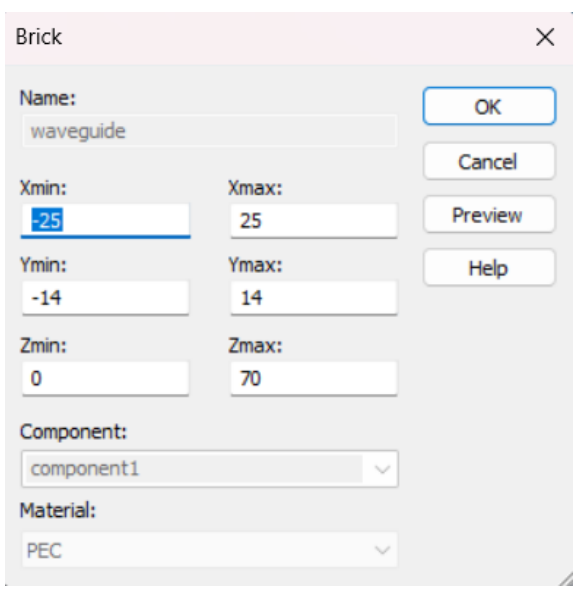

Figure 3: Creation of the rectangular waveguide using brick primitive

Next, a shell operation was applied to the waveguide brick to define the wall thickness, ensuring that the structure represents a hollow metallic waveguide rather than a solid block.

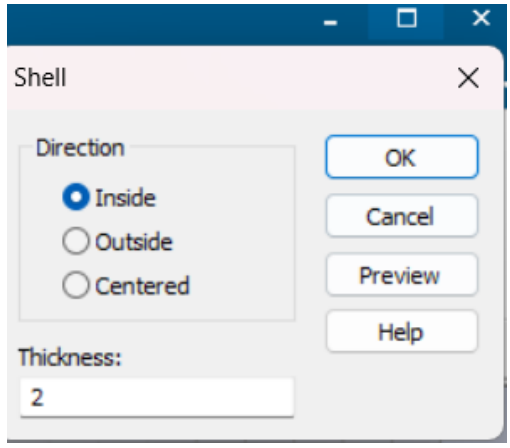

Figure 4 Application of shell operation to obtain hollow waveguide walls

After defining the waveguide section, the horn flare region was generated by extruding the waveguide aperture along the propagation direction with gradually increasing dimensions in both the E-plane and H-plane. This step forms the pyramidal horn geometry.

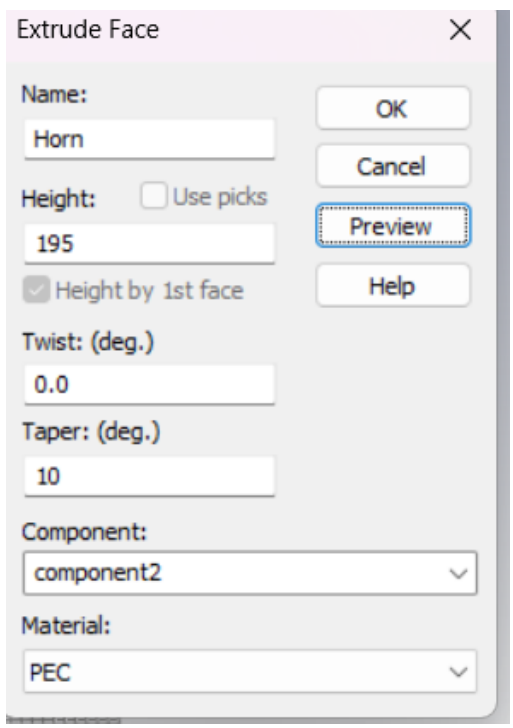

Figure 5:Extrusion process showing pyramidal horn flare geometry

The excitation of the horn antenna was realized using a probe-fed waveguide configuration. Instead of directly exciting the waveguide using an ideal waveguide port, a metallic monopole probe was introduced inside the rectangular waveguide to physically represent a realistic excitation mechanism. A cylindrical monopole with Perfect Electric Conductor (PEC) material was placed inside the waveguide near the back wall. The monopole is oriented along the electric field direction (E-plane) of the dominant $TE_{1\ 0}$ mode. This orientation ensures efficient coupling between the excitation source and the desired waveguide mode. The monopole is excited using a Discrete Edge Port defined between the base of the monopole and the inner wall of the waveguide. The port is assigned a reference impedance of 50 Ω, which is consistent with standard RF feeding systems. The discrete port provides the voltage excitation required to drive current along the monopole, which in turn generates the electromagnetic fields inside the waveguide.

The oscillating current on the monopole probe produces an electric field distribution that couples naturally to the dominant $TE_{1\ 0}$ mode of the rectangular waveguide. Higher-order modes are suppressed due to the waveguide dimensions being selected such that their cutoff frequencies are above the operating frequency of 5 GHz. As a result, the electromagnetic fields launched by the monopole evolve into a stable $TE_{1\ 0}$ mode before propagating toward the horn section.

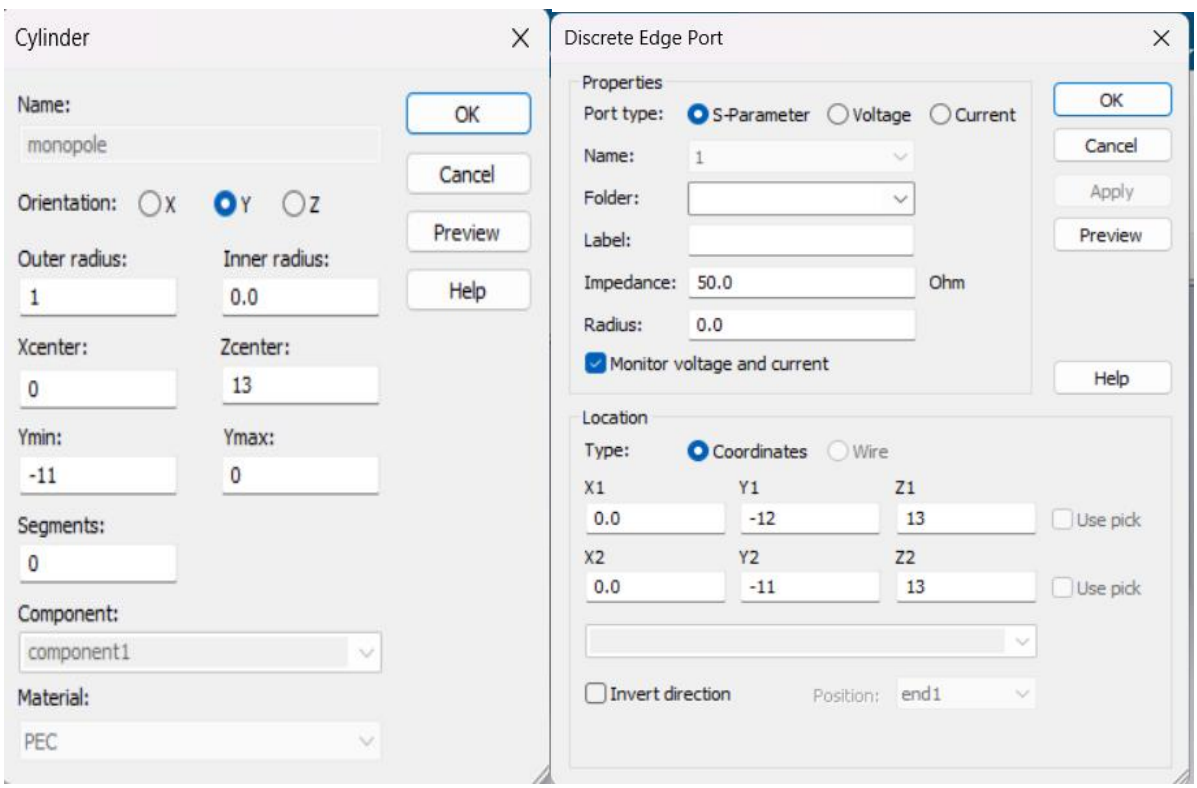

Figure 6:Monopole cylinder and Discrete Edge Port

This excitation method closely resembles practical coaxial-to-waveguide transitions commonly used in microwave systems. By employing a probe-fed discrete port instead

of an idealized waveguide port, the model provides a more physically realistic representation of energy coupling into the horn antenna while maintaining numerical stability and accurate S-parameter results.

4. 4×4 Horn Antenna Array Configuration

4.1 Common Feeding Strategy for the Horn Array

To increase the antenna directivity, the single horn antenna was replicated to form a 4×4 planar array consisting of 16 identical horn elements. According to aperture antenna theory, increasing the effective aperture area directly increases antenna directivity, which motivates the use of horn arrays in high-gain applications. The horns were positioned adjacent to each other with zero spacing between elements, forming a compact array configuration.

An ideal common feeding network was assumed for the array.

In practical horn array systems, a corporate feeding network is commonly used to distribute equal power and phase to all antenna elements. Such networks ensure coherent radiation, which is essential for achieving maximum array gain and broadside beam formation.

In this study, the physical corporate feed network was not explicitly modeled in order to reduce geometrical complexity and computational cost. Instead, an ideal common feeding condition was implemented numerically using CST Studio Suite's "Combine Calculation Results" feature. All horn elements were excited with equal amplitude and zero phase difference, corresponding to a perfectly balanced corporate feed network.

This approach allows the intrinsic radiation performance of the horn array to be evaluated independently from feed network losses and phase errors. Therefore, the obtained results represent the upper performance limit of the array under ideal feeding conditions. Instead of explicitly modeling the physical feed network, all horn elements were excited with equal amplitude and zero phase difference using the "Combine Calculation Results" feature in CST Studio Suite. This approach represents an ideal corporate feed network and produces broadside radiation.

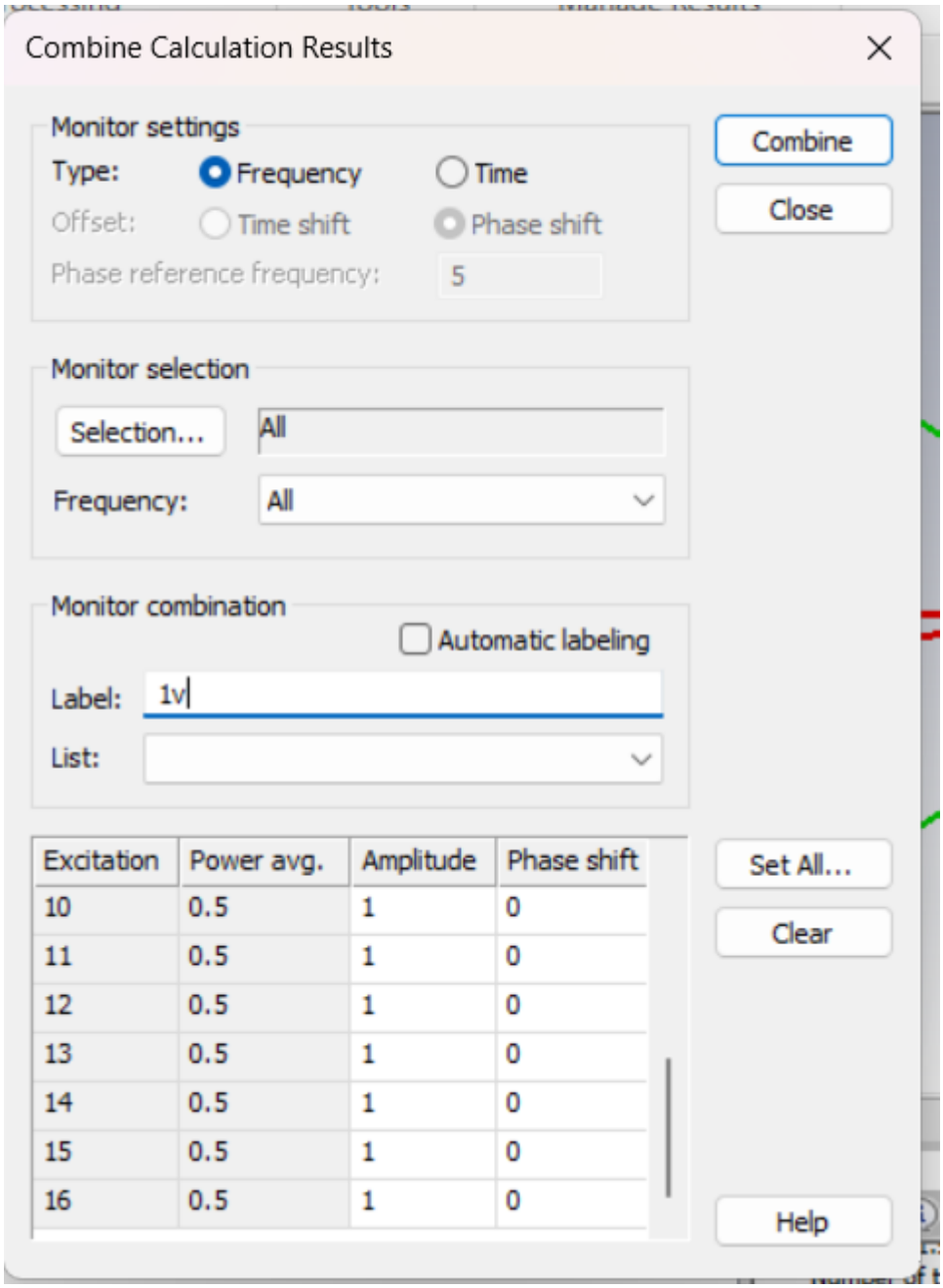

Figure 7:Combine Calculation Results excitation settings

5. Simulation Setup

The simulations were performed using the Time Domain Solver in CST Studio Suite. A hexahedral mesh was selected for discretization, and the solver accuracy was set to −40

dB. All ports were excited simultaneously, and the reference impedance was set to 50 Ω.

Far-field monitors were defined at 5 GHz to evaluate the radiation characteristics of both the single horn antenna and the horn antenna array.

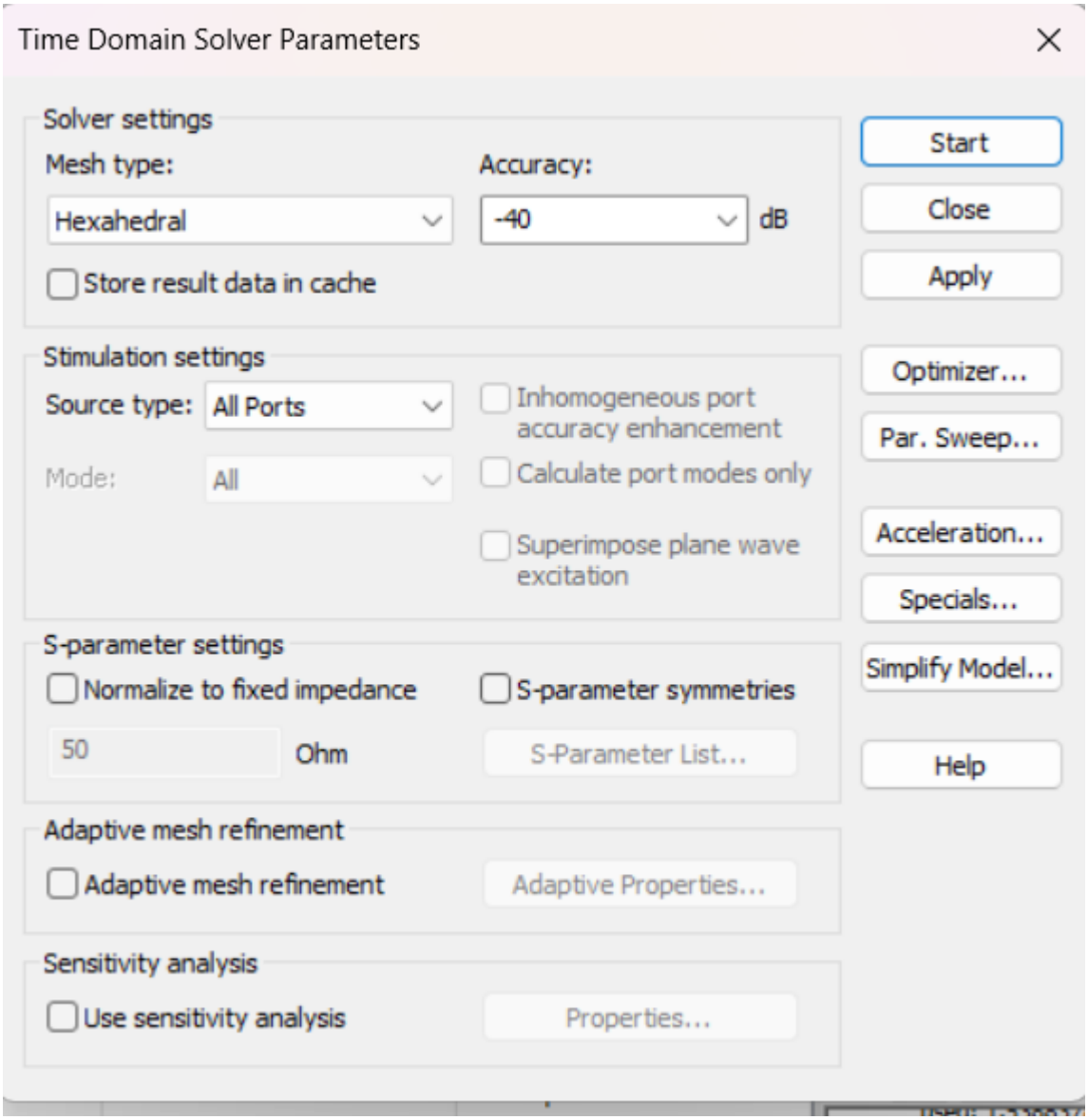

Figure 8:Time Domain Solver configuration and simulation parameters

5.1 Mesh Optimization and Computational Efficiency

During the initial simulations of the 4×4 horn antenna array, the total number of mesh cells exceeded 40 million due to the large electrical size of the structure and the detailed horn geometry. This resulted in long simulation times and high computational cost.

To improve simulation efficiency while maintaining numerical accuracy, mesh optimization was performed using CST Studio Suite's hexahedral mesh settings. The number of cells per wavelength and the maximum cell size were adjusted. Finer mesh density was preserved in critical regions such as the waveguide-to-horn transition and the horn apertures, where strong electromagnetic field variations occur.

As a result of these optimizations, the total mesh cell count was reduced to approximately 9 million cells. This significantly decreased simulation time while preserving stable $S_{1\ 1}$ characteristics and consistent far-field radiation results.

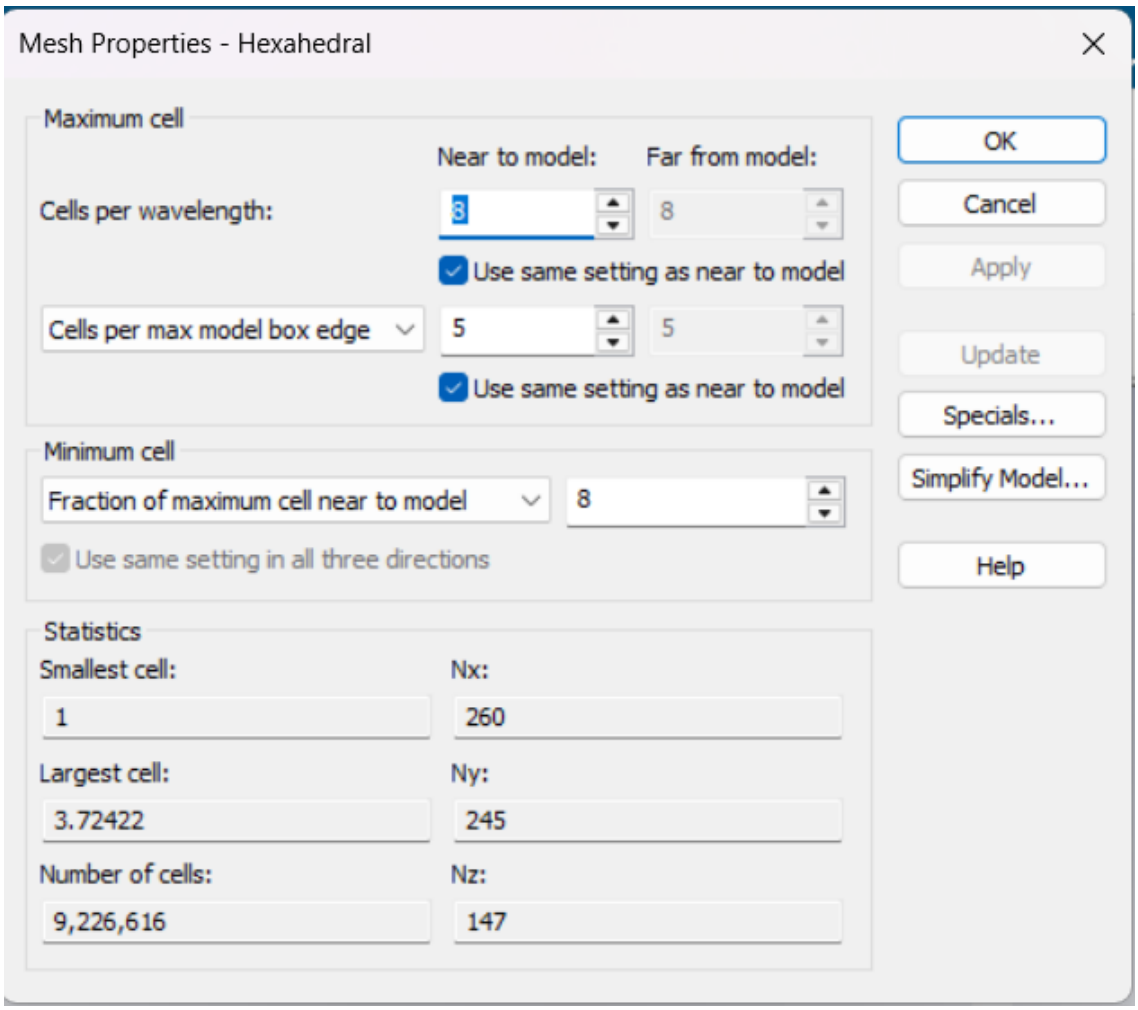

Figure 9:Optimized hexahedral mesh statistics and visualization

6. Results and Discussion

In this section, the simulated reflection coefficient ($S_{1\ 1}$) and far-field radiation characteristics of both the single horn antenna and the 4×4 horn antenna array are presented and interpreted. These results are used to evaluate impedance matching, radiation performance, and the effect of arraying on antenna directivity.

6.1 Single Horn Antenna Results

6.1.1 Reflection Coefficient ($S_{1\ 1}$)

The simulated reflection coefficient ($S_{1\ 1}$) of the single pyramidal horn antenna is shown in Figure 10. The antenna exhibits a clear resonance around 5 GHz, where the magnitude of $S_{1\ 1}$ drops well below −10 dB. This indicates good impedance matching between the feed waveguide and free space at the design frequency. The wide impedance bandwidth is a characteristic advantage of horn antennas.

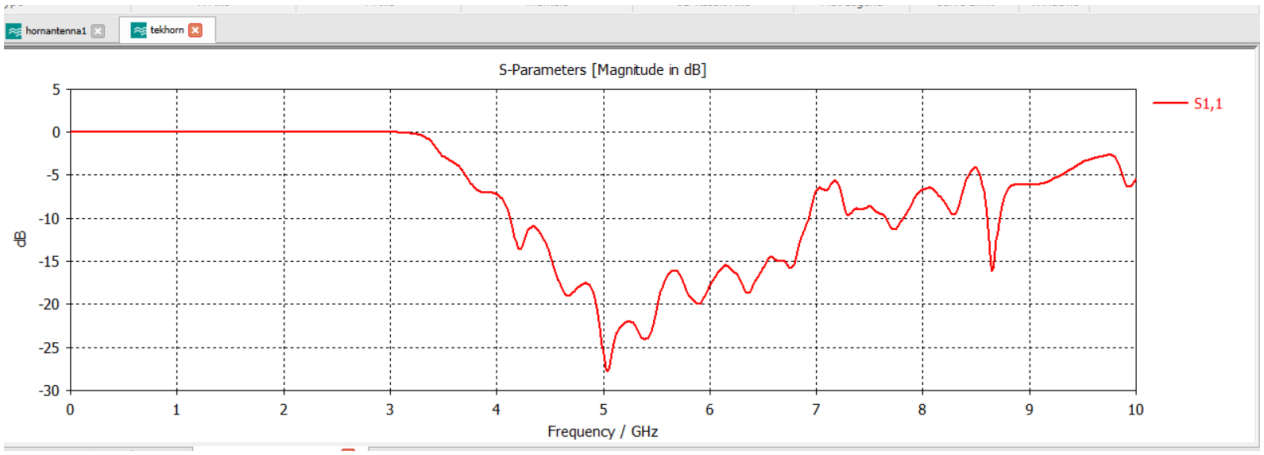

Figure 10: $S_{1\ 1}$ magnitude versus frequency for the single horn antenna

6.1.2 Far-Field Radiation Characteristics

The 3D far-field radiation pattern of the single horn antenna at 5 GHz is illustrated in Figure 11. The antenna radiates a directive beam along the boresight direction with a maximum directivity of approximately 14.86 dBi. The radiation pattern is symmetric in both principal planes, which confirms proper excitation of the dominant $TE_{1\ 0}$ mode and a well-formed aperture field distribution.

The radiation efficiency and total efficiency values are close to 0 dB, confirming that the antenna radiates most of the input power effectively with negligible losses under the PEC assumption.

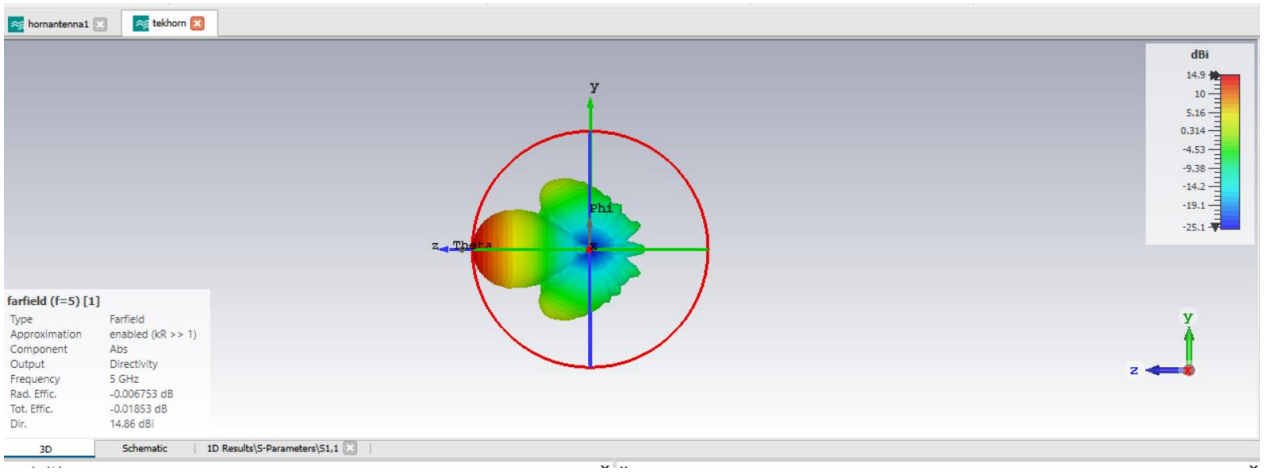

Figure 11: 3D far-field radiation pattern of the single horn antenna

The radiation efficiency and total efficiency values are close to 0 dB, confirming that the antenna radiates most of the input power effectively.

6.2 4×4 Horn Antenna Array Results

6.2.1 Reflection Coefficient ($S_{1\ 1}$)

The reflection coefficient of the 4×4 horn antenna array is presented in Figure 12. Since each horn element is identical to the single horn antenna and excited under the same conditions, the $S_{1\ 1}$ characteristic remains similar, with good impedance matching around 5 GHz. This confirms that array formation does not significantly degrade the matching performance of individual elements.

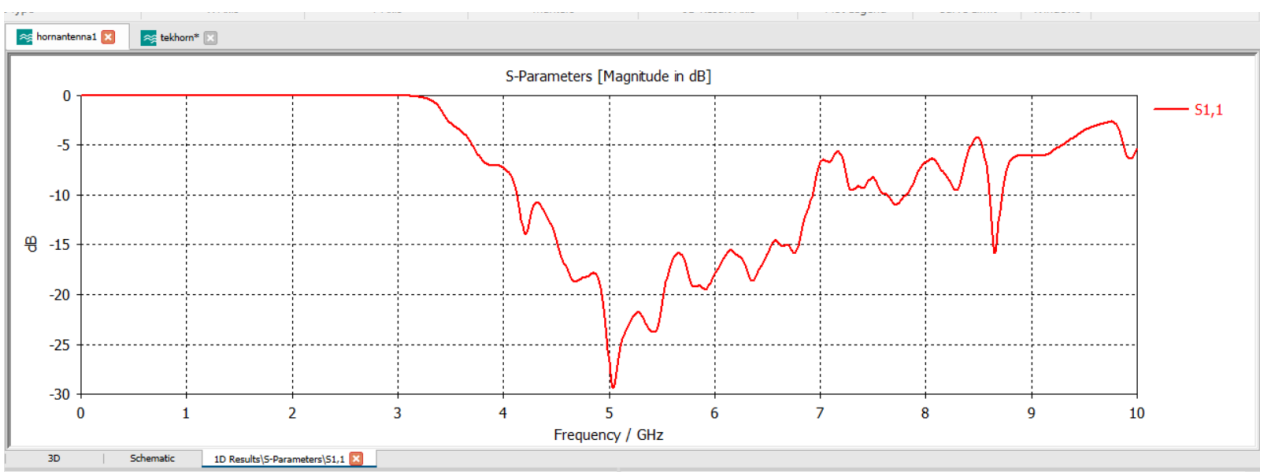

Figure 12: $S_{1\ 1}$ magnitude versus frequency for the 4×4 horn antenna array

6.2.2 Far-Field Radiation Characteristics

Figure 13 shows the combined 3D far-field radiation pattern of the 4×4 horn antenna array at 5 GHz. A highly directive main beam is observed in the broadside direction. The

maximum directivity reaches approximately 27.07 dBi, which represents a significant improvement compared to the single horn antenna.

For the 4×4 horn antenna array, the combined far-field results show a significant increase in directivity. The maximum directivity reaches approximately 27.07 dBi at 5 GHz. The main beam becomes significantly narrower compared to the single horn antenna, which is a direct consequence of coherent radiation from multiple elements.

The narrowing of the main lobe and the increased directivity are direct consequences of coherent radiation from the 16 horn elements. The radiation efficiency and total efficiency remain close to 0 dB, indicating negligible losses under the ideal feeding assumption.

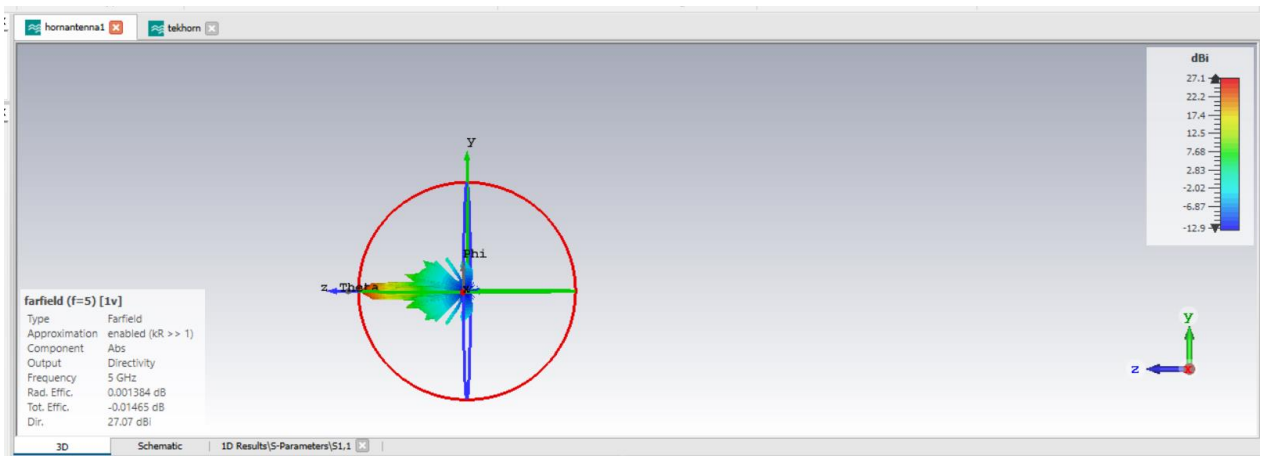

Figure 13: 3D far-field radiation pattern of the 4×4 horn antenna array

6.3 Comparison Between Single Horn and 4×4 Array

Figure 14 compares the far-field radiation patterns of the single horn antenna and the 4×4 horn antenna array at 5 GHz. The array configuration produces a much narrower main beam and significantly higher directivity.

The approximately 12 dB increase in directivity closely matches the theoretical array gain expected from a 16-element coherent array.

A comparison between the single horn antenna and the 4×4 horn antenna array clearly demonstrates the benefit of array configurations. The array effectively enlarges the overall radiating aperture, resulting in a narrower main beam and higher directivity, consistent with theoretical aperture antenna behavior. The measured directivity increase of approximately 12 dB is consistent with theoretical expectations for a 16-element coherent array.

$10\log(16) = 12$ dB

7. Conclusion

In this study, a pyramidal horn antenna operating at 5 GHz was designed, modeled, and simulated using CST Studio Suite. The antenna geometry was based on a rectangular waveguide operating in the dominant TE_{10} mode, and the horn flare was implemented in both principal planes to achieve efficient impedance matching and directional radiation. The single horn antenna demonstrated good impedance matching around the design frequency, with an S_{11} level well below −10 dB and a stable, symmetric far-field radiation pattern.

To further enhance the radiation performance, a 4×4 planar horn antenna array consisting of 16 identical elements was constructed by replicating the single horn antenna. An ideal common feeding strategy was assumed, corresponding to a perfectly balanced corporate feed network with equal amplitude and zero phase excitation across all elements. This approach enabled the evaluation of the intrinsic array behavior without the influence of feed network losses or phase imbalance.

Simulation results clearly showed that the array configuration provides a significant improvement in antenna directivity. While the single horn antenna achieved a maximum directivity of approximately 14.86 dBi, the 4×4 horn array reached a directivity of about 27.07 dBi. The observed gain enhancement of approximately 12 dB closely matches the theoretical array gain expected from a 16-element coherent array, confirming the validity of the design and simulation approach.

Mesh optimization played a critical role in making the simulation of the large horn array computationally feasible. By carefully adjusting the hexahedral mesh parameters, the total number of mesh cells was reduced from more than 40 million to approximately 9 million without compromising numerical accuracy. Key performance metrics such as S_{11} and far-field directivity remained stable after mesh refinement, demonstrating a successful balance between simulation efficiency and result reliability.

Overall, the results confirm that pyramidal horn antennas and their array configurations are well suited for high-gain microwave applications such as radar systems, satellite communication links, and antenna measurement facilities. Future work may include the explicit modeling of a practical corporate feeding network, investigation of mutual coupling effects between array elements, and experimental validation of the simulated results through fabrication and measurement.