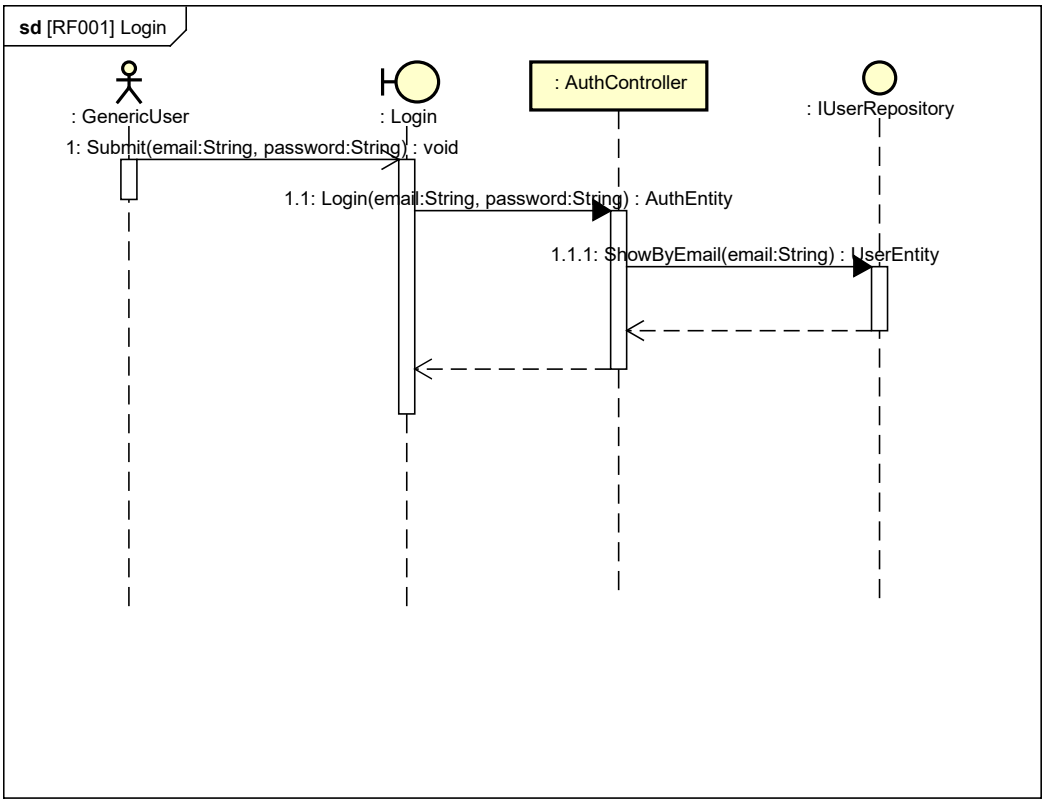
sd [RF001] Login
: GenericUser
: Login
: AuthController
: IUserRepository
1: Submit(email:String, password:String) : void
1.1: Login(email:String, password:String) : AuthEntity
1.1.1: ShowByEmail(email:String) : UserEntity

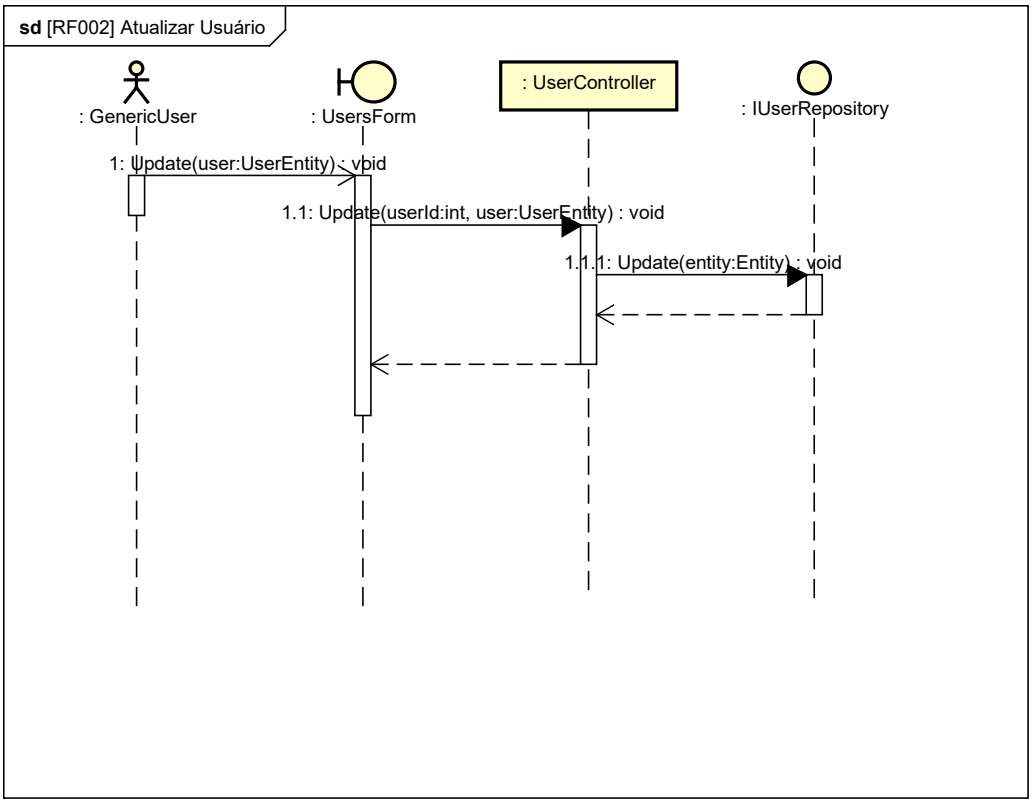
sd [RF002] Atualizar Usuário
: GenericUser
: UsersForm
: UserController
: IUserRepository
1: Update(user:UserEntity) : void
1.1: Update(userId:int, user:UserEntity) : void
1.1.1: Update(entity:Entity) : void

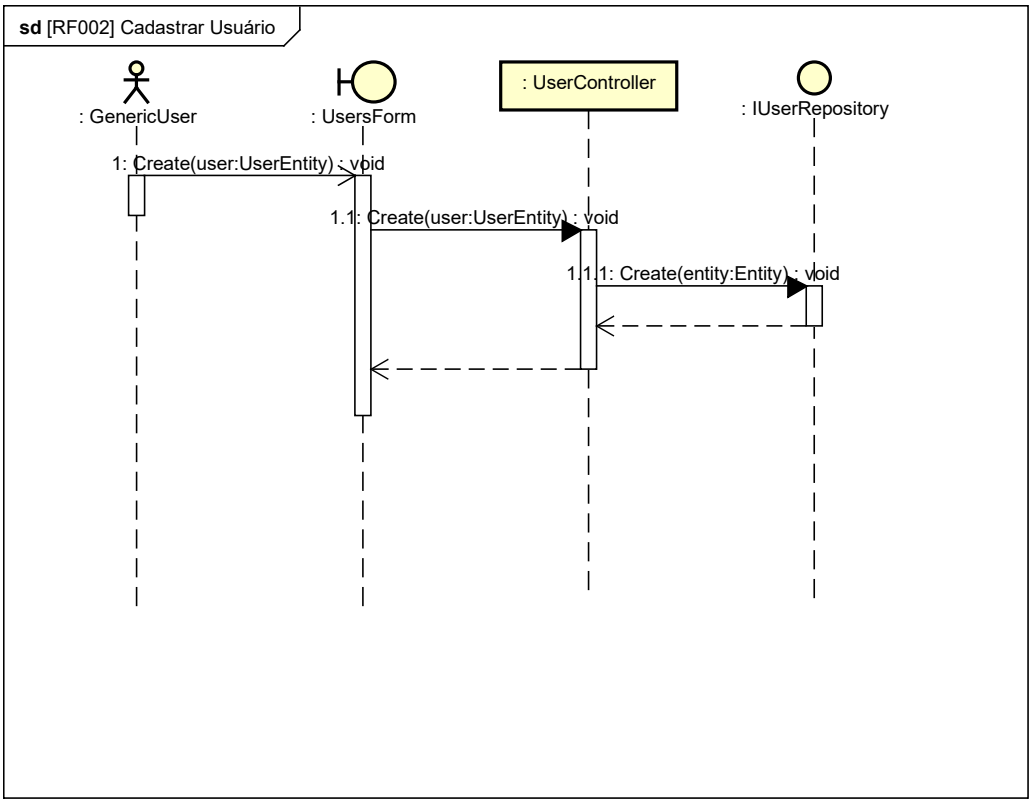
sd [RF002] Cadastrar Usuário
: GenericUser
: UsersForm
: UserController
: IUserRepository
1: Create(user:UserEntity) : void
1.1: Create(user:UserEntity) : void
1.1.1: Create(entity:Entity) : void

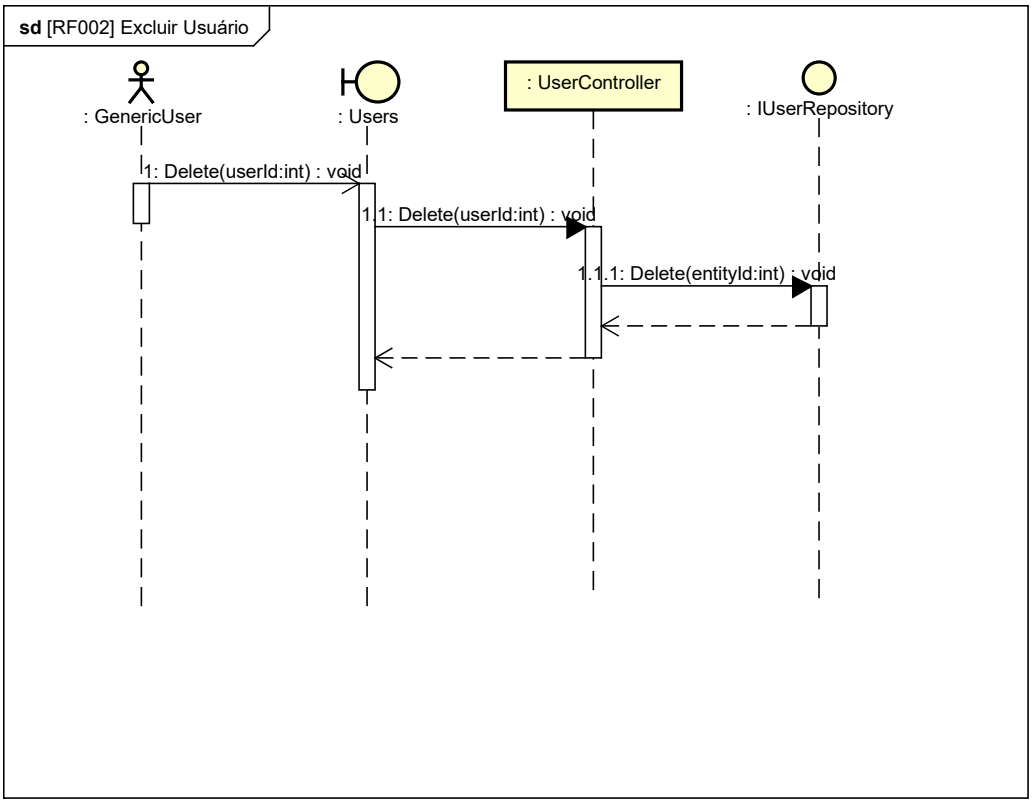
sd [RF002] Excluir Usuário
: GenericUser
: Users
: UserController
: IUserRepository
1: Delete(userId:int) : void
1.1: Delete(userId:int) : void
1.1.1: Delete(entityId:int) : void

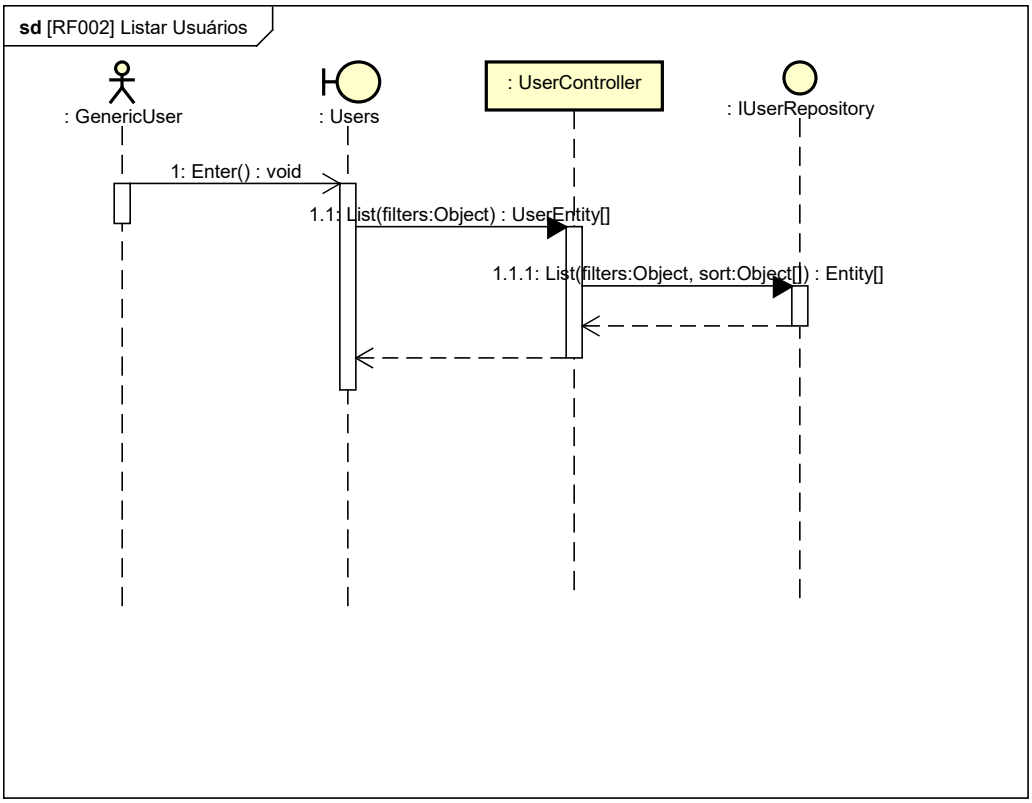
sd [RF002] Listar Usuários
: GenericUser
: Users
: UserController
: IUserRepository
1: Enter() : void
1.1: List(filters:Object) : UserEntity[]
1.1.1: List(filters:Object, sort:Object[]) : Entity[]

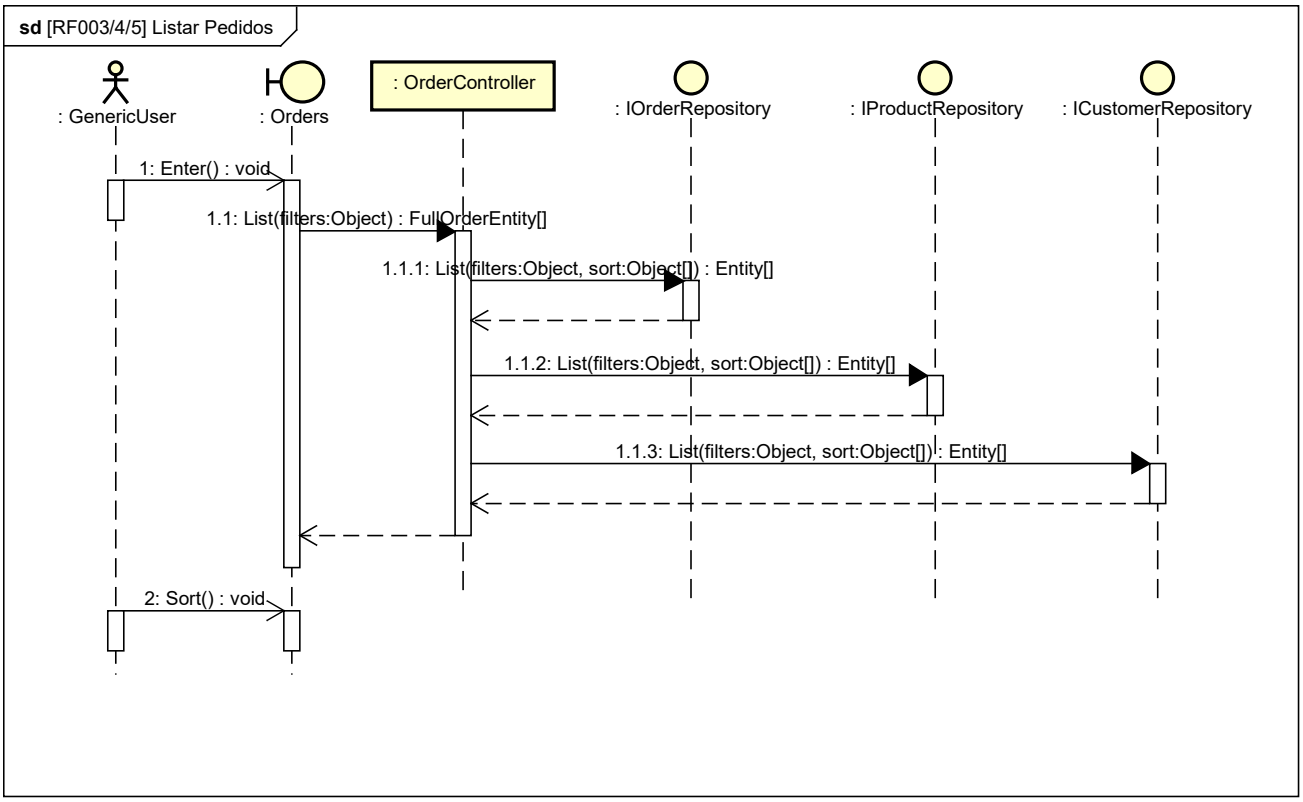
sd [RF003/4/5] Listar Pedidos
: GenericUser
: Orders
: OrderController
: IOrderRepository
: IProductRepository
: ICustomerRepository
1: Enter() : void
1.1: List(filters:Object) : FullOrderEntity[]
1.1.1: List(filters:Object, sort:Object[]) : Entity[]
1.1.2: List(filters:Object, sort:Object[]) : Entity[]
1.1.3: List(filters:Object, sort:Object[]) : Entity[]
2: Sort() : void

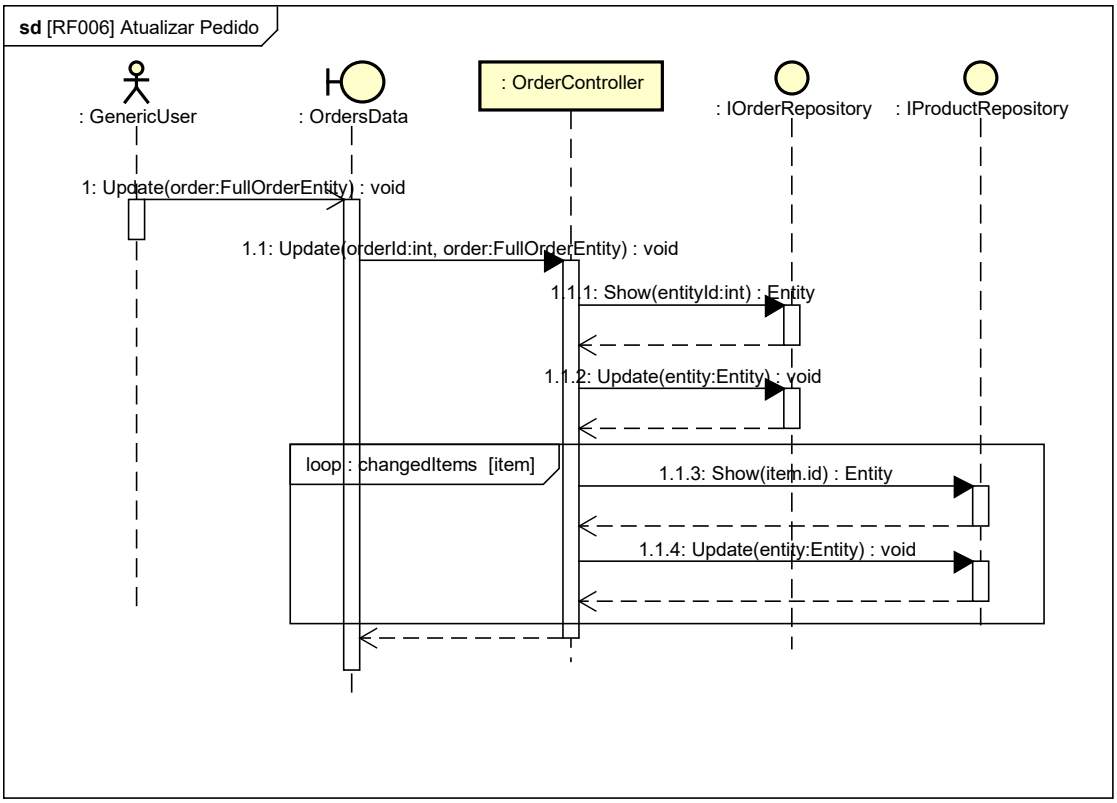
sd [RF006] Atualizar Pedido
: GenericUser
: OrdersData
: OrderController
: IOrderRepository
: IProductRepository
1: Update(order:FullOrderEntity) : void
1.1: Update(orderId:int, order:FullOrderEntity) : void
1.1.1: Show(entityId:int) : Entity
1.1.2: Update(entity:Entity) : void
loop : changedItems [item]
1.1.3: Show(item.id) : Entity
1.1.4: Update(entity:Entity) : void

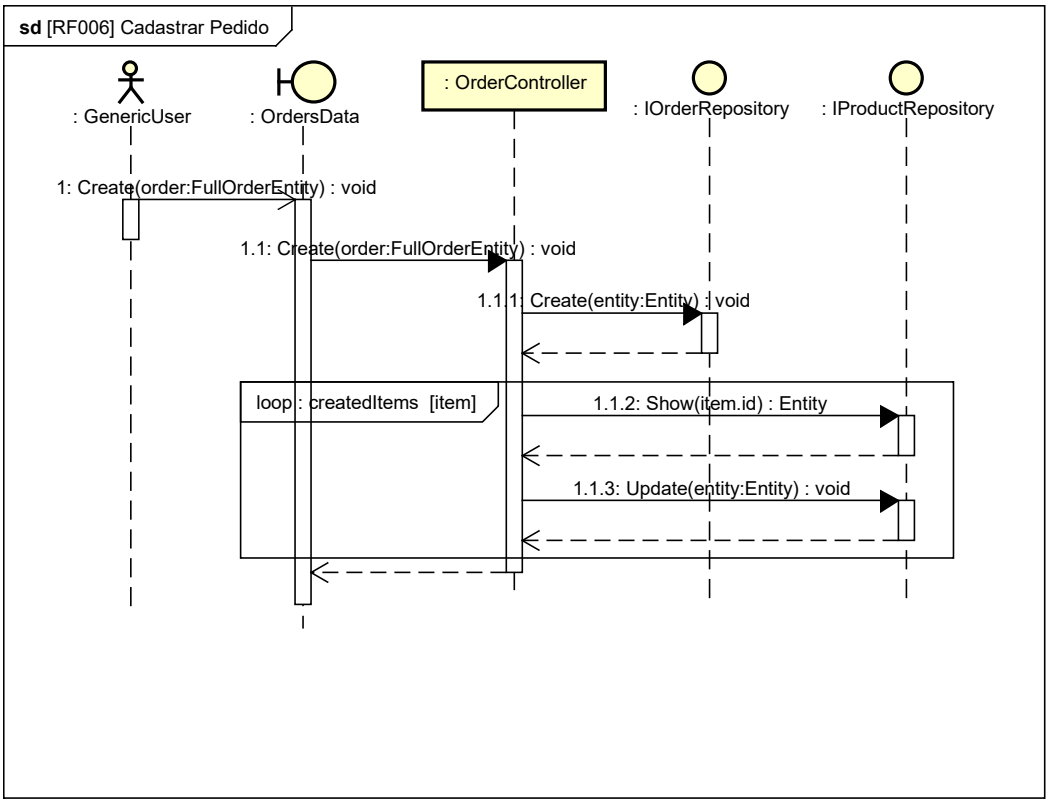
sd [RF006] Cadastrar Pedido
: GenericUser
: OrdersData
: OrderController
: IOrderRepository
: IProductRepository
1: Create(order:FullOrderEntity) : void
1.1: Create(order:FullOrderEntity) : void
1.1.1: Create(entity:Entity) : void
loop : createdItems [item]
1.1.2: Show(item.id) : Entity
1.1.3: Update(entity:Entity) : void

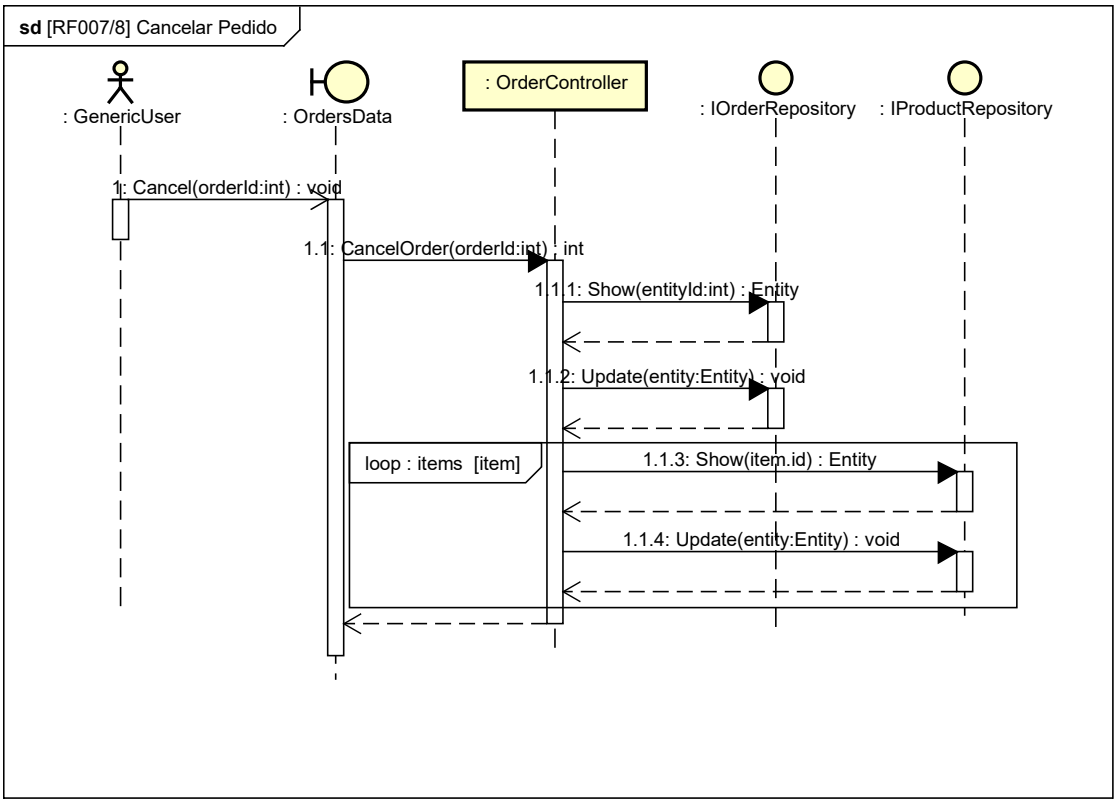
sd [RF007/8] Cancelar Pedido
: GenericUser
: OrdersData
: OrderController
: IOrderRepository
: IProductRepository
1: Cancel(orderId:int) : void
1.1: CancelOrder(orderId:int) : int
1.1.1: Show(entityId:int) : Entity
1.1.2: Update(entity:Entity) : void
loop : items [item]
1.1.3: Show(item.id) : Entity
1.1.4: Update(entity:Entity) : void

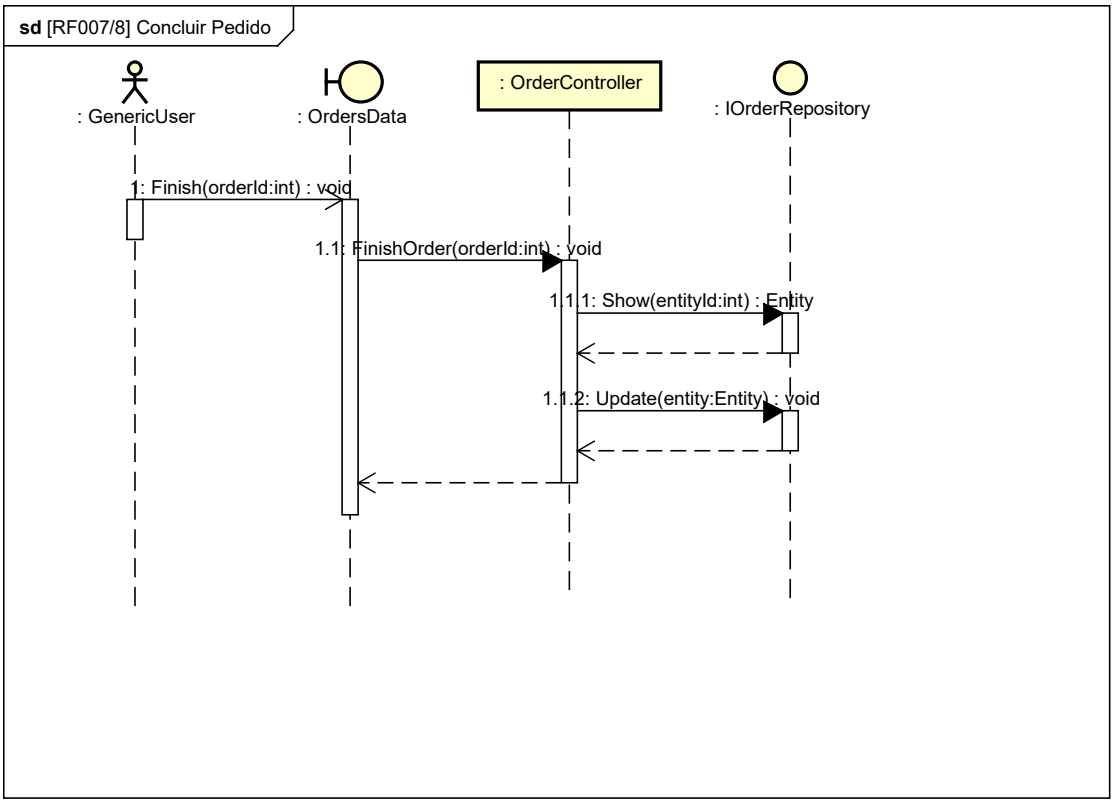
sd [RF007/8] Concluir Pedido
: GenericUser
: OrdersData
: OrderController
: IOrderRepository
1: Finish(orderId:int) : void
1.1: FinishOrder(orderId:int) : void
1.1.1: Show(entityId:int) : Entity
1.1.2: Update(entity:Entity) : void

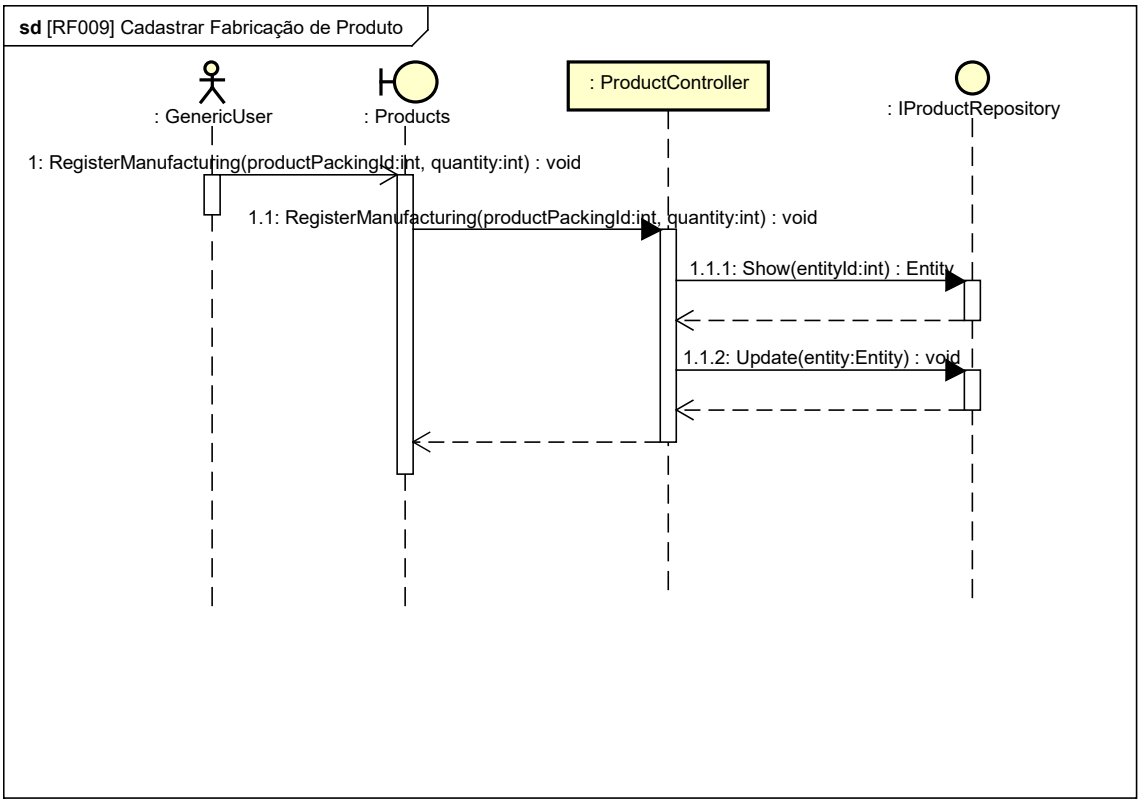
sd [RF009] Cadastrar Fabricação de Produto
: GenericUser
: Products
: ProductController
: IProductRepository
1: RegisterManufacturing(productPackingId:int, quantity:int) : void
1.1: RegisterManufacturing(productPackingId:int, quantity:int) : void
1.1.1: Show(entityId:int) : Entity
1.1.2: Update(entity:Entity) : void

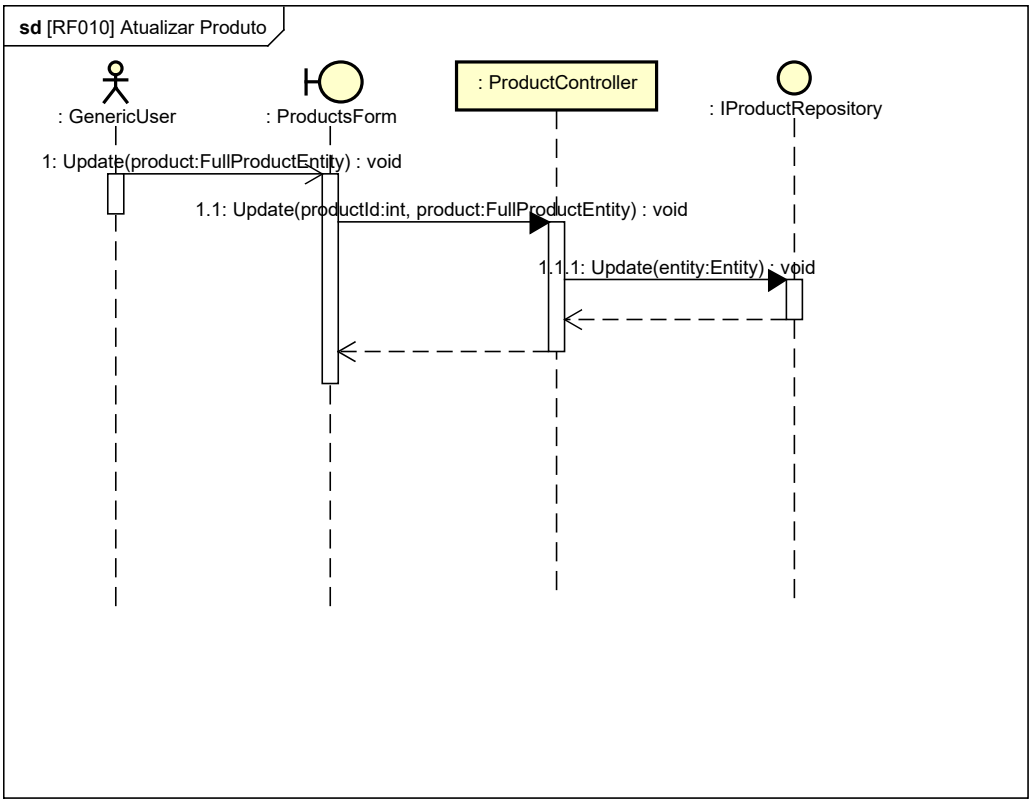
sd [RF010] Atualizar Produto
: GenericUser
: ProductsForm
: ProductController
: IProductRepository
1: Update(product:FullProductEntity) : void
1.1: Update(productId:int, product:FullProductEntity) : void
1.1.1: Update(entity:Entity) : void

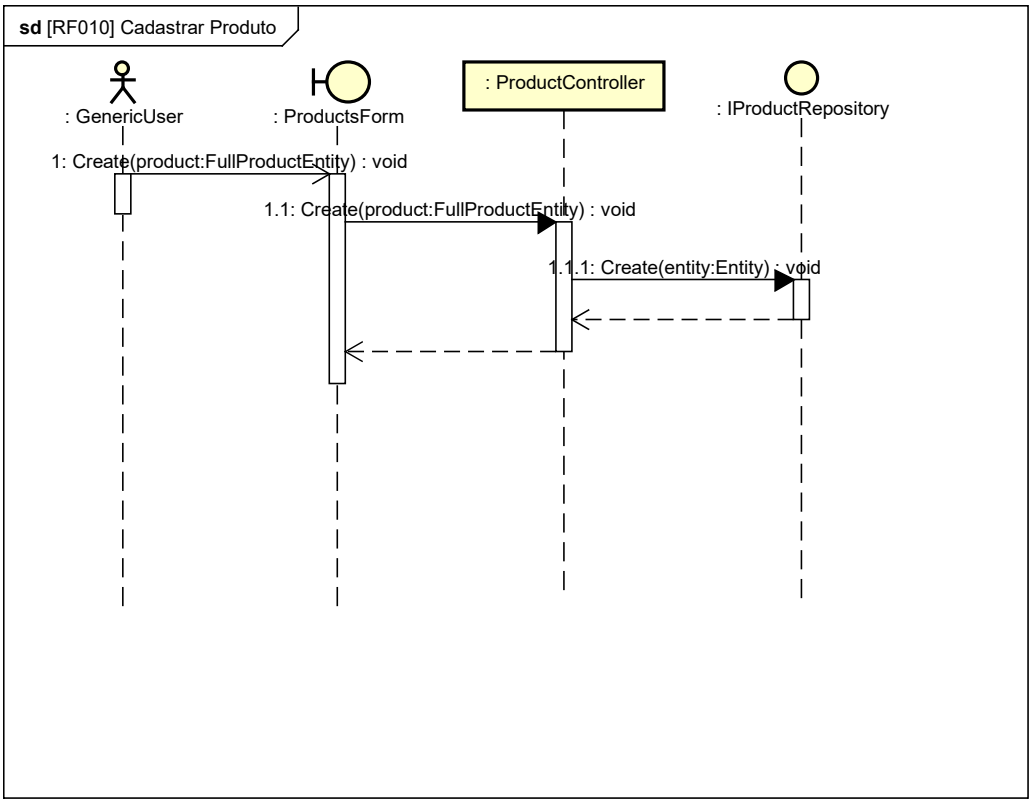
sd [RF010] Cadastrar Produto
: GenericUser
: ProductsForm
: ProductController
: IProductRepository
1: Create(product:FullProductEntity) : void
1.1: Create(product:FullProductEntity) : void
1.1.1: Create(entity:Entity) : void

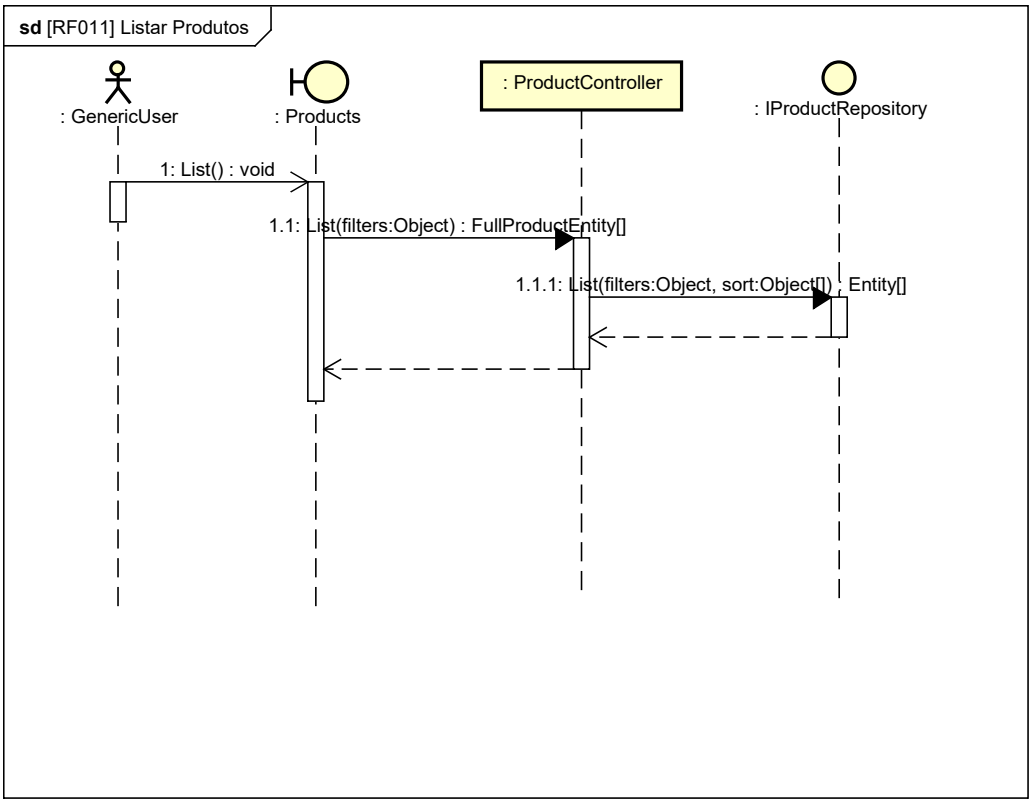
sd [RF011] Listar Produtos
: GenericUser
: Products
: ProductController
: IProductRepository
1: List() : void
1.1: List(filters:Object) : FullProductEntity[]
1.1.1: List(filters:Object, sort:Object[]) : Entity[]

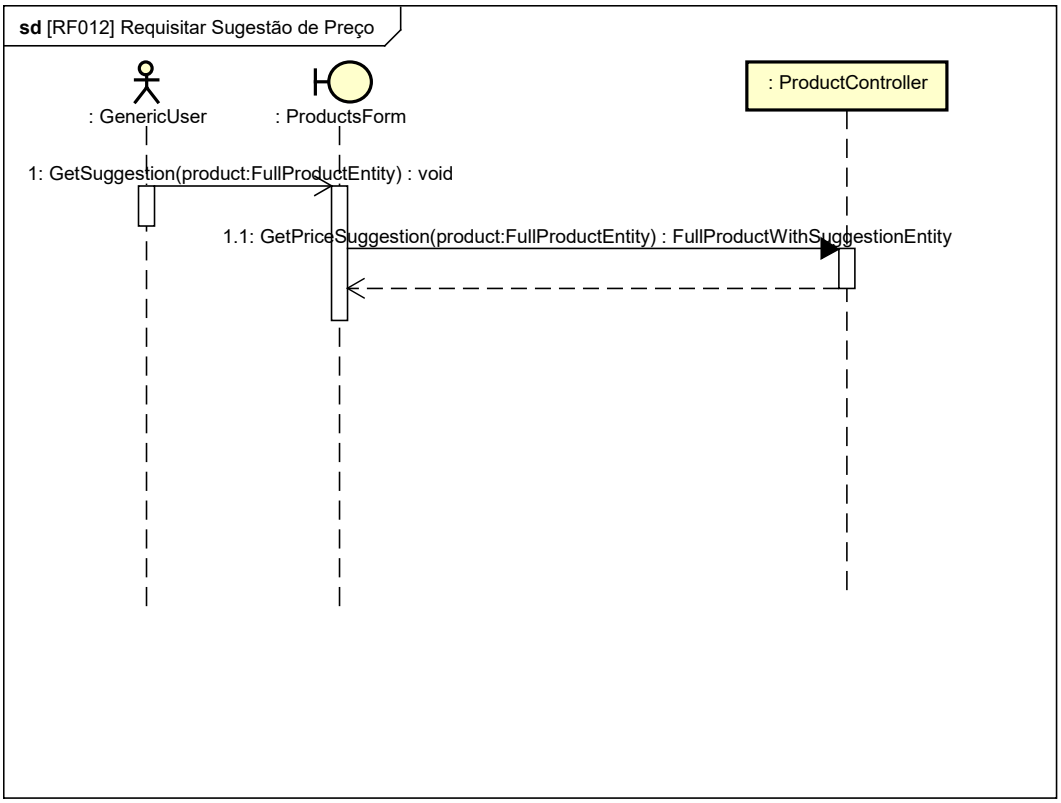
sd [RF012] Requisitar Sugestão de Preço
: GenericUser
: ProductsForm
: ProductController
1: GetSuggestion(product:FullProductEntity) : void
1.1: GetPriceSuggestion(product:FullProductEntity) : FullProductWithSuggestionEntity

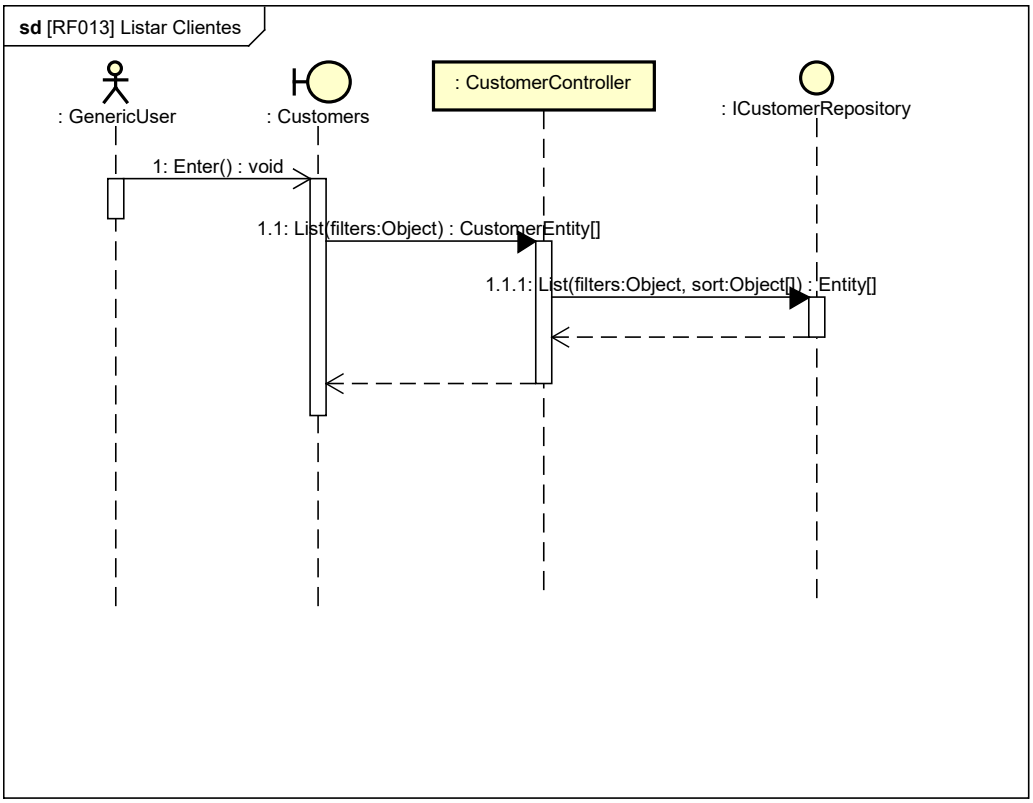
sd [RF013] Listar Clientes
: GenericUser
: Customers
: CustomerController
: ICustomerRepository
1: Enter() : void
1.1: List(filters:Object) : CustomerEntity[]
1.1.1: List(filters:Object, sort:Object[]) : Entity[]

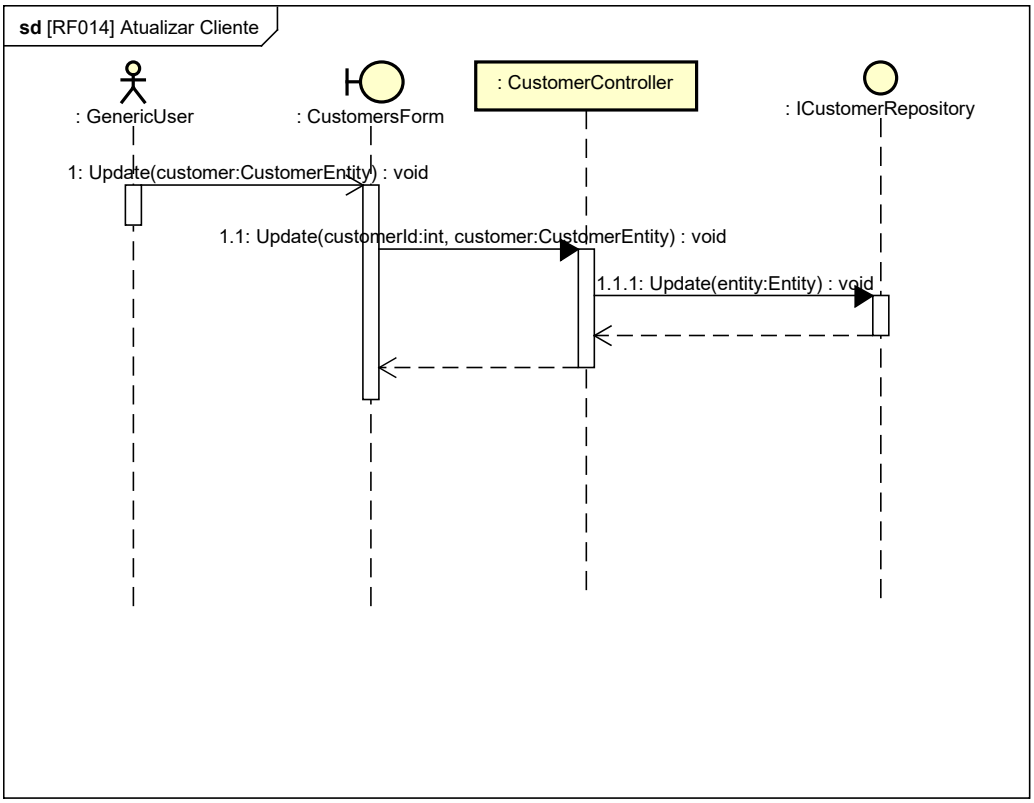
sd [RF014] Atualizar Cliente
: GenericUser
: CustomersForm
: CustomerController
: ICustomerRepository
1: Update(customer:CustomerEntity) : void
1.1: Update(customerId:int, customer:CustomerEntity) : void
1.1.1: Update(entity:Entity) : void

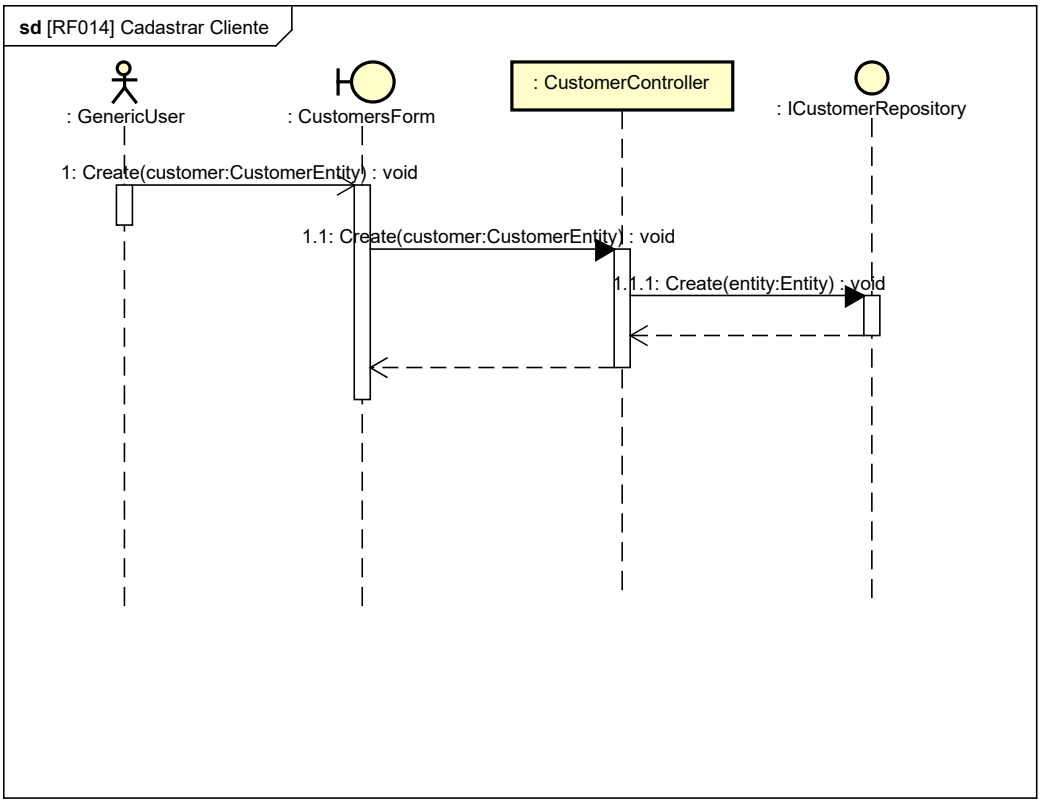
sd [RF014] Cadastrar Cliente
: GenericUser
: CustomersForm
: CustomerController
: ICustomerRepository
1: Create(customer:CustomerEntity) : void
1.1: Create(customer:CustomerEntity) : void
1.1.1: Create(entity:Entity) : void

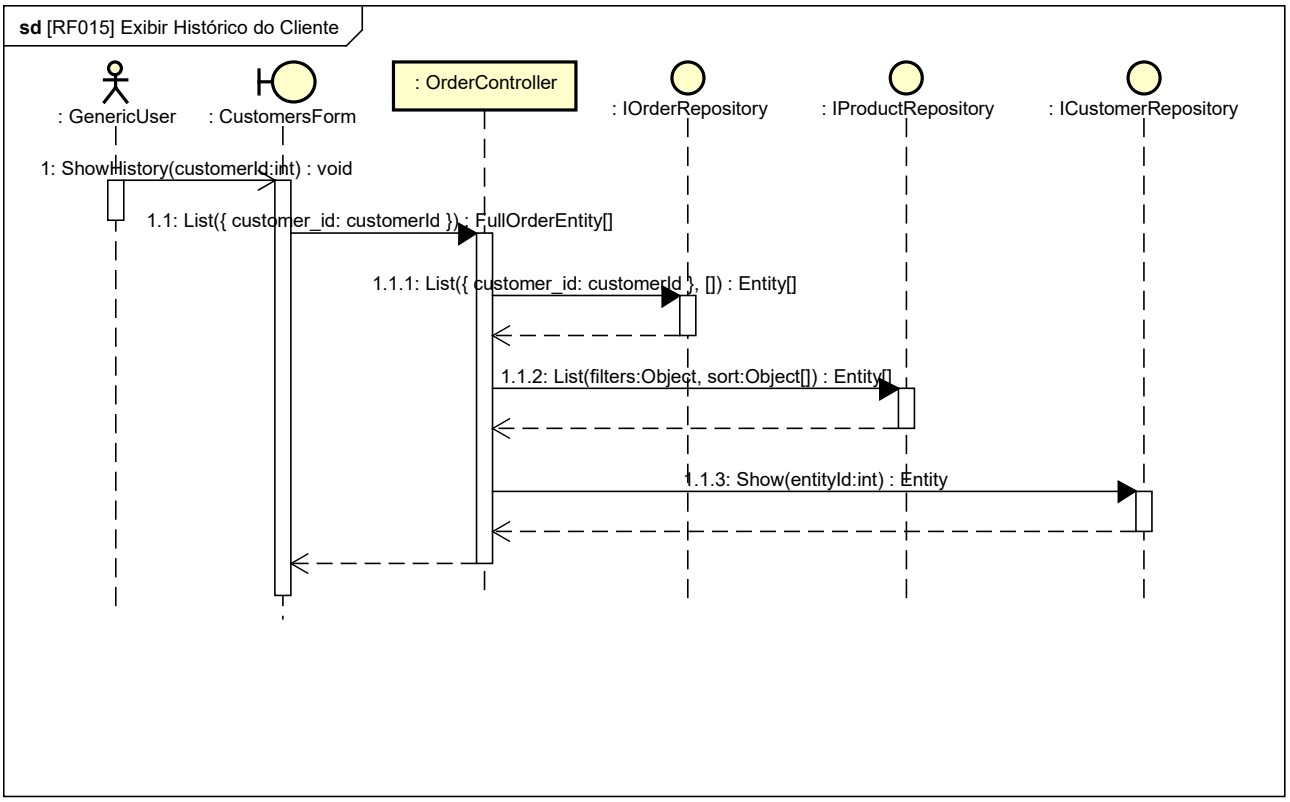
sd [RF015] Exibir Histórico do Cliente
: GenericUser
: CustomersForm
: OrderController
: IOrderRepository
: IProductRepository
: ICustomerRepository
1: ShowHistory(customerId:int) : void
1.1: List({ customer_id: customerId }) : FullOrderEntity[]
1.1.1: List({ customer_id: customerId }, []) : Entity[]
1.1.2: List(filters:Object, sort:Object[]) : Entity[]
1.1.3: Show(entityId:int) : Entity

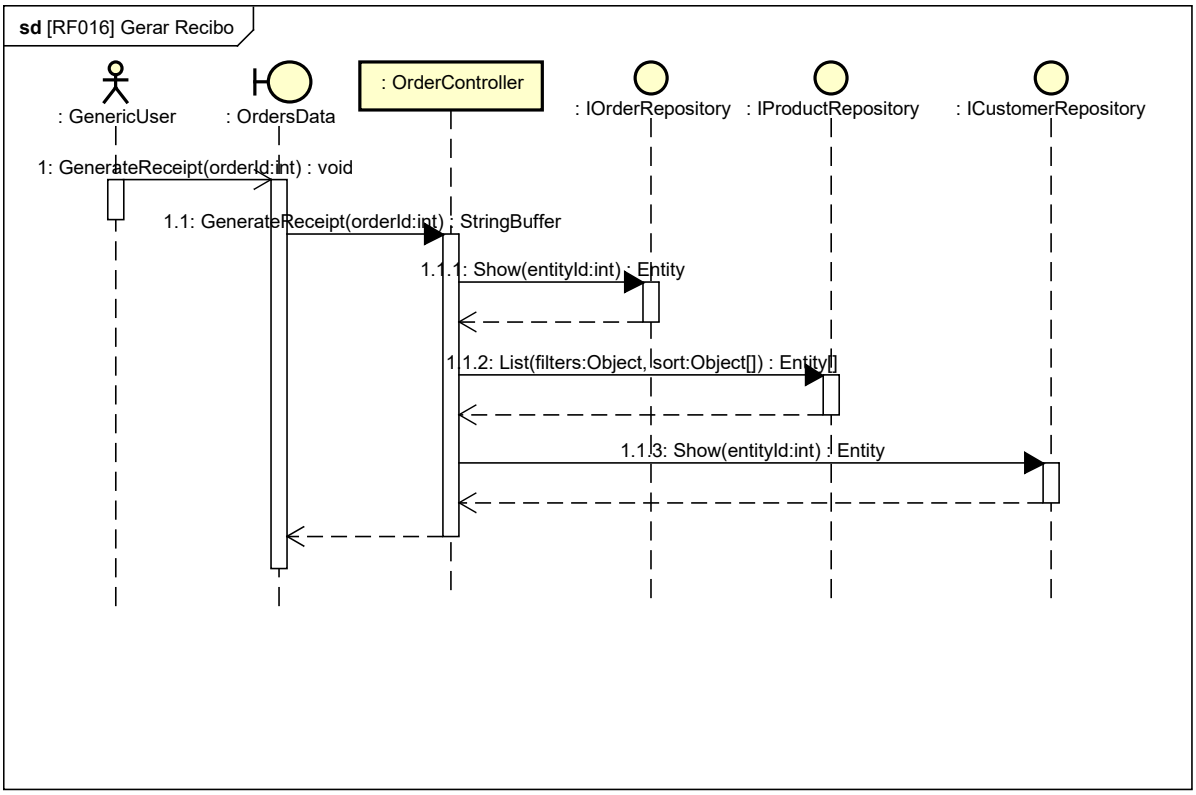
sd [RF016] Gerar Recibo
: GenericUser
: OrdersData
: OrderController
: IOrderRepository
: IProductRepository
: ICustomerRepository
1: GenerateReceipt(orderId:int) : void
1.1: GenerateReceipt(orderId:int) : StringBuffer
1.1.1: Show(entityId:int) : Entity
1.1.2: List(filters:Object, sort:Object[]) : Entity[]
1.1.3: Show(entityId:int) : Entity