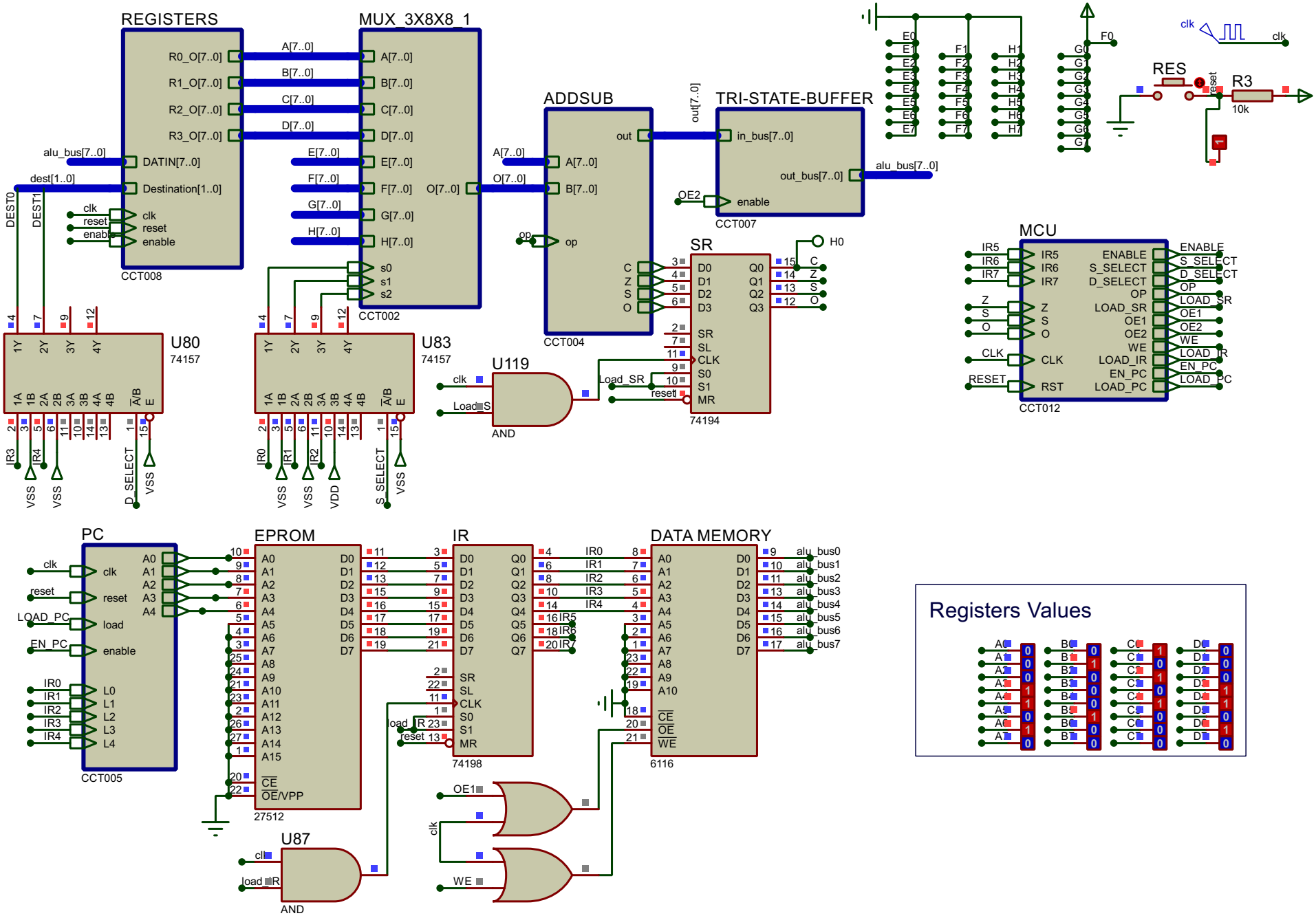
REGISTERS
R0_O[7..0]
R1_O[7..0]
R2_O[7..0]
R3_O[7..0]
alu_bus[7..0]
DATIN[7..0]
dest[1..0]
Destination[1..0]
DEST0
DEST1
clk
reset
enable
CCT008
MUX_3X8X8_1
A[7..0]
B[7..0]
C[7..0]
D[7..0]
E[7..0]
F[7..0]
G[7..0]
H[7..0]
O[7..0]
s0
s1
s2
CCT002
ADDSUB
out
op
CCT004
out[7..0]
TRI-STATE-BUFFER
in_bus[7..0]
out_bus[7..0]
OE2
CCT007
SR
D0
D1
D2
D3
Q0
Q1
Q2
Q3
SL
CLK
S0
S1
MR
74194
H0
Load_SR
U80
74157
U83
74157
U119
AND
MCU
IR5
IR6
IR7
Z
S
O
CLK
RESET
ENABLE
S_SELECT
D_SELECT
OP
LOAD_SR
OE1
OE2
WE
LOAD_IR
EN_PC
LOAD_PC
CCT012
RES
R3
10k
PC
load
L0
L1
L2
L3
L4
CCT005
EPROM
27512
IR
74198
DATA MEMORY
6116
U87
AND
Registers Values