ELEC_237 EXPERIMENT 4 – Bipolar Transistor Basics– REPORT

Prepared by:

Alevnaz Bal 220102002056

Muhammet Ali Ayvaz 210102002078

1.Component Familiarization and Identification

1.1 Establishing Device Currents (npn):

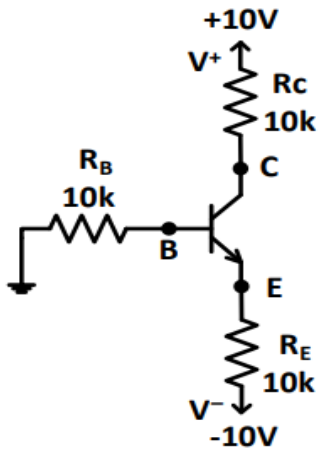

Figure 1. A flexible biasing circuit.

In the initial phase of this experiment, a basic circuit incorporating a Bipolar Junction Transistor (BJT) was constructed to examine the operating principles of transistors. The objective was to gain a fundamental understanding of how BJTs function and their role in electronic circuits. By measuring the current and voltage values between the emitter, base, and collector terminals, the characteristics of the transistor were analyzed. The data obtained provided valuable insights into the behavior of the transistor, forming a critical foundation for making informed decisions in the design of more complex electronic circuits in future applications. The measured values are presented in Table 1.

Table 1. Operating points of the BJT in Figure 1.

VB	V_C	V_E	*VBE*	I_B	I_C	I_E	*α*	*β*
-26 .61mV	*- 0.6237V*	*0.67V*	*0.63V*	*- 2.61mA*	*- 0.623mA*	*0.67mA*	*- 0.929A*	*0.2386*

1.2 Identifying the Controlling Junction and Junction Current:

Step 1.2 was designed to investigate the behavior of the transistor under varying supply voltages. In this step, the V- and V+ voltage levels were adjusted to observe the BJT's response. This process is essential for understanding the transistor's sensitivity to voltage variations and assessing how these changes influence the controlling junction and junction currents. The findings provide significant insights into optimizing the BJT for stability and reliability in electronic circuit applications. Accordingly, the measured values are presented in Table 2.

Table 2. Operating points of the BJT in Figure 1 with different supply voltages.

	VB	V_C	V_E	*VBE*	I_B	I_C	I_E	*α*	*β*
V^- = -5V V^+ = +10V	- 11.62mV	5.56V	-0.61V	-0.61V	*- 1.162mA*	*53.6mA*	- 0.61mA	- 0.087	*- 0.046*
V^- = -5V V^+ = +5V	- 12.98mV	606mV	- 631mV	- 612mV	- 1.298mA	- 0.606mA	- 0.631mA	0.96	*- 0.46*

Understanding the voltage-dependent behavior of transistors is critical, as their performance is highly influenced by fluctuations in supply voltage. This step enables the observation of the BJT’s reaction to different voltage levels, offering insight into its operational limits and sensitivity. Such analysis is particularly useful in guiding the selection of appropriate voltage ranges for reliable performance. By evaluating the transistor’s behavior under varied conditions, optimal parameters can be identified for specific applications. For instance, in amplifier design, knowing the voltage levels at which the transistor maintains stable and efficient operation is essential for achieving desired performance.

2.Other, Less-Stable Biasing Schemes

2.1 Base-Current Bias:

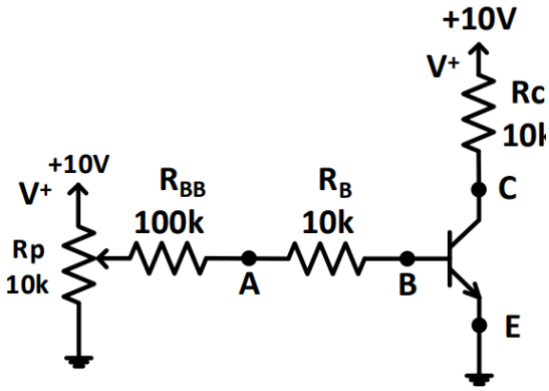

Figure 2. A bad base-current-biasing circuit.

In this part of the experiment, the voltage at node C was first adjusted to +5V by carefully tuning the resistance of the potentiometer RP. Once the desired voltage was achieved, the voltages at nodes A and B were measured using a digital voltmeter (DVM) to evaluate the circuit's initial operating conditions. Following this, while continuously monitoring the voltage at node C, the transistor was gently heated to observe the impact of temperature on its operation. A noticeable change in VC was recorded, indicating the transistor's sensitivity to thermal variations. Subsequently, the transistor was carefully removed from the circuit and replaced with a different one, ensuring that the potentiometer setting remained unchanged. The voltage measurements at nodes A and B were repeated with the new transistor, followed by another heating process to observe any variation in VC. The results obtained from all measurements and observations in this procedure are presented in Table 3.

Table 3. Operating points of BJT in Figure 2 under different temperature conditions.

Node Voltage	Transistor 1	Transistor 2
V_A	0.3620V	0.615V
V_B	228mV	0.4937V
V_{C_cold}	4.930V	5.172V
V_{C_hot}	2.62V	2.32V

Bipolar Junction Transistors (BJTs) are sensitive to temperature changes, which affect their intrinsic properties, particularly the barrier potential. As temperature

increases, the barrier potential decreases, leading to a reduction in base-emitter voltage (VBE). This allows more current (IC) to flow at lower voltages, making the transistor more "open." Consequently, the internal resistance of the transistor decreases, causing a drop in collector-emitter voltage (VC). If improper or weak biasing is used, this can negatively impact circuit stability and reliability. Therefore, biasing schemes are critical in transistor design, as they influence the transistor's performance in varying temperature and environmental conditions. Proper biasing helps improve the transistor's resistance to thermal fluctuations, enhancing overall circuit stability and performance, which is crucial for sensitive applications and high-power scenarios.

2.2 Fixed Base-Emitter-Voltage Biasing:

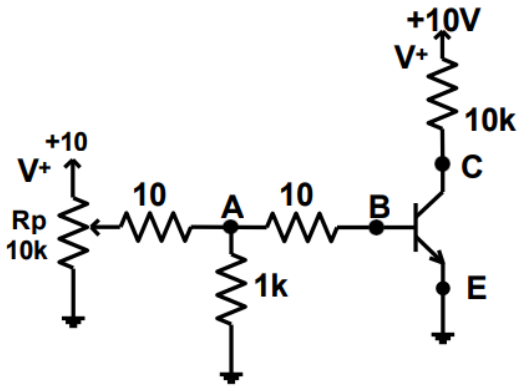

Figure 3. A bad base-voltage-biasing circuit.

The voltage at node C was measured and adjusted by tuning the potentiometer RP until VC reached +5V. Subsequently, the voltages at nodes A and B were measured using a digital voltmeter (DVM). While monitoring VC, the transistor was heated with a soldering iron (as provided by the teaching assistant). The new value of VC was recorded after the temperature increase. The measurements obtained during this process are presented in Table 4.

Table 4. Operating points of BJT in Figure 3 under different temperature conditions.

VA	0.619V
V_B	0.546V
VC_cold	5.096V
VC_hot	2.78V

When transistors are heated, the collector-emitter voltage (VC) decreases due to several interconnected physical phenomena. First, the barrier potential (VBE) at the base-emitter junction decreases as temperature rises, as the semiconductor's energy band gap narrows, allowing more current to flow at the same voltage. Second, the transistor's internal resistance decreases with increasing temperature, leading to a

higher total current (IC) and a larger voltage drop, which reduces VC. Lastly, increased temperature boosts the mobility of charge carriers, allowing electrons and holes to move faster, further increasing current flow and contributing to the drop in VC. These effects collectively explain why VC decreases with rising temperature, impacting circuit stability and performance.

3.The BJT as Amplifier

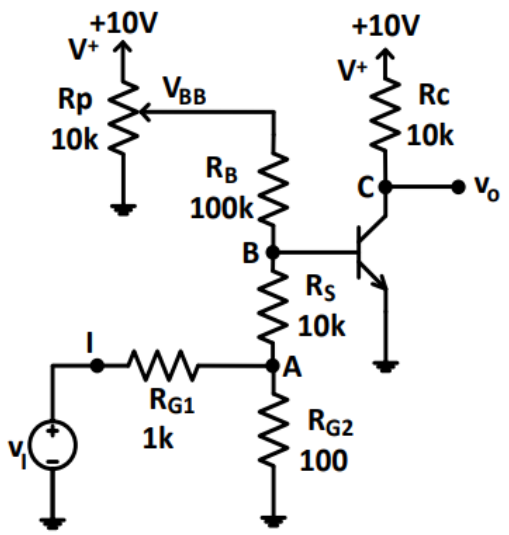

Figure 4. A badly-biased but otherwise-interesting amplifier.

3.1 Voltage Gain and Input Resistance:

The circuit was connected as shown in Figure 4, and the measurements were taken sequentially. First, with the input signal (vi) open, the potentiometer RP was adjusted to achieve a DC voltage of 5V at node C. The exact value of VC was recorded as VC =5.037V. Next, the waveform generator was connected to node I, and vi was set as a sine wave at 1 kHz. The input signal amplitude was adjusted using both channels of the oscilloscope until the output at node C displayed a sine wave with a 2V peak-to-peak (Vpp) amplitude, with the input signal's peak-to-peak value noted as vi =6.6382Vpp. Finally, the peak-to-peak values of the signals at nodes A and B were measured, with va = 179mVpp and vb = 88mVpp recorded accordingly.

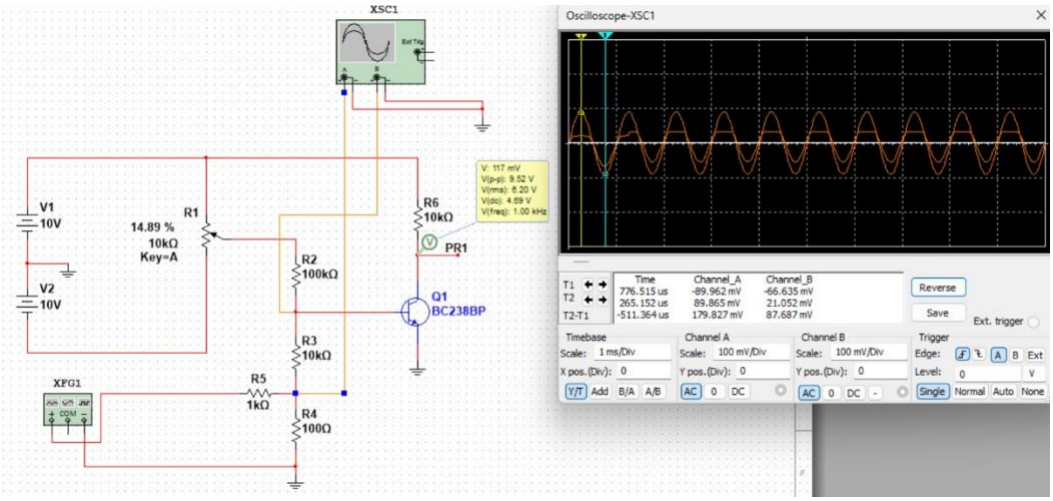

Simulation 1. The measurements for Va and Vb

Calculation Area				
Vo/Vb=5.037/0.088=57.28 Vo/Va=5.037/0.179=28.14 Vo/Vi=5.037/6.6382=0.758 Rinb=Ib/Vb = 134.08kΩ				
v_o/v_b = 57.28V	v_o/v_a = 28.14 V	v_o/v_i = 0.758V	i_b = 656.4nA	R_{inb} = 134.08kΩ

The measurements and analysis in Experiment 3.1 focused on evaluating the voltage gain and input resistance of a transistor amplifier. Results showed that the amplifier provides effective signal amplification, with high voltage gain indicating strong performance and potential for use in applications such as audio and RF systems. The experiment offers valuable insights for improving amplifier design, contributing to the development of more stable and efficient electronic circuits.

3.2 Large Signal Distortion:

Using the same configuration as in Figure 4, the circuit was first adjusted so that the DC voltage at node C was set to VC = 5.00V. The input signal amplitude was then adjusted until the output signal at node C reached a 1V peak-to-peak amplitude, and the input signal was measured as vi = 185mVpp. Both channels were switched to AC coupling to observe the phase difference, and the signals were aligned to determine the relative phase, recorded as Φ = 180°. As the input voltage was gradually increased, the output waveform showed signs of distortion, indicating the onset of gain compression. These observations and all measured values are summarized in Table 6.

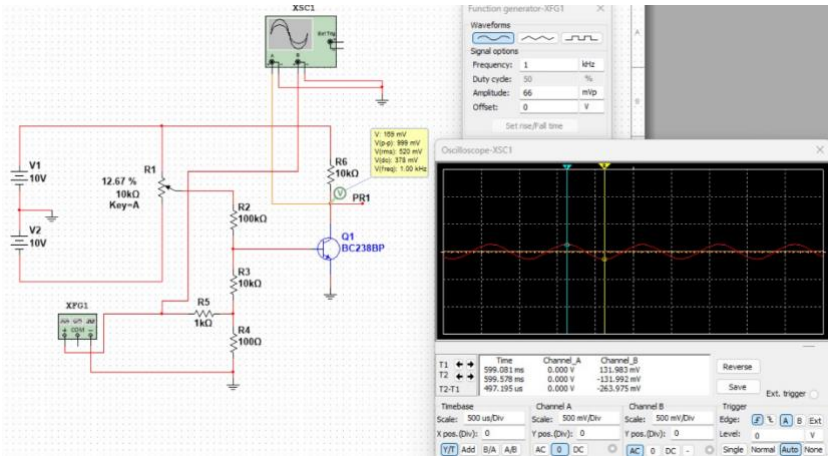

Simulation 2.

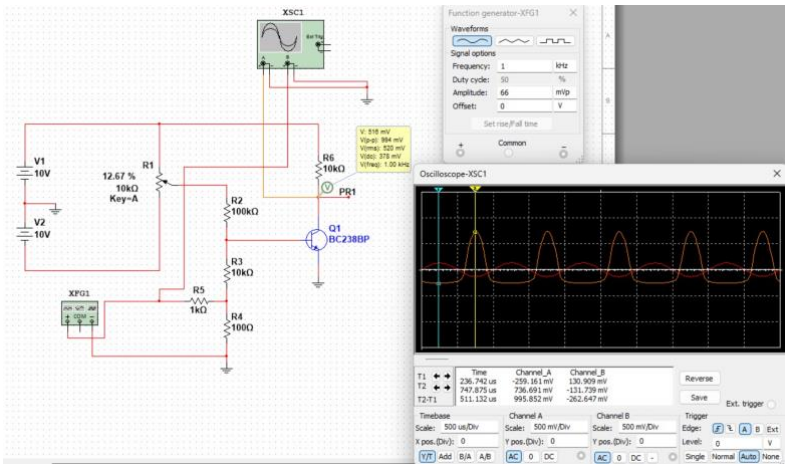

Simulation 3.

Table 6. AC voltage measurements to observe large-signal distortion.

Situation	v_c	v_i	v_b

Gain just changing	$1V_{pp}$	$185mV_{pp}$	$6.88mV_{pp}$

Following the previous configuration, the oscilloscope channel connected to the output node was set to DC coupling, while the input signal was gradually increased. Observations were made to identify the input levels at which the positive and negative peaks of the output waveform began to flatten, indicating the onset of clipping. These critical input values, corresponding to the limits of the amplifier's linear operating region, were carefully noted. All relevant data obtained from this procedure have been recorded and are presented in Table 7.

Table 7. AC voltage measurements to observe output swing of amplifier in Figure4.

	DC Coupling		AC Coupling	
Situation	*vc*		*vi*	*vb*
Pos. peak limit	10Vpp	Pos. peak value: +5 V	$+46.5V_{pp}$	$+1.94V_{pp}$
Neg. peak limit	10Vpp	Neg. peak value: -5 V	$-46.5V_{pp}$	$-1.94V_{pp}$

Experiment 3.2 assesses the amplifier's response to large input signals and the resulting changes in gain. The results provide key insights into the amplifier's stability and performance under high signal conditions, revealing non-linear behaviors and tendencies toward signal distortion. This information is crucial for improving amplifier designs to enhance signal processing capabilities while maintaining signal integrity. Ultimately, the experiment contributes to the development of high-performance electronic systems used in critical applications like audio and video processing.