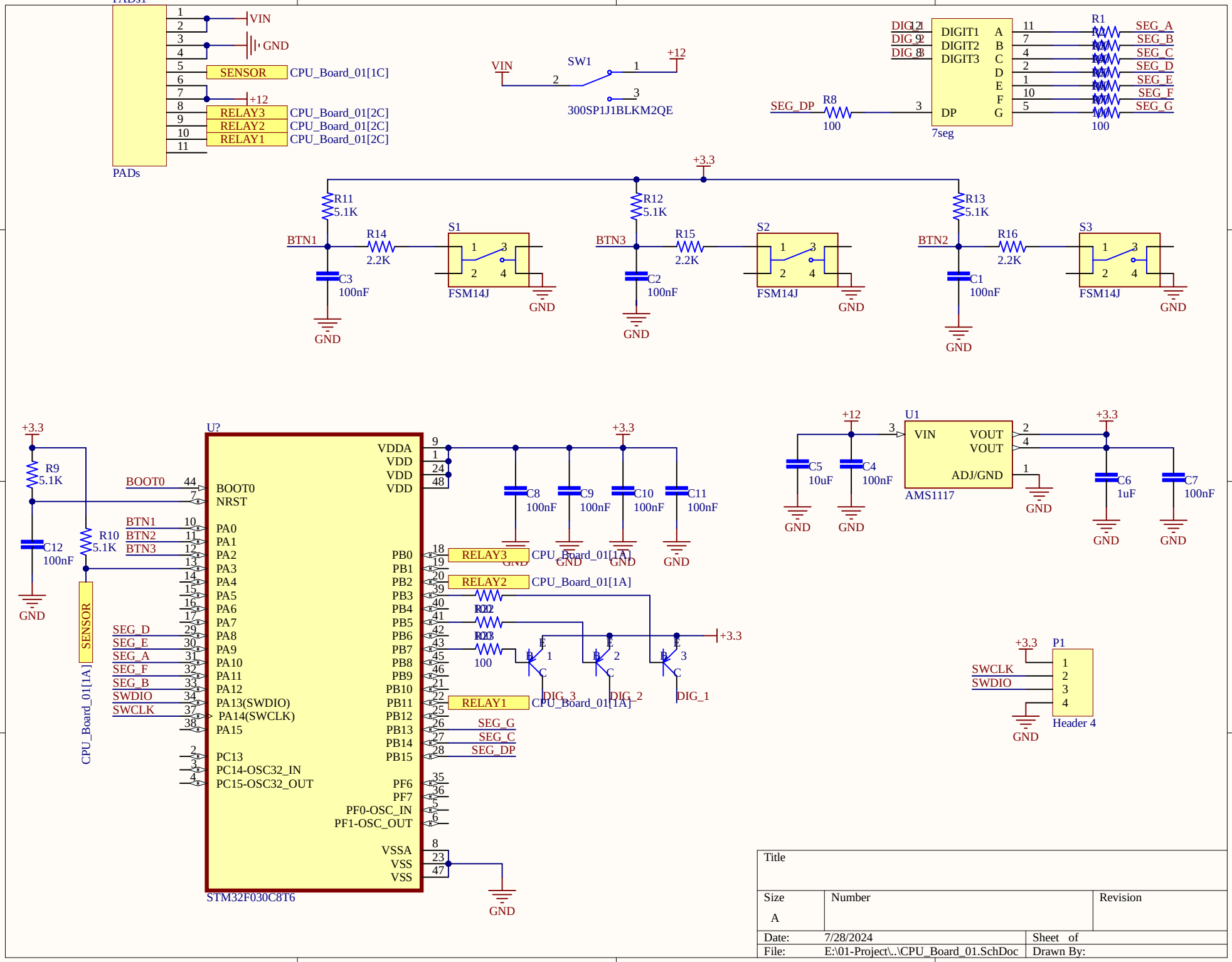
PADs1
PADs
VIN
GND
SENSOR
CPU_Board_01[1C]
+12
RELAY3
RELAY2
RELAY1
CPU_Board_01[2C]
SW1
300SP1J1BLKM2QE
DIGIT1
DIGIT2
DIGIT3
DP
7seg
SEG_A
SEG_B
SEG_C
SEG_D
SEG_E
SEG_F
SEG_G
SEG_DP
R8
100
R1
+3.3
R11
5.1K
R12
5.1K
R13
5.1K
BTN1
BTN3
BTN2
R14
2.2K
R15
2.2K
R16
2.2K
S1
S2
S3
FSM14J
C3
100nF
C2
100nF
C1
100nF
U?
STM32F030C8T6
BOOT0
NRST
PA0
PA1
PA2
PA3
PA4
PA5
PA6
PA7
PA8
PA9
PA10
PA11
PA12
PA13(SWDIO)
PA14(SWCLK)
PA15
PC13
PC14-OSC32_IN
PC15-OSC32_OUT
VDDA
VDD
PB0
PB1
PB2
PB3
PB4
PB5
PB6
PB7
PB8
PB9
PB10
PB11
PB12
PB13
PB14
PB15
PF6
PF7
PF0-OSC_IN
PF1-OSC_OUT
VSSA
VSS
R9
5.1K
R10
5.1K
C12
100nF
C8
100nF
C9
100nF
C10
100nF
C11
100nF
DIG_3
DIG_2
DIG_1
U1
AMS1117
VIN
VOUT
ADJ/GND
C5
10uF
C4
100nF
C6
1uF
C7
100nF
P1
Header 4
SWCLK
SWDIO
Title
Size
A
Number
Revision
Date:
7/28/2024
Sheet of
File:
E:\01-Project\..\CPU_Board_01.SchDoc
Drawn By:

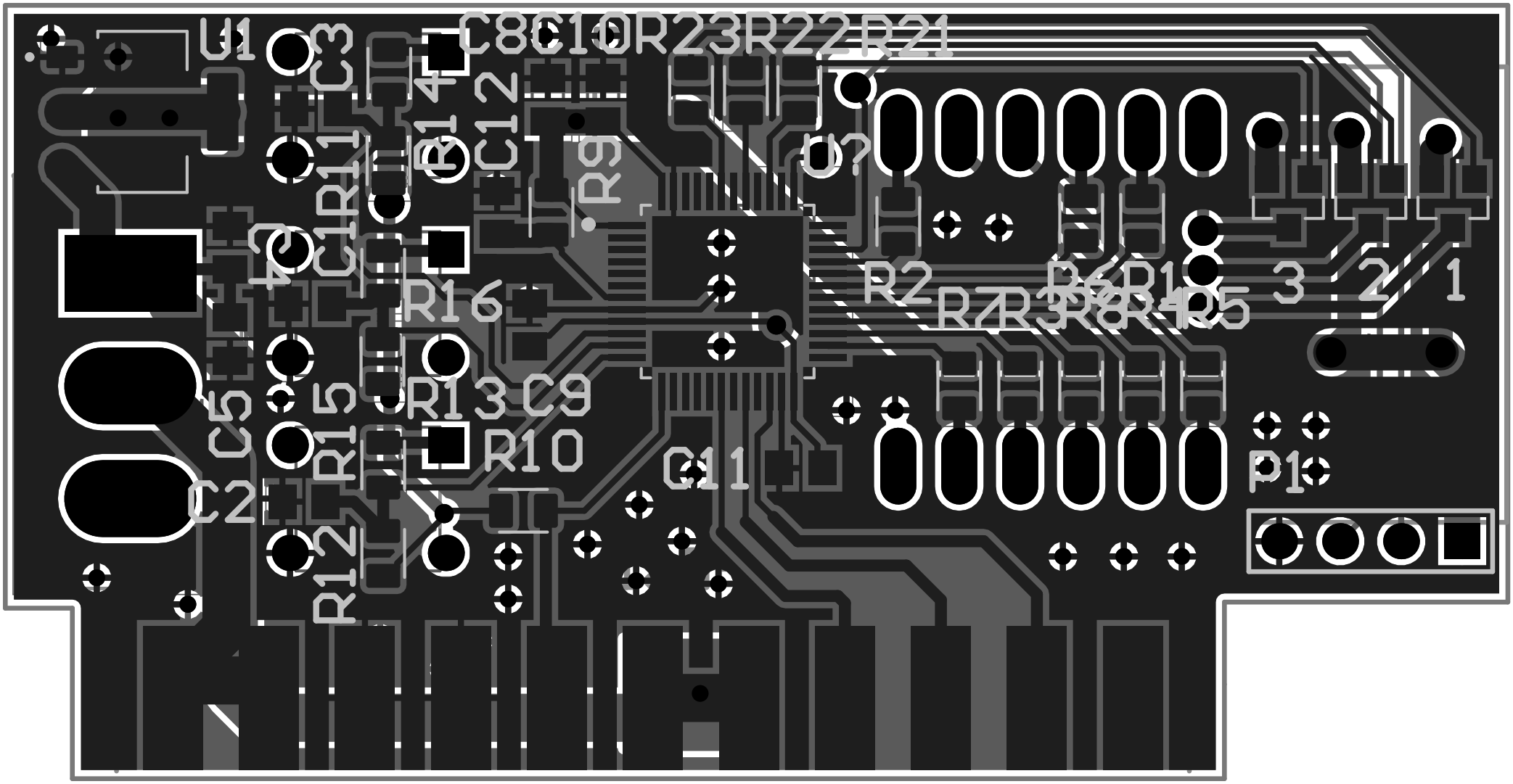
U1
C3
C8
C10
R23
R22
R21
R14
C12
R11
R9
U7
C1
R16
R2
R6
R1
R7
R3
R8
R4
R5
3
2
1
C5
R15
R13
C9
R10
C11
P1
C2
R12