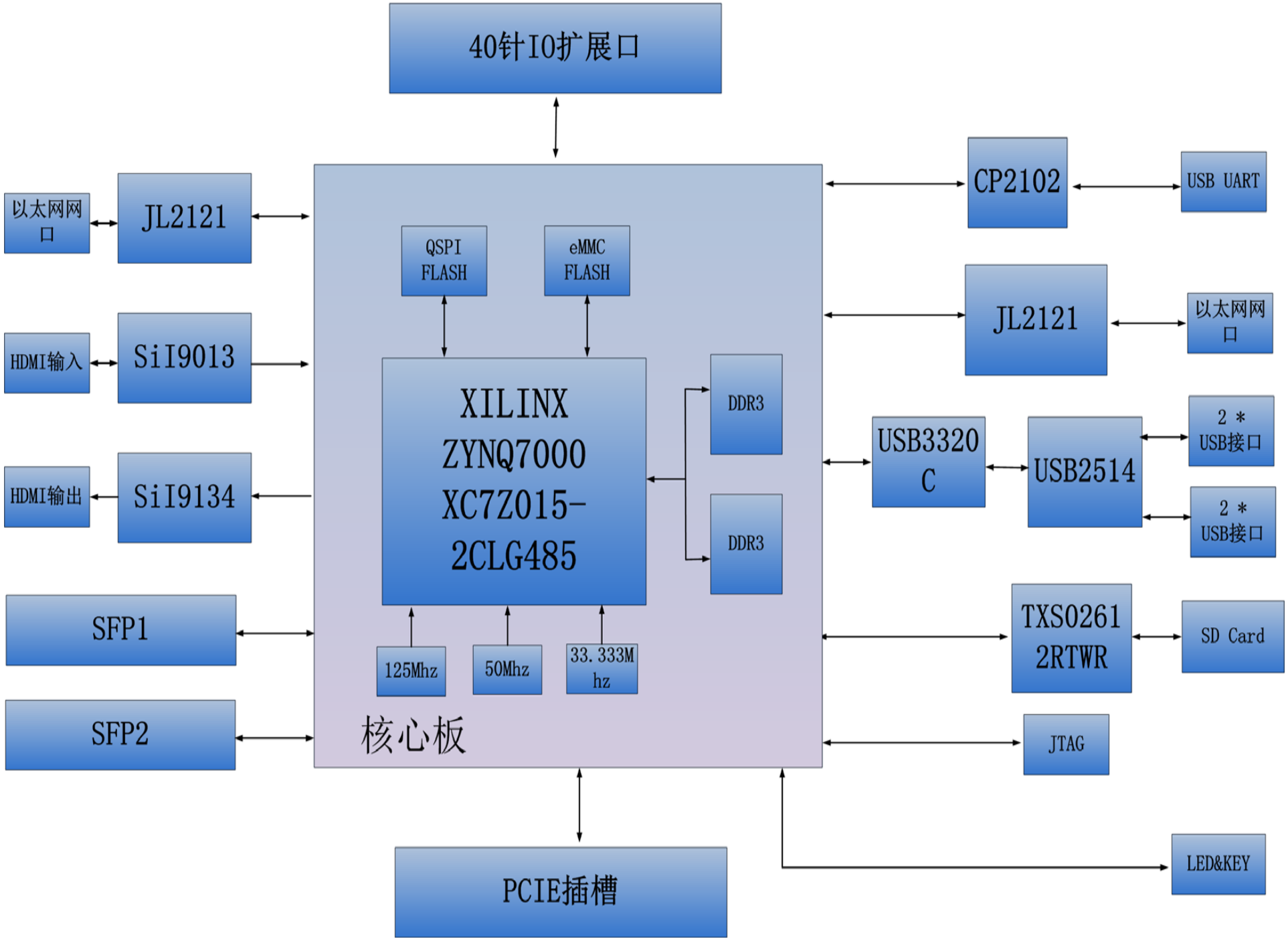

ALINX www.alinx.com

Title	PAGE01 Block Diagram
Size	Document Number: AX7015B 开发板原理图 — Rev 1.0
Date:	Thursday, June 01, 2023 — Sheet 1 of 13

ALINX Confidential

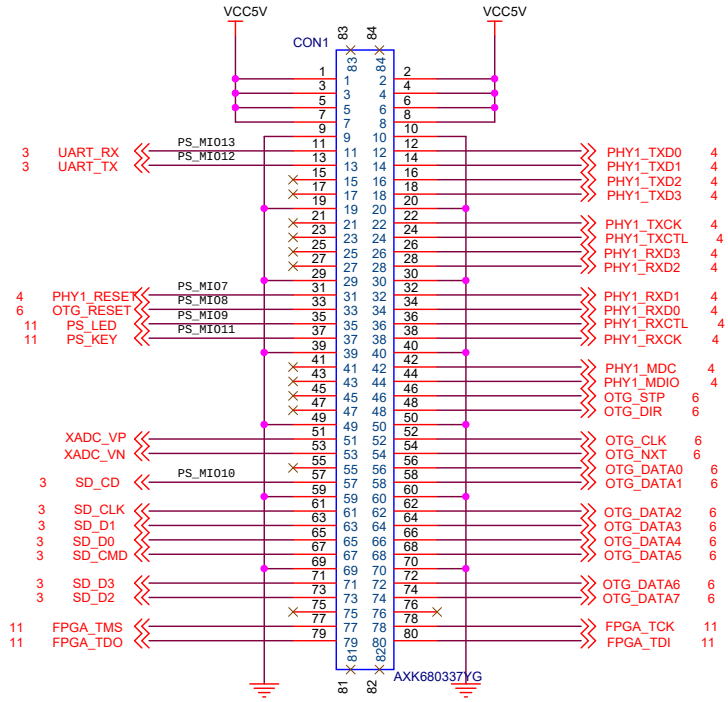

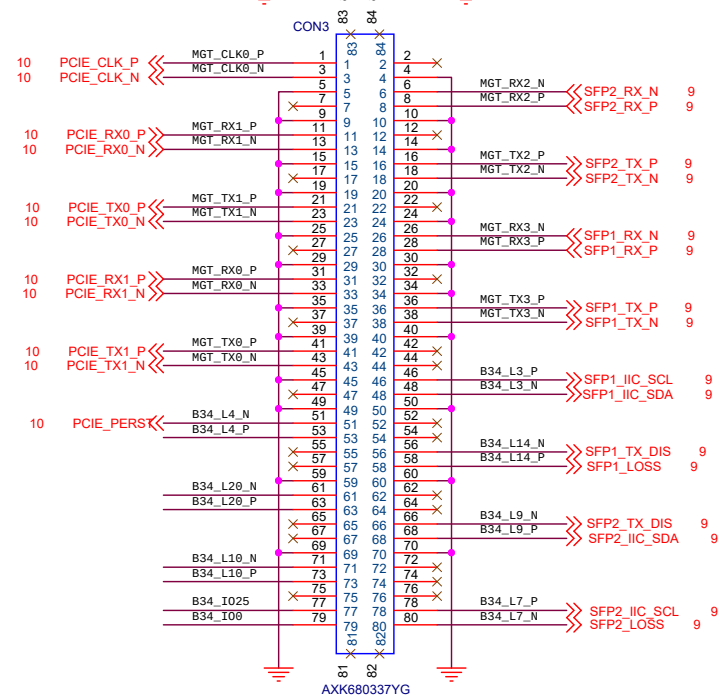

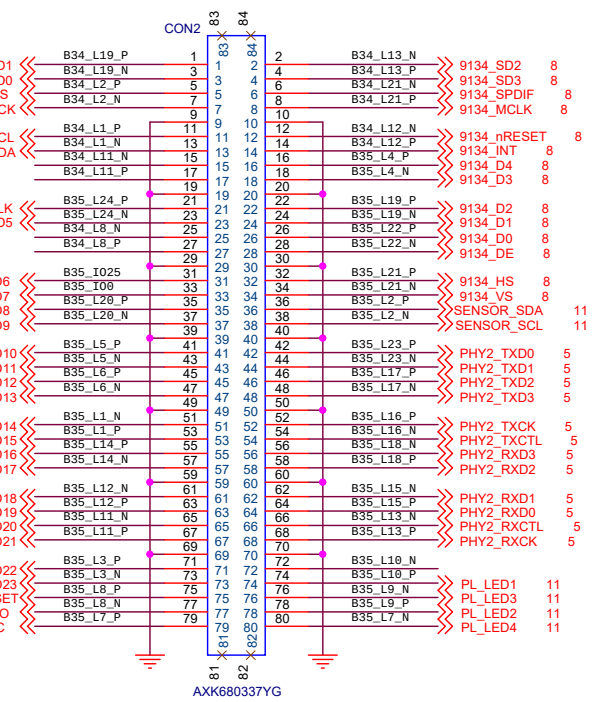

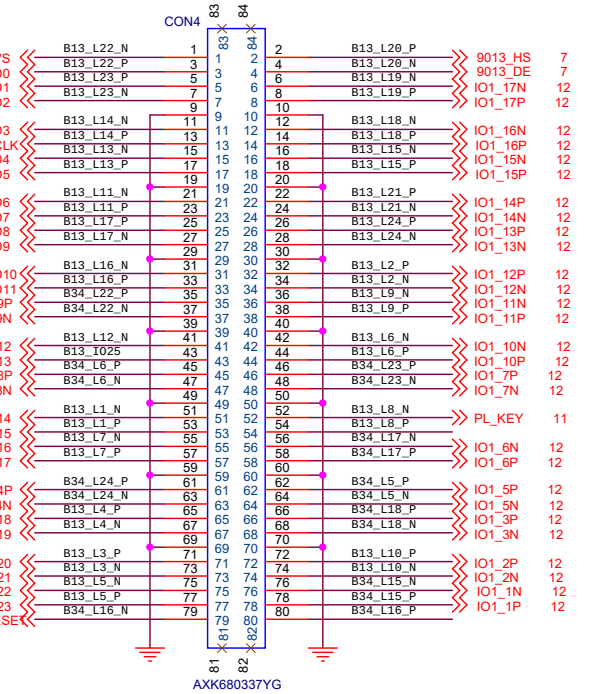

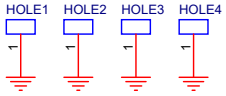

ALINX Confidential

www.alinx.com

Title	PAGE02 Board Connector
Size	Document Number: AX7015B 开发板原理图
Rev	1.0
Date:	Thursday, June 01, 2023
Sheet	2 of 13

USB Uart

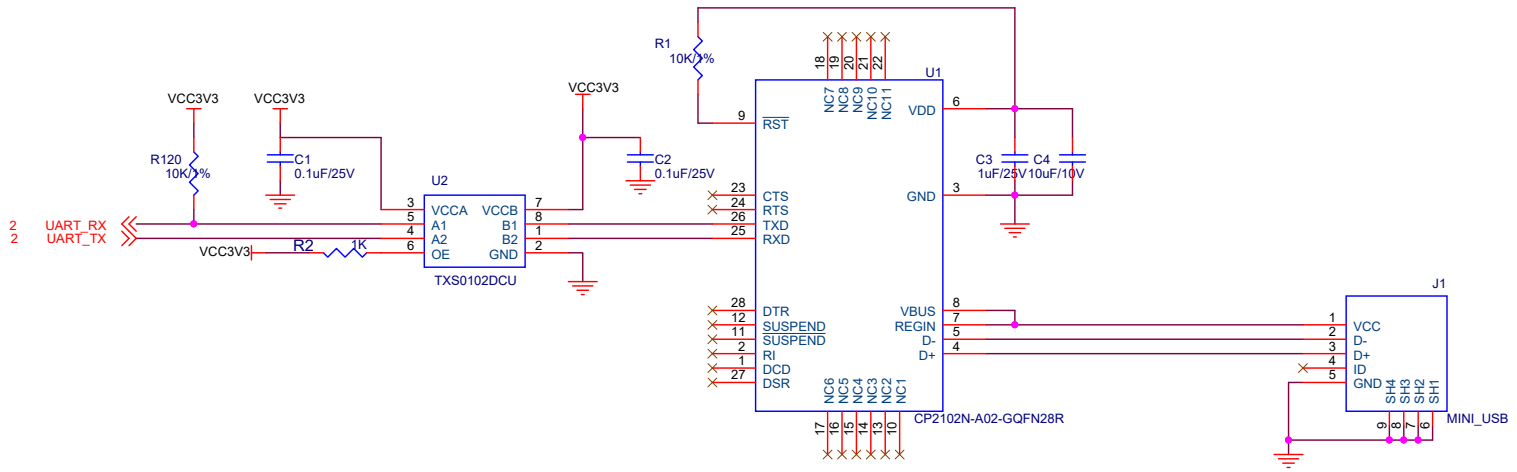

SD Card Connector

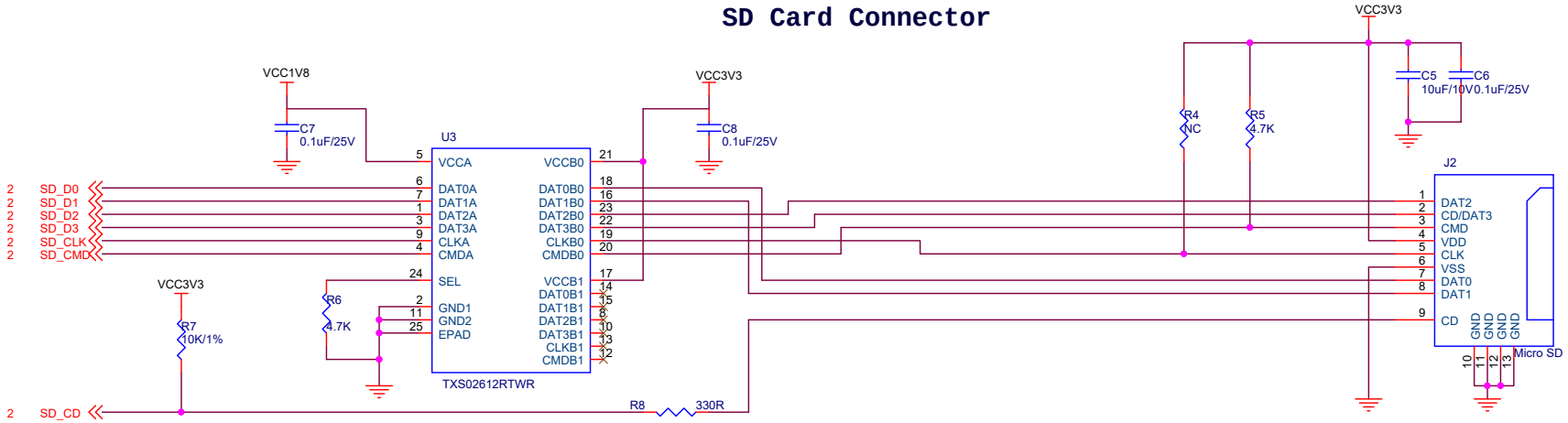

ALINX Confidential

ALINX www.alinx.com

Title: PAGE03 SD Card and UART

Size | Document Number: AX7015B 开发板原理图 | Rev: 1.0

Date: Thursday, June 01, 2023 | Sheet 3 of 13

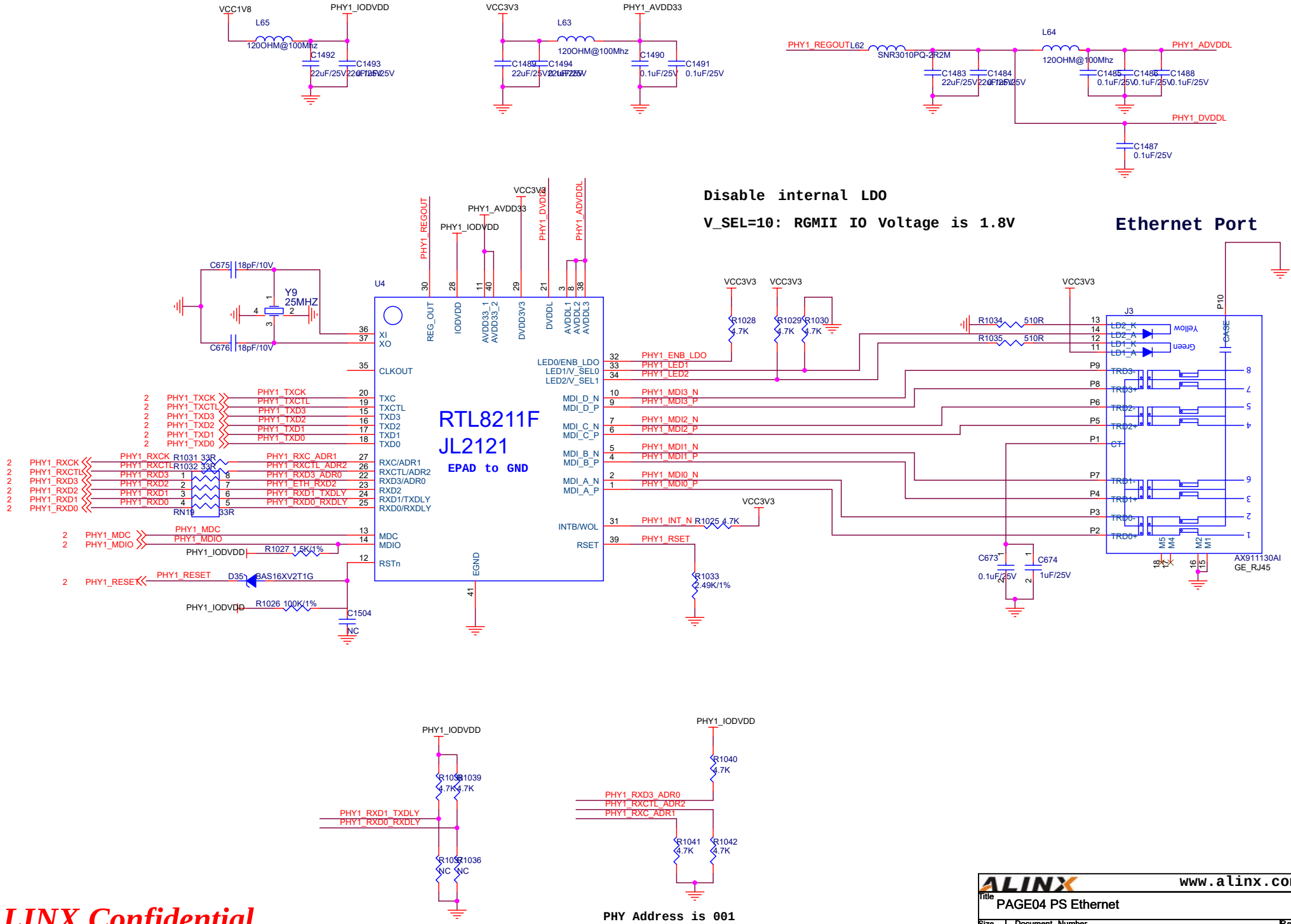
Disable internal LDO
V_SEL=10: RGMII IO Voltage is 1.8V
Ethernet Port
RTL8211F
JL2121
EPAD to GND
PHY Address is 001
AX911130AI
GE_RJ45
ALINX Confidential
www.alinx.com
PAGE04 PS Ethernet
AX7015B 开发板原理图
Rev 1.0
Thursday, June 01, 2023
Sheet 4 of 13

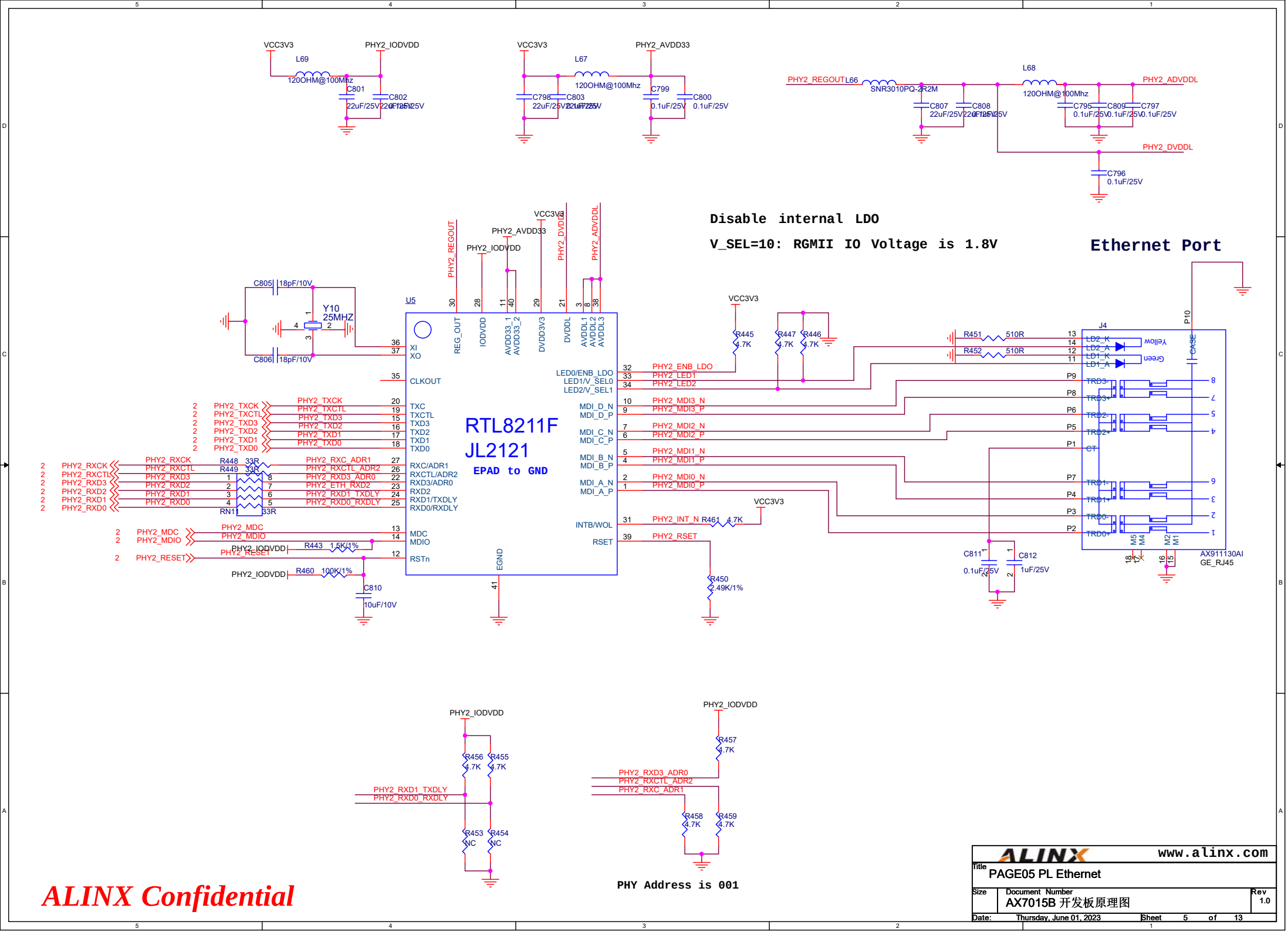

Disable internal LDO
V_SEL=10: RGMII IO Voltage is 1.8V
Ethernet Port
RTL8211F
JL2121
EPAD to GND
U5
Y10
25MHZ
J4
AX911130AI
GE_RJ45
PHY Address is 001
ALINX Confidential
www.alinx.com
Title
PAGE05 PL Ethernet
Size
Document Number
AX7015B 开发板原理图
Rev
1.0
Date: Thursday, June 01, 2023
Sheet 5 of 13

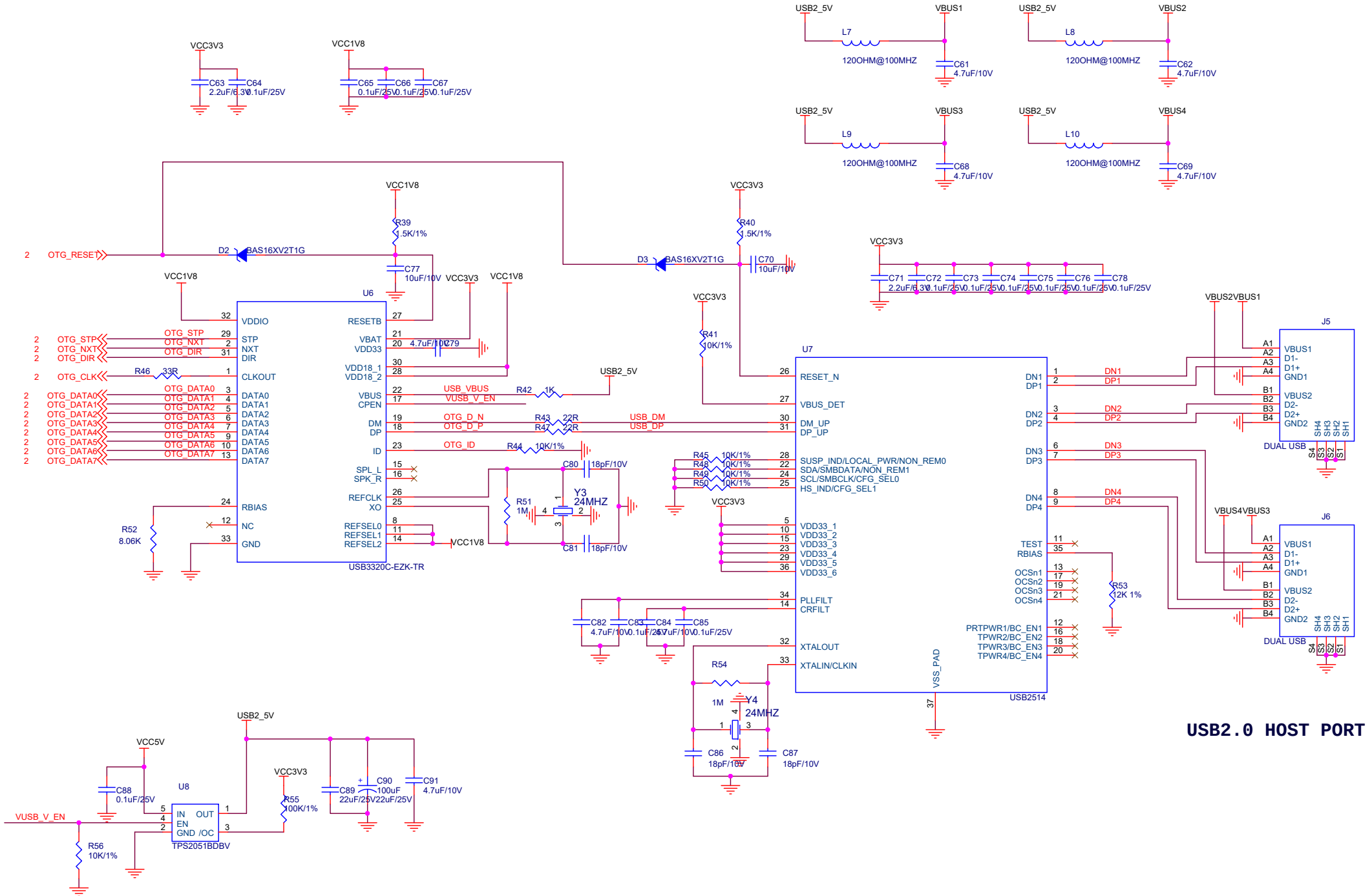

ALINX Confidential

ALINX	www.alinx.com	
Title: PAGE06 USB2.0		
Size	Document Number: AX7015B 开发板原理图	Rev: 1.0
Date: Thursday, June 01, 2023	Sheet 6 of 13	

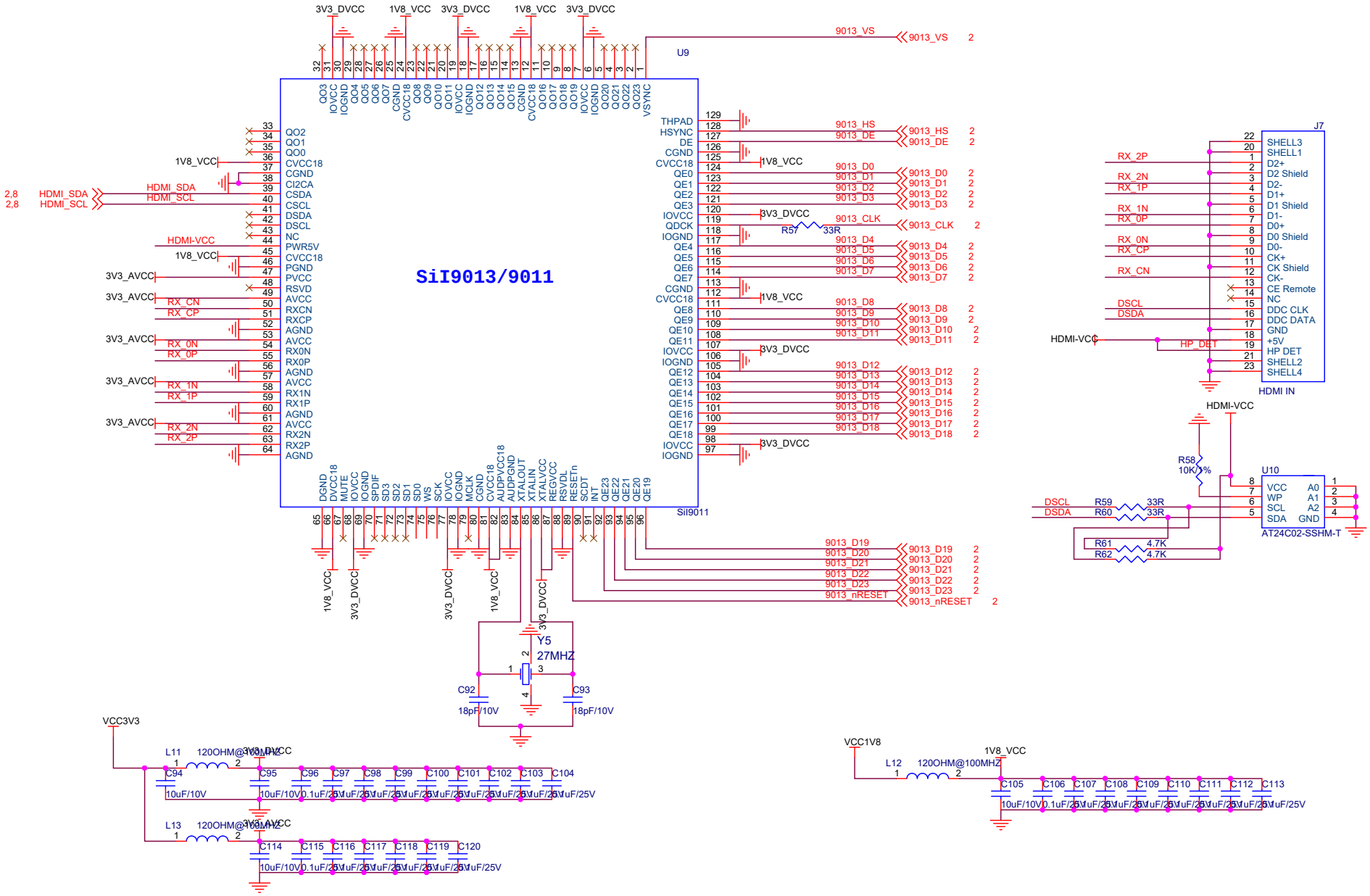

ALINX Confidential

ALINX	www.alinx.com
Title	PAGE07 HDMI_IN
Size	Document Number: AX7015B 开发板原理图
Rev	1.0
Date:	Thursday, June 01, 2023
Sheet	7 of 13

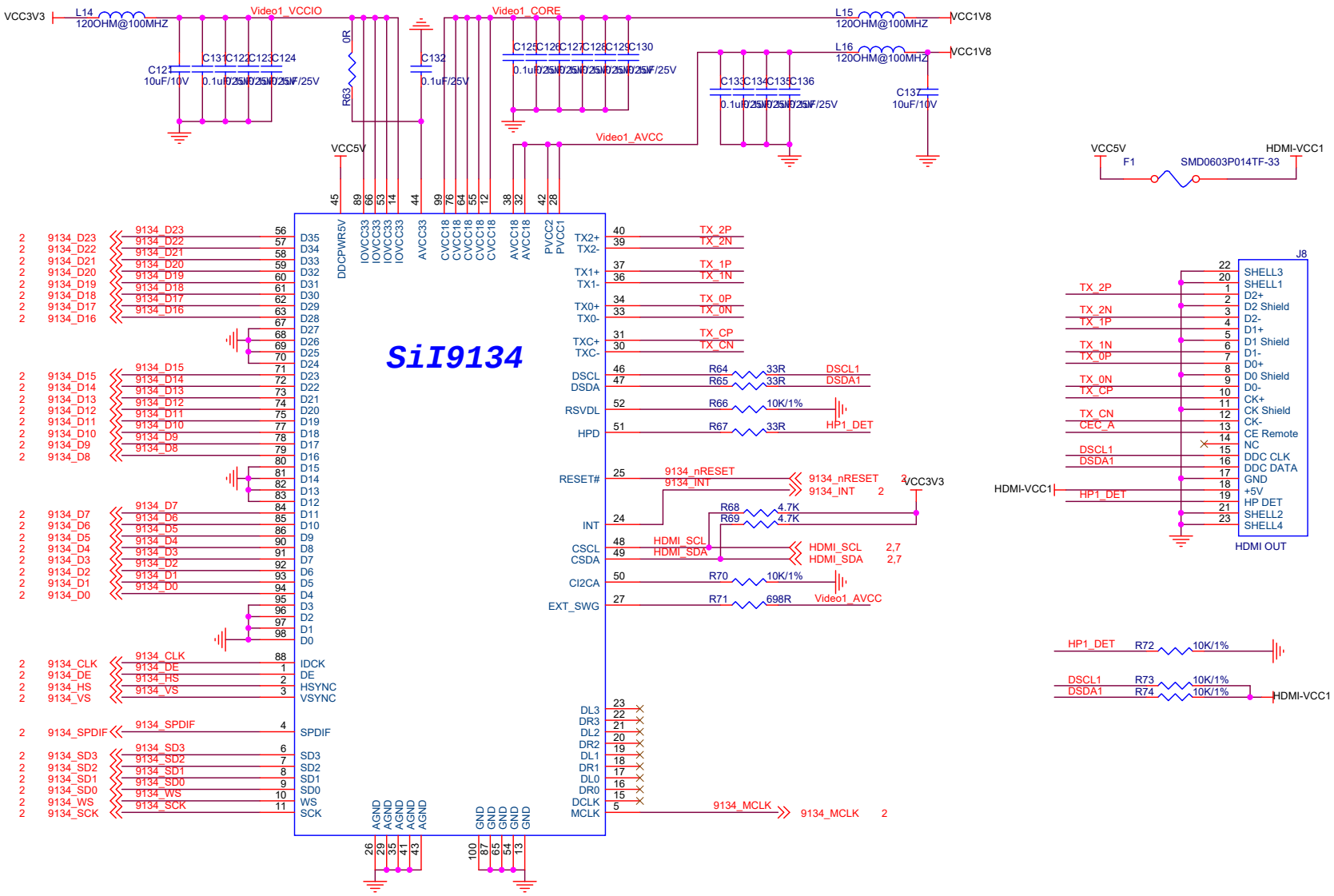

ALINX Confidential

ALINX	www.alinx.com
Title	PAGE08 HDMI OUT
Size	Document Number: AX7015B 开发板原理图
Rev	1.0
Date:	Thursday, June 01, 2023
Sheet	8 of 13

SFP 1

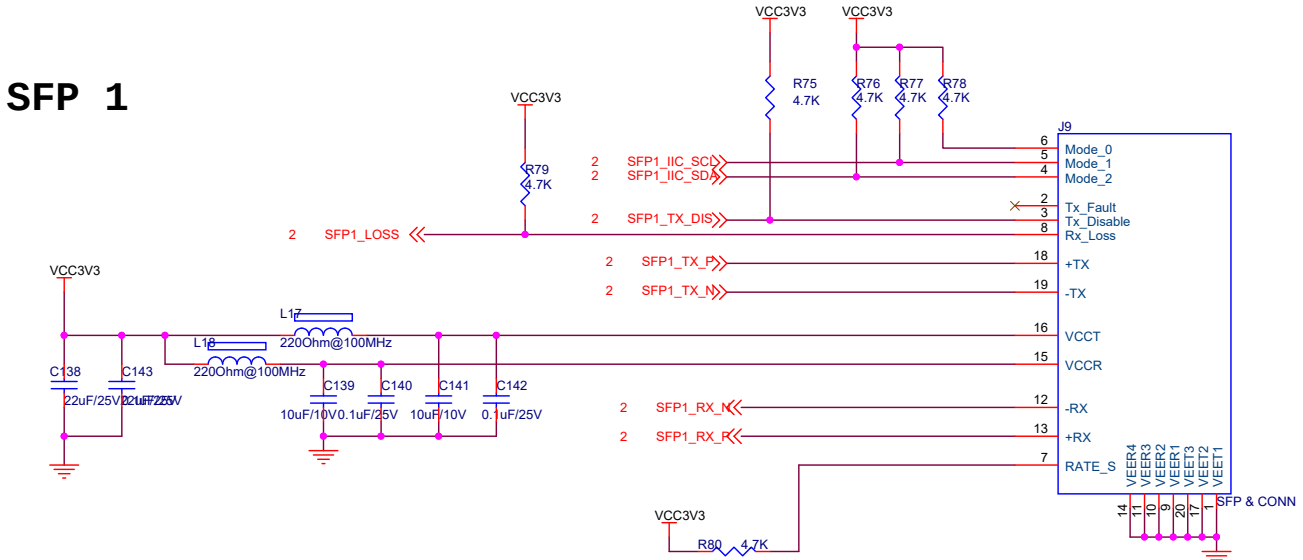

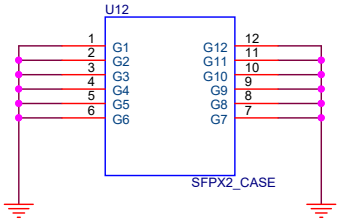

SFP 2

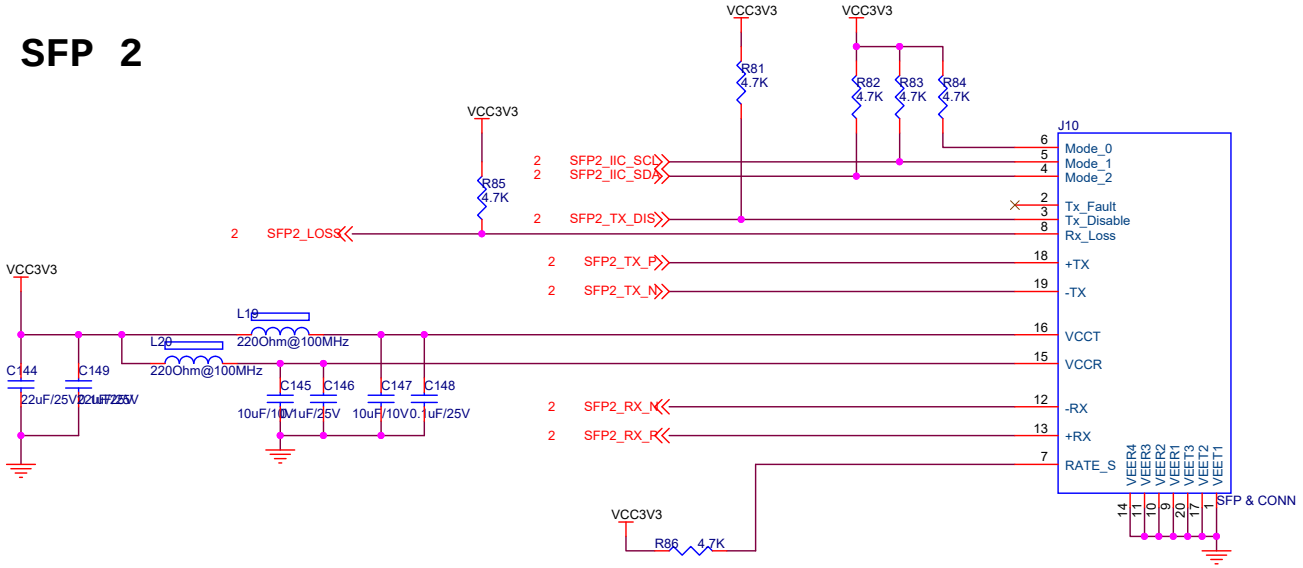

ALINX Confidential

ALINX	www.alinx.com	
Title: PAGE09 SFP1 & SPF2		
Size	Document Number: AX7015B 开发板原理图	Rev: 1.0
Date: Thursday, June 01, 2023	Sheet 9 of 13	

PCIE X2 SLOT

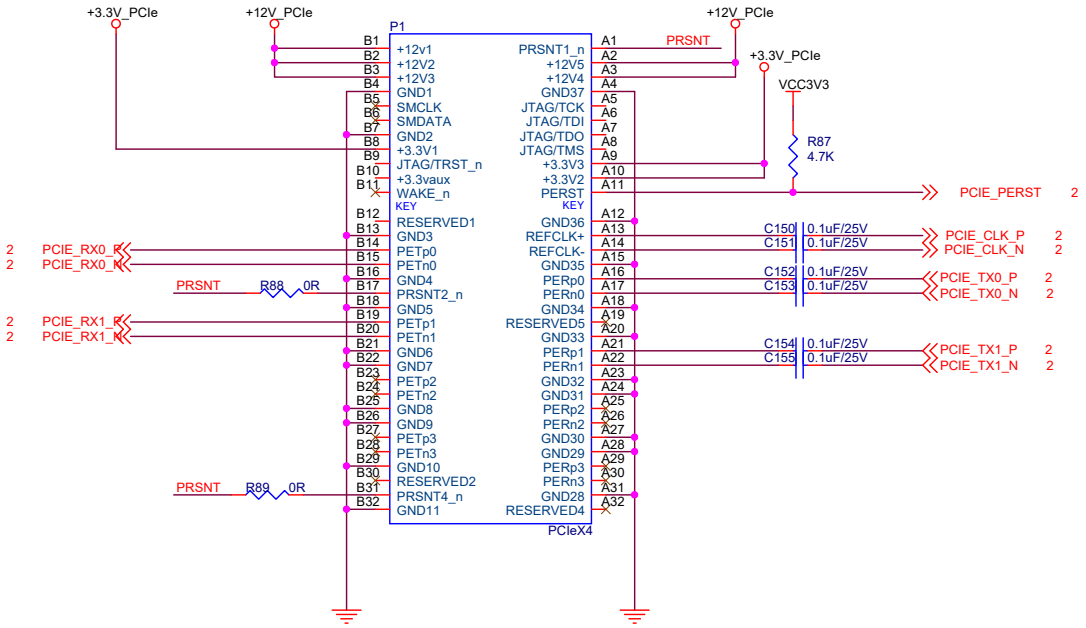

ALINX Confidential

ALINX www.alinx.com

Title: PAGE10 PCIE

Size | Document Number: AX7015B 开发板原理图 | Rev: 1.0

Date: Thursday, June 01, 2023 | Sheet 10 of 13

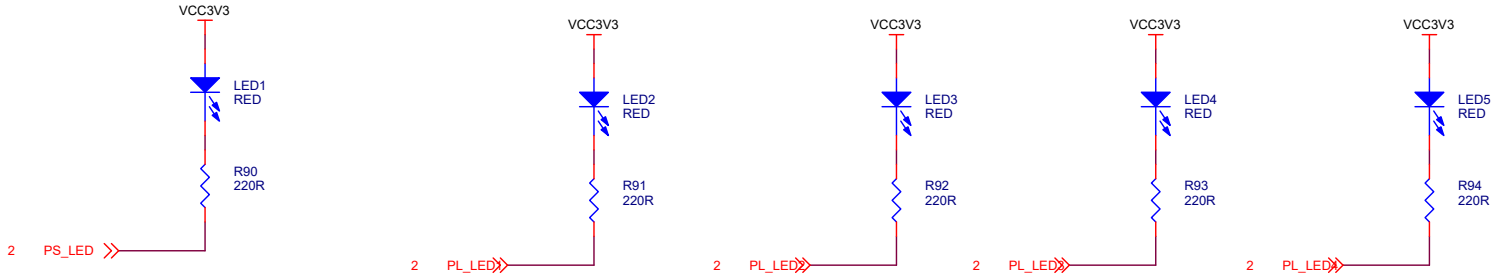

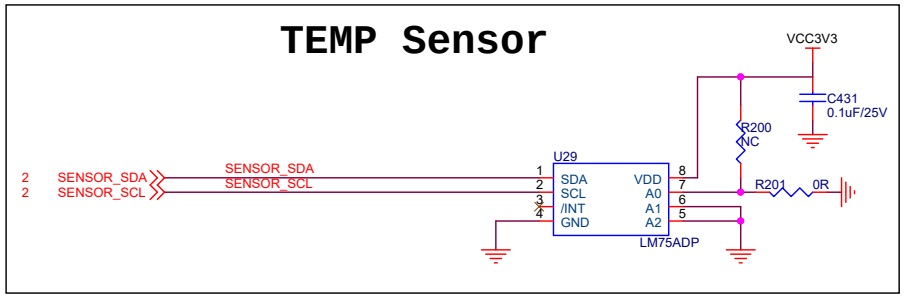

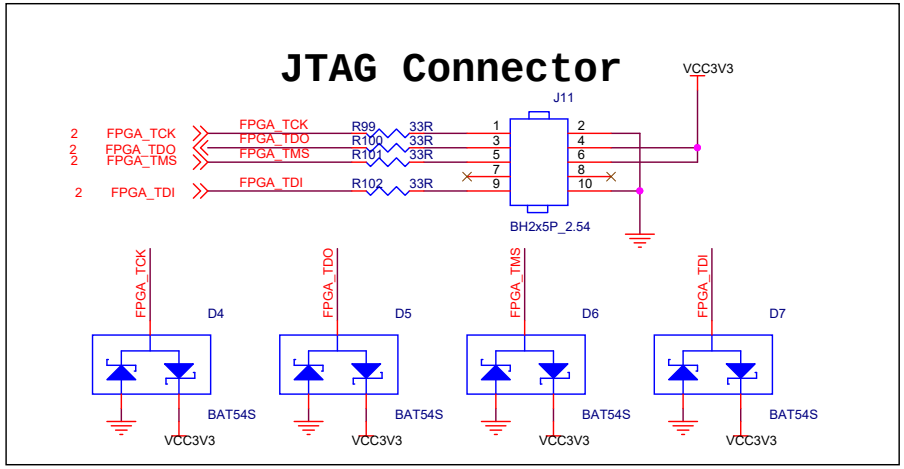

ALINX Confidential

ALINX www.alinx.com

Title: PAGE11 KEY and LED

Size | Document Number: AX7015B 开发板原理图 | Rev: 1.0

Date: Thursday, June 01, 2023 | Sheet 11 of 13

FPGA 40 PIN External IO

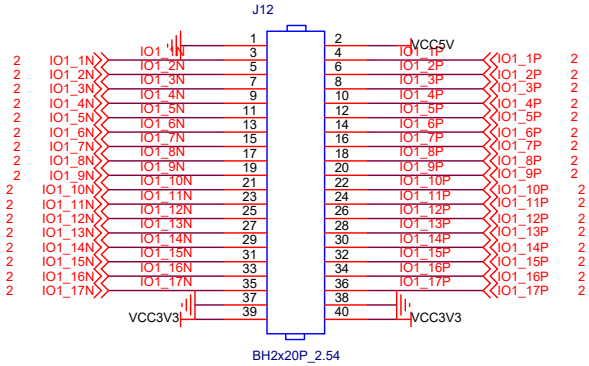

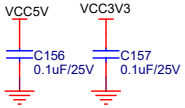

ALINX Confidential

ALINX www.alinx.com

Title: PAGE12 EX Connector		
Size	Document Number: AX7015B 开发板原理图	Rev: 1.0
Date: Thursday, June 01, 2023	Sheet 12 of 13	

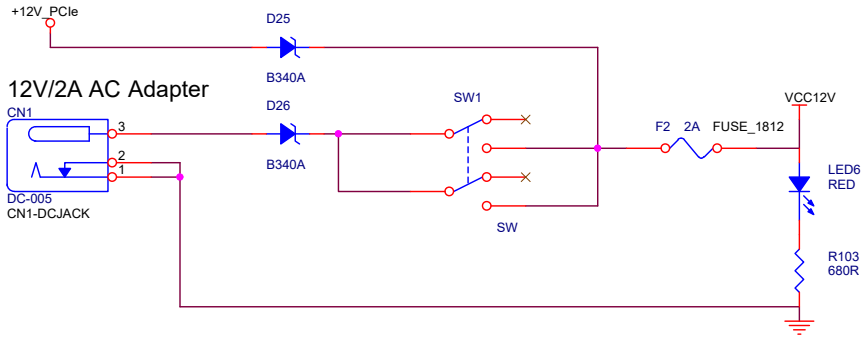

+3.3V POWER

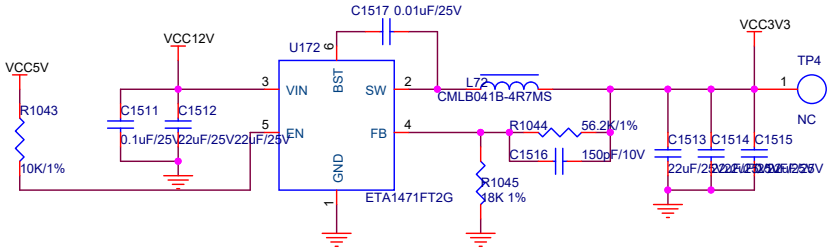

Vout=0.8 x (1 + R1/R2)

+5V POWER

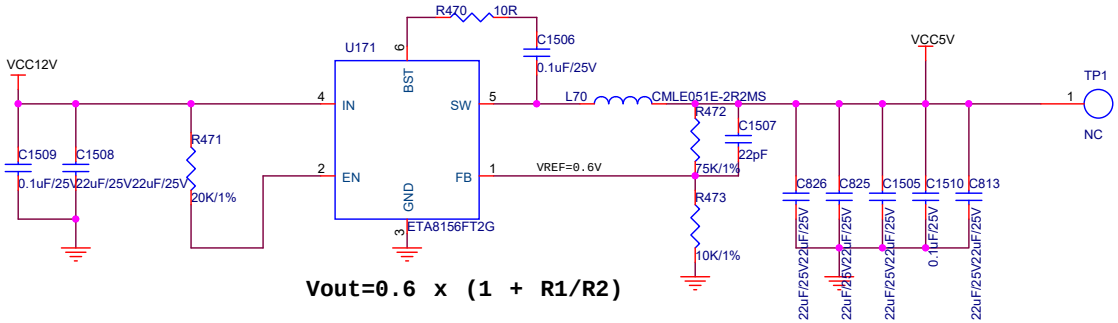

Vout=0.6 x (1 + R1/R2)

+1.8V POWER

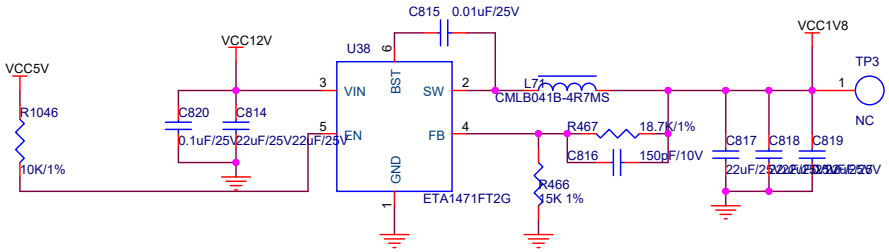

Vout=0.8 x (1 + R1/R2)

ALINX Confidential

ALINX www.alinx.com

Title: PAGE13 Power

Size | Document Number: AX7015B 开发板原理图 | Rev: 1.0

Date: Friday, March 01, 2024 | Sheet 13 of 13