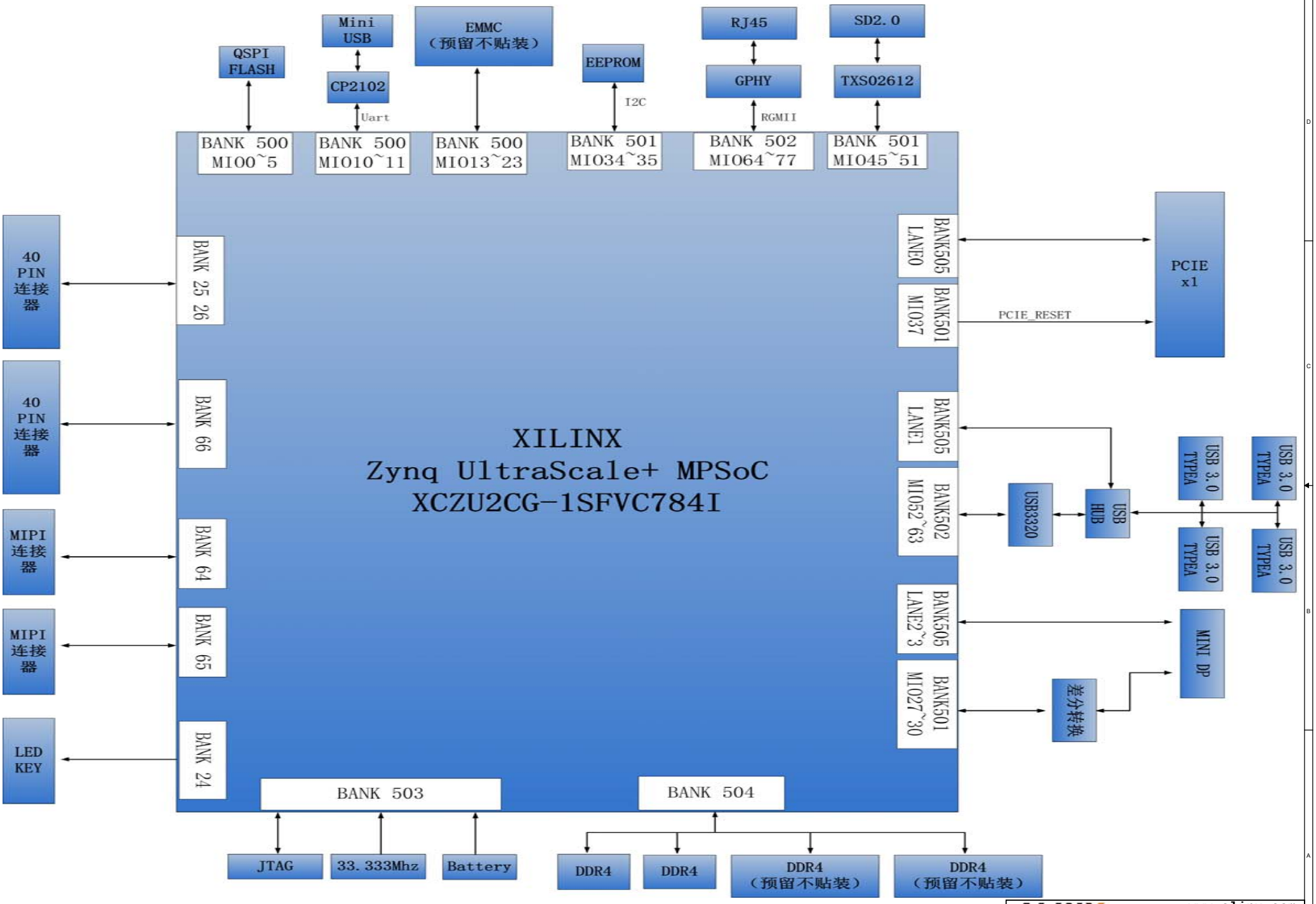

ALINX www.alinx.com

Title	PAGE01 Block diagram	
Size	Document Number: AXU2CG开发板 Schematics	Rev: 1.0
Date: Tuesday, November 03, 2020	Sheet 1 of 25	

ALINX Confidential

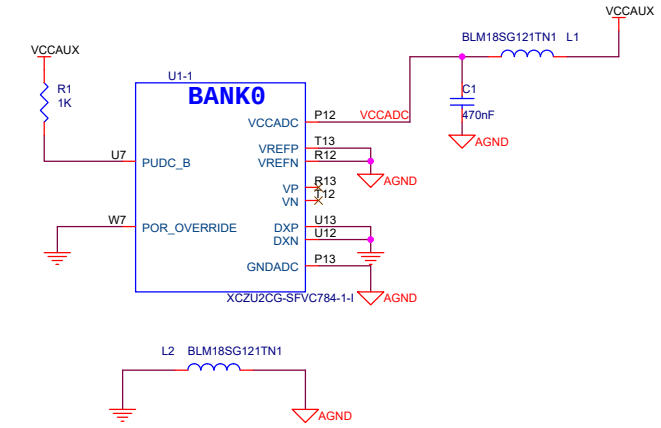

MODE[3:0]	BOOT MODE	Descritpion
0000	PS JTAG	PS JTAG Interface
0001	Quad_SPI(24b)	24-Bit addresssing(QSPI24)
0010	Quad_SPI(32b)	32-Bit addresssing(QSPI32)
0011	SD0(2.0)	SD2.0
0101	SD1(2.0)	SD2.0
0110	eMMC(1.8V)	eMMC version 4.5 at 1.8V
0111	USB0(2.0)	USB 2.0 only
1110	SD1 LS(3.0)	SD 3.0

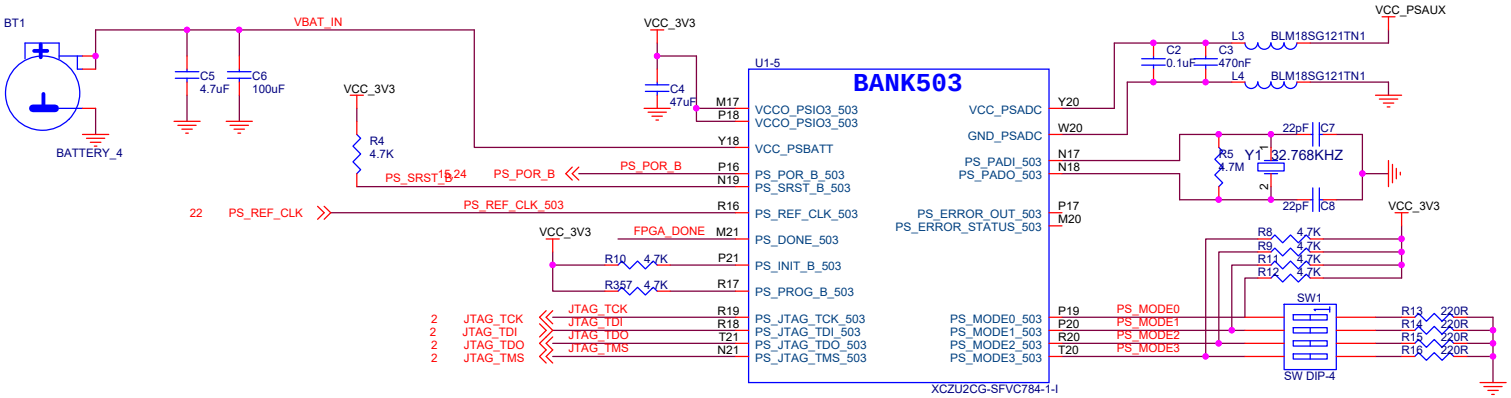

JTAG Connector

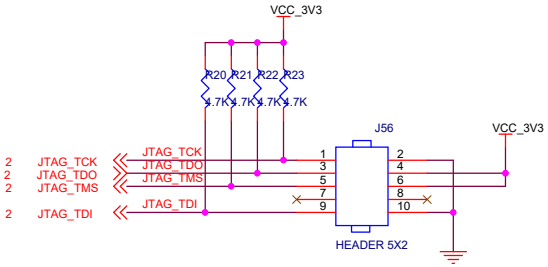

FPGA DONE LED

ALINX Confidential

ALINX www.alinx.com

Title: Page02 Z7 Bank0 & BANK503

Size | Document Number: AXU2CG开发板 Schematics | Rev: 1.0

Date: Friday, September 11, 2020 | Sheet 2 of 25

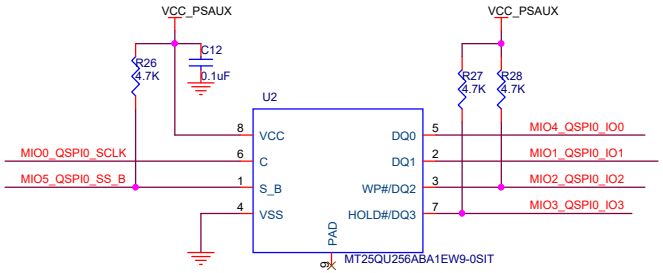

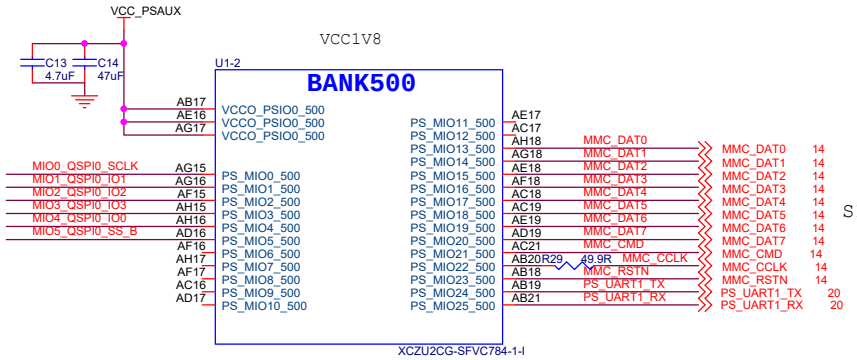

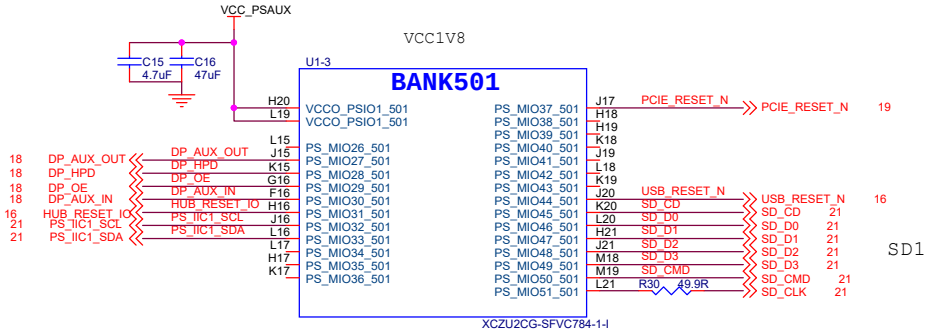

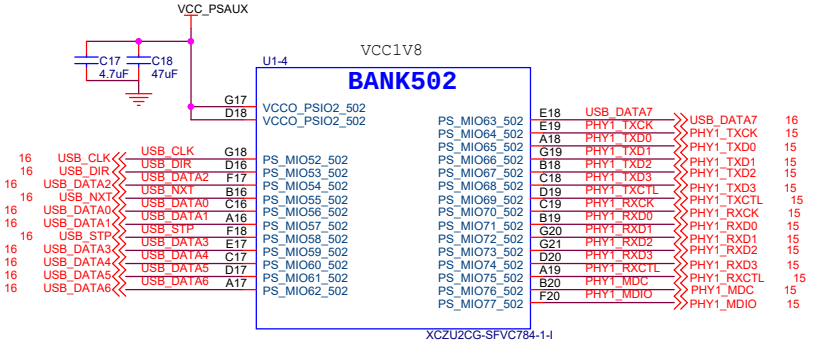

ALINX Confidential

ALINX www.alinx.com

Title	PAGE03 Z7 MIO-Config
Size	Document Number: AXU2CG开发板 Schematics
Rev	1.0
Date:	Friday, September 11, 2020
Sheet	3 of 25

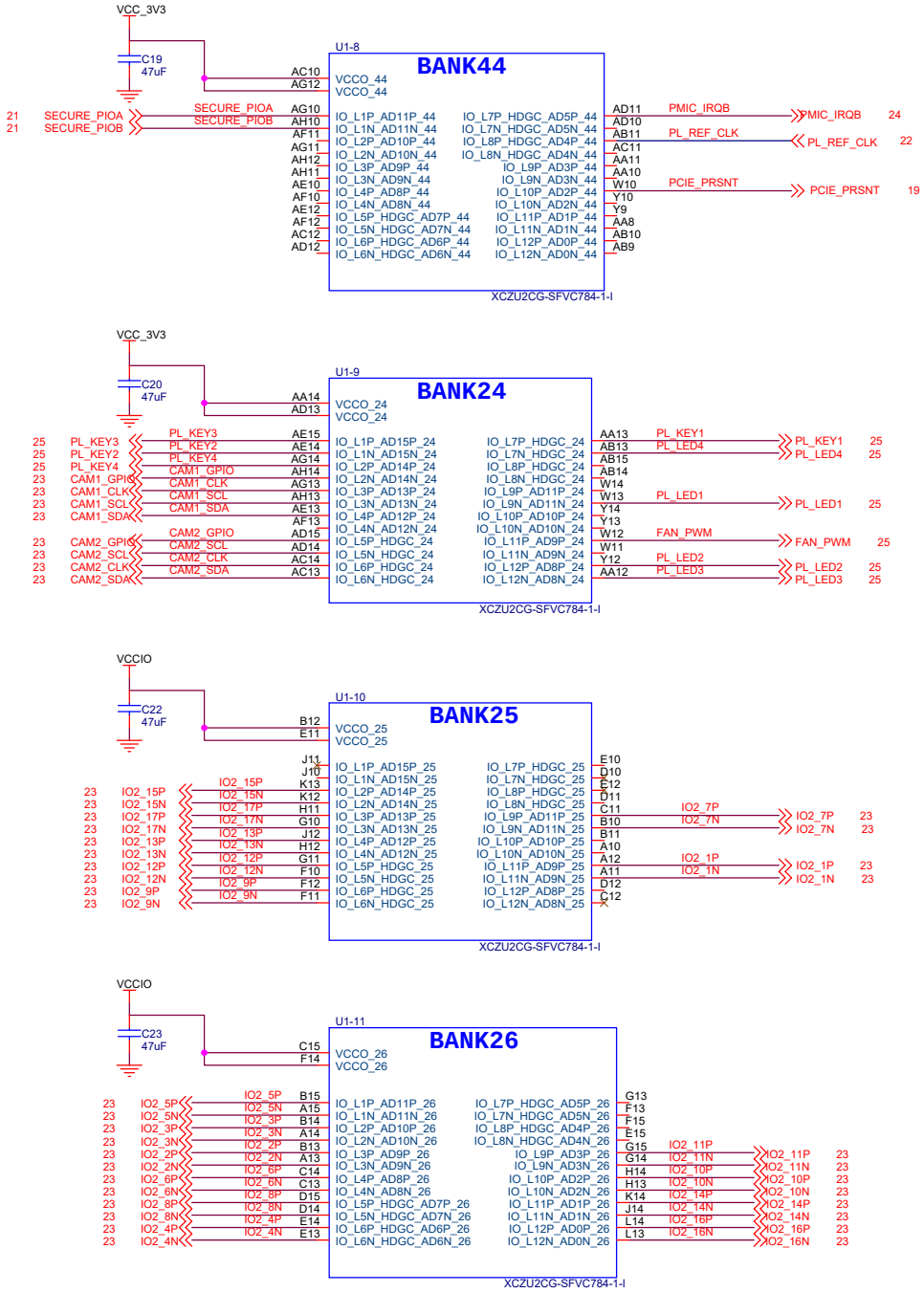

ALINX Confidential

www.alinx.com

Title: PAGE04 Z7 Bank44_24_25_26

Size: Document Number: AXU2CG开发板 Schematics — Rev: 1.0

Date: Wednesday, November 04, 2020 Sheet 4 of 25

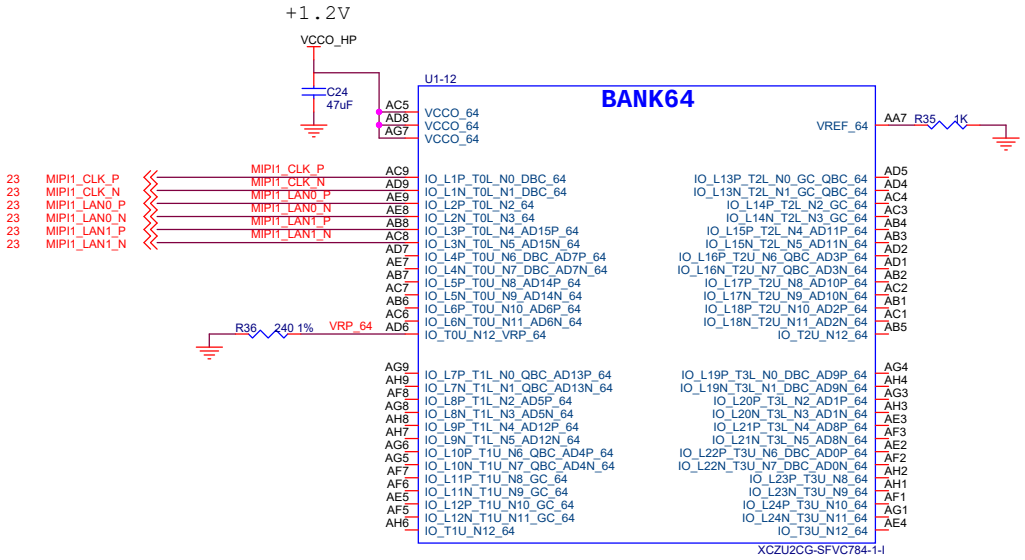

ALINX Confidential

ALINX www.alinx.com

Title: PAGE05 Z7 Bank64

Size | Document Number: AXU2CG开发板 Schematics | Rev: 1.0

Date: Friday, September 11, 2020 | Sheet 5 of 25

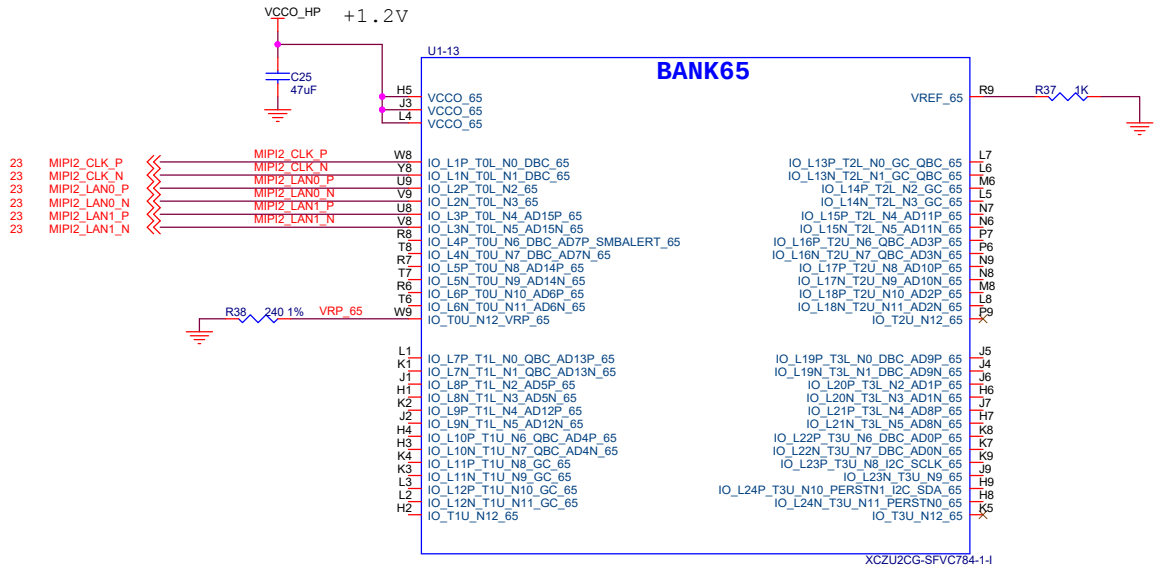

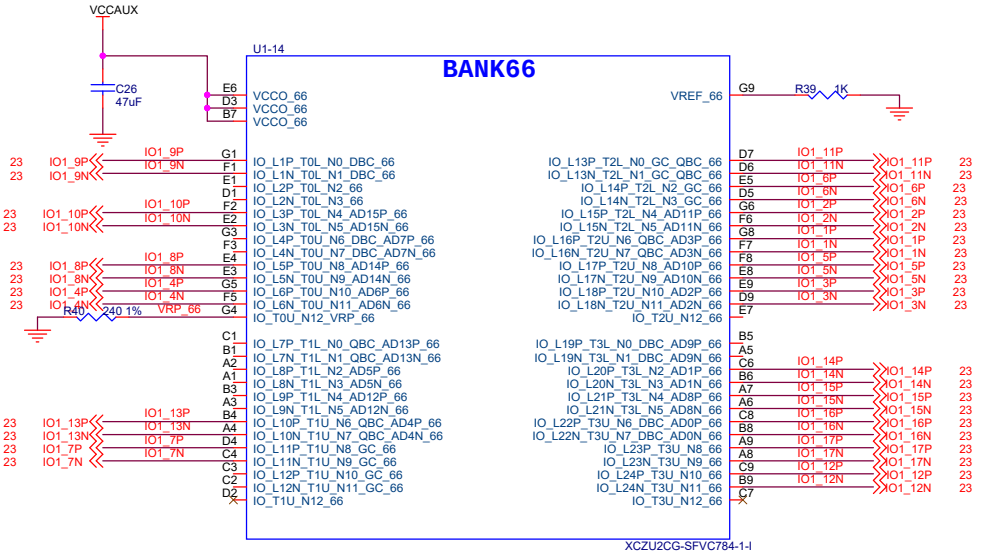

ALINX Confidential

www.alinx.com

Title	PAGE06 Z7 Bank65_66
Size	Document Number: AXU2CG开发板 Schematics
Rev	1.0
Date:	Friday, September 11, 2020
Sheet	6 of 25

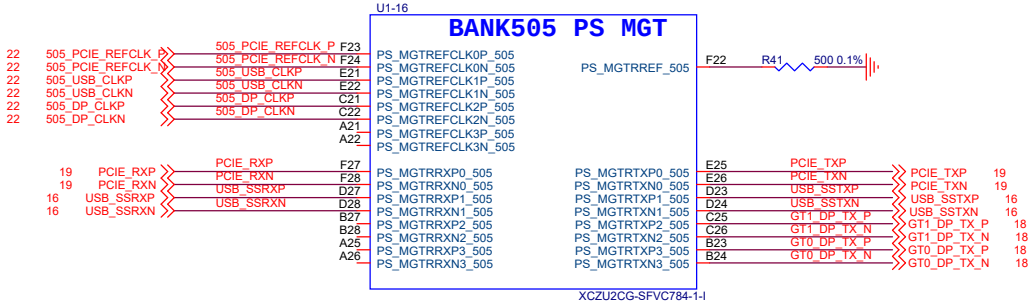

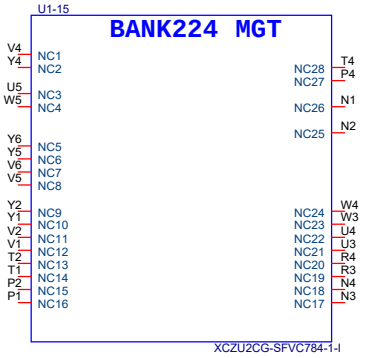

ALINX Confidential

ALINX www.alinx.com

Title: PAGE07 Z7 Bank505

Size | Document Number: AXU2CG开发板 Schematics | Rev: 1.0

Date: Friday, September 11, 2020 | Sheet 7 of 25

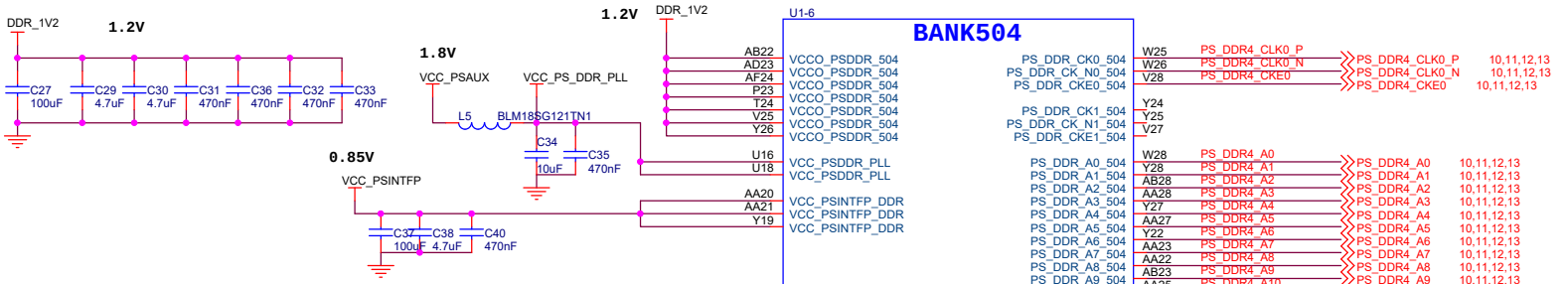

U1-6

BANK504

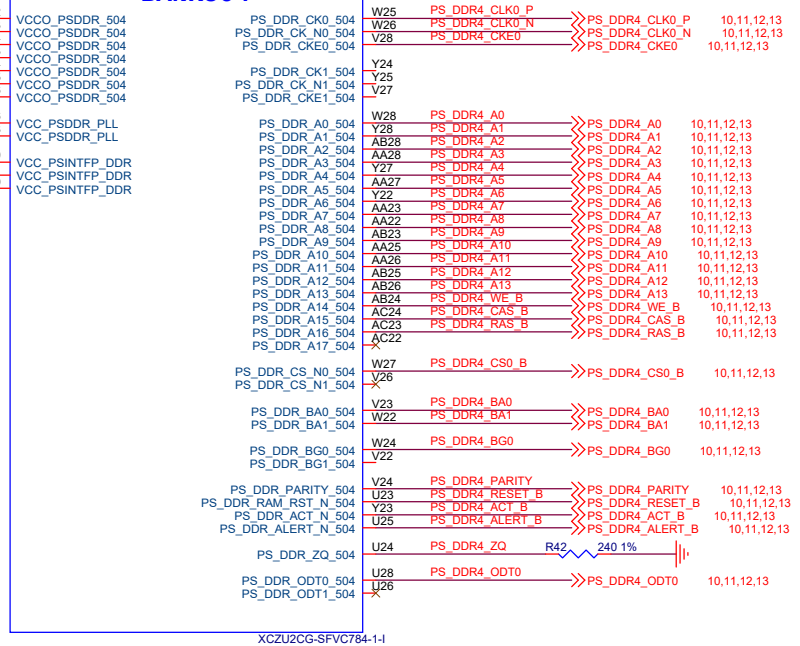

U1-7

BANK504

ALINX www.alinx.com

Title: PAGE08 Z7 Bank504

Size | Document Number: AXU2CG开发板 Schematics | Rev: 1.0

Date: Friday, September 11, 2020 | Sheet 8 of 25

ALINX Confidential

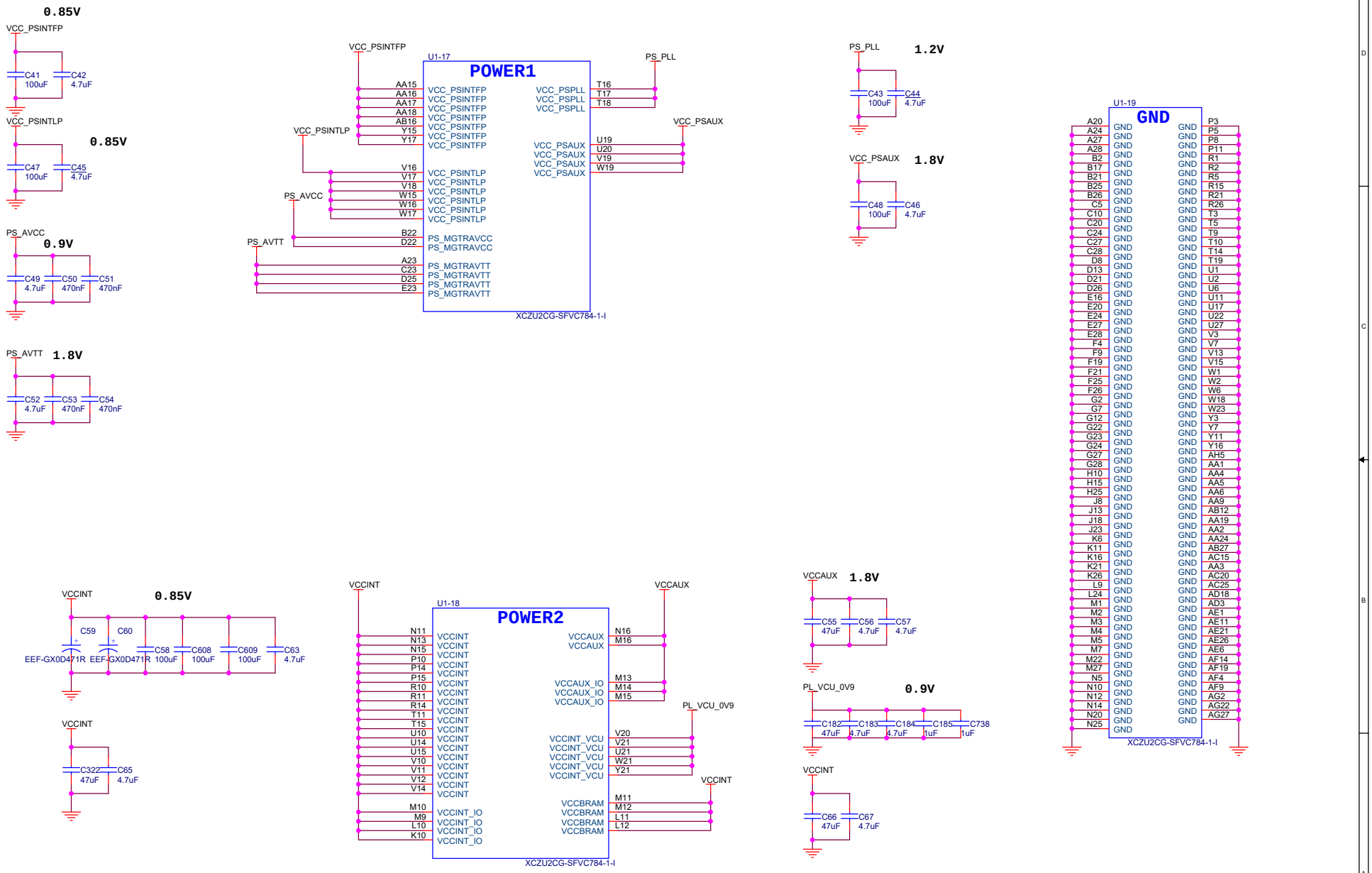

ALINX Confidential

ALINX www.alinx.com

Title	PAGE09 Z7 Power	
Size	Document Number: AXU2CG开发板 Schematics	Rev: 1.0
Date: Friday, September 11, 2020	Sheet 9 of 25	

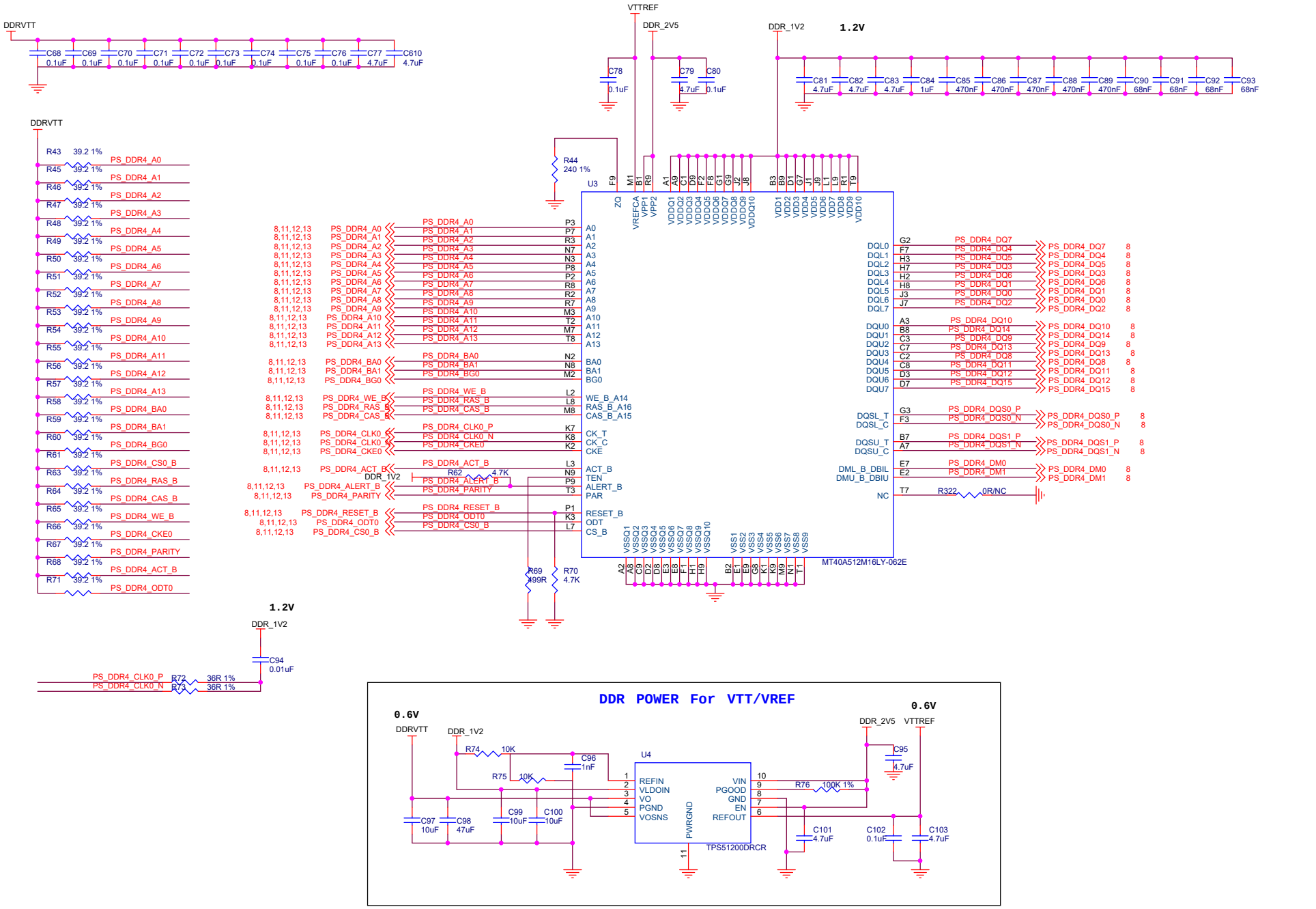

ALINX Confidential

www.alinx.com

Title	PAGE10 PS_DDR4_1
Size	Document Number: AXU2CG开发板 Schematics
Rev	1.0
Date:	Friday, September 11, 2020
Sheet	10 of 25

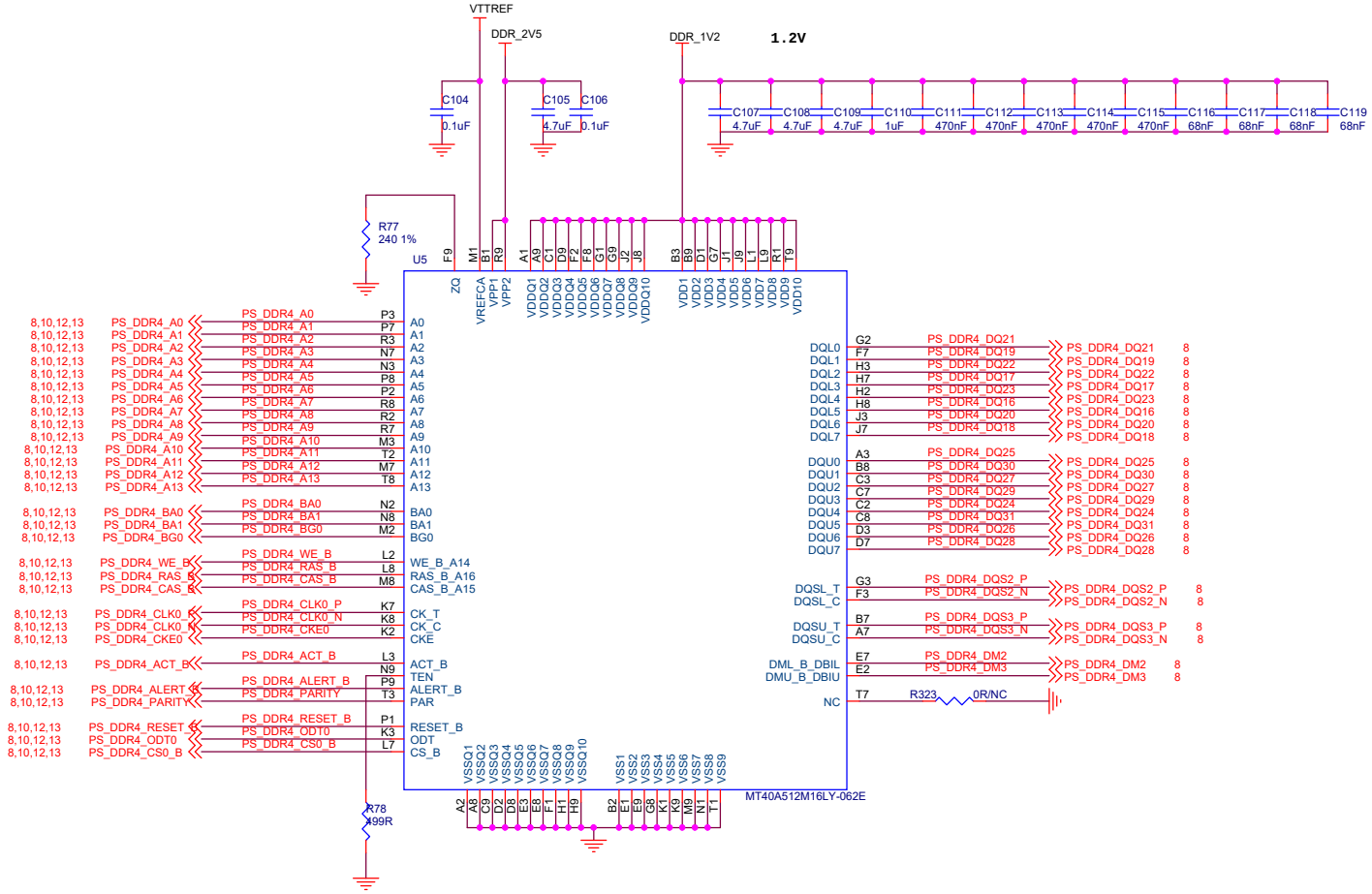

ALINX Confidential

www.alinx.com

Title	PAGE11 PS_DDR4_2
Size	Document Number: AXU2CG开发板 Schematics
Rev	1.0
Date:	Friday, September 11, 2020
Sheet	11 of 25

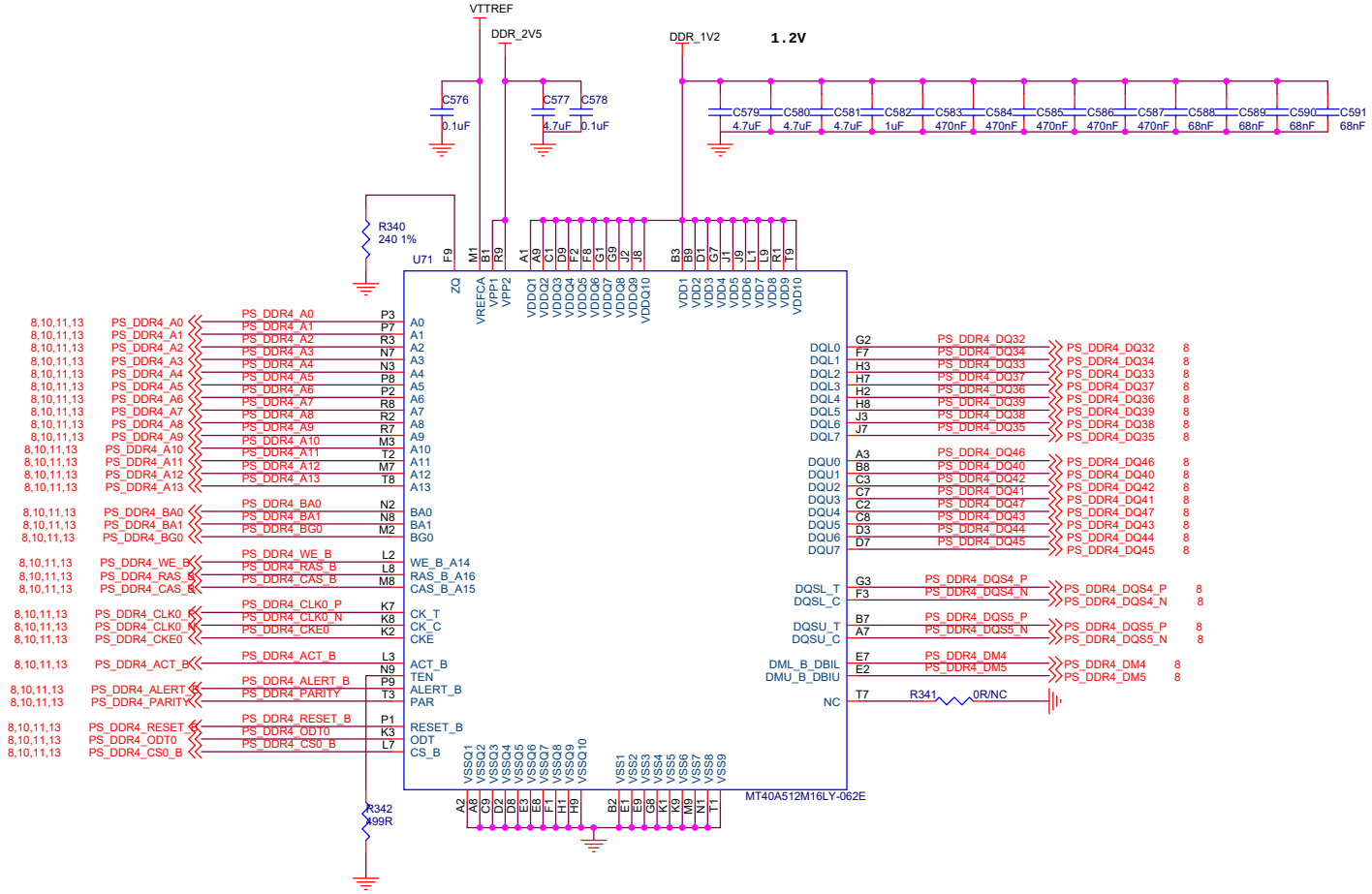

ALINX Confidential

ALINX www.alinx.com

Title: PAGE12 PS_DDR4_3

Size | Document Number: AXU2CG开发板 Schematics | Rev: 1.0

Date: Friday, September 11, 2020 | Sheet 12 of 25

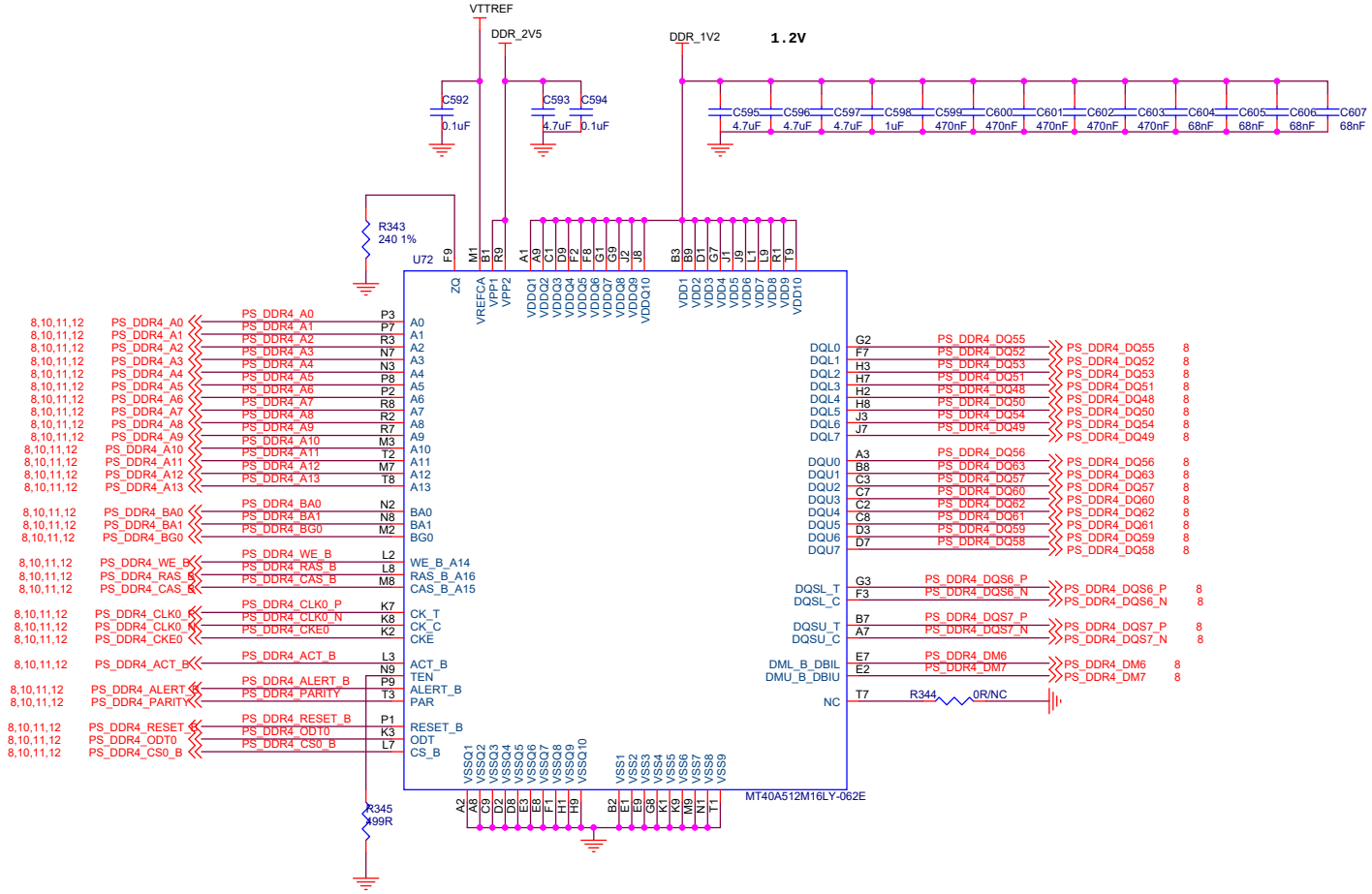

ALINX Confidential

www.alinx.com

Title	PAGE13 PS_DDR4_4
Size	Document Number: AXU2CG开发板 Schematics
Rev	1.0
Date:	Friday, September 11, 2020
Sheet	13 of 25

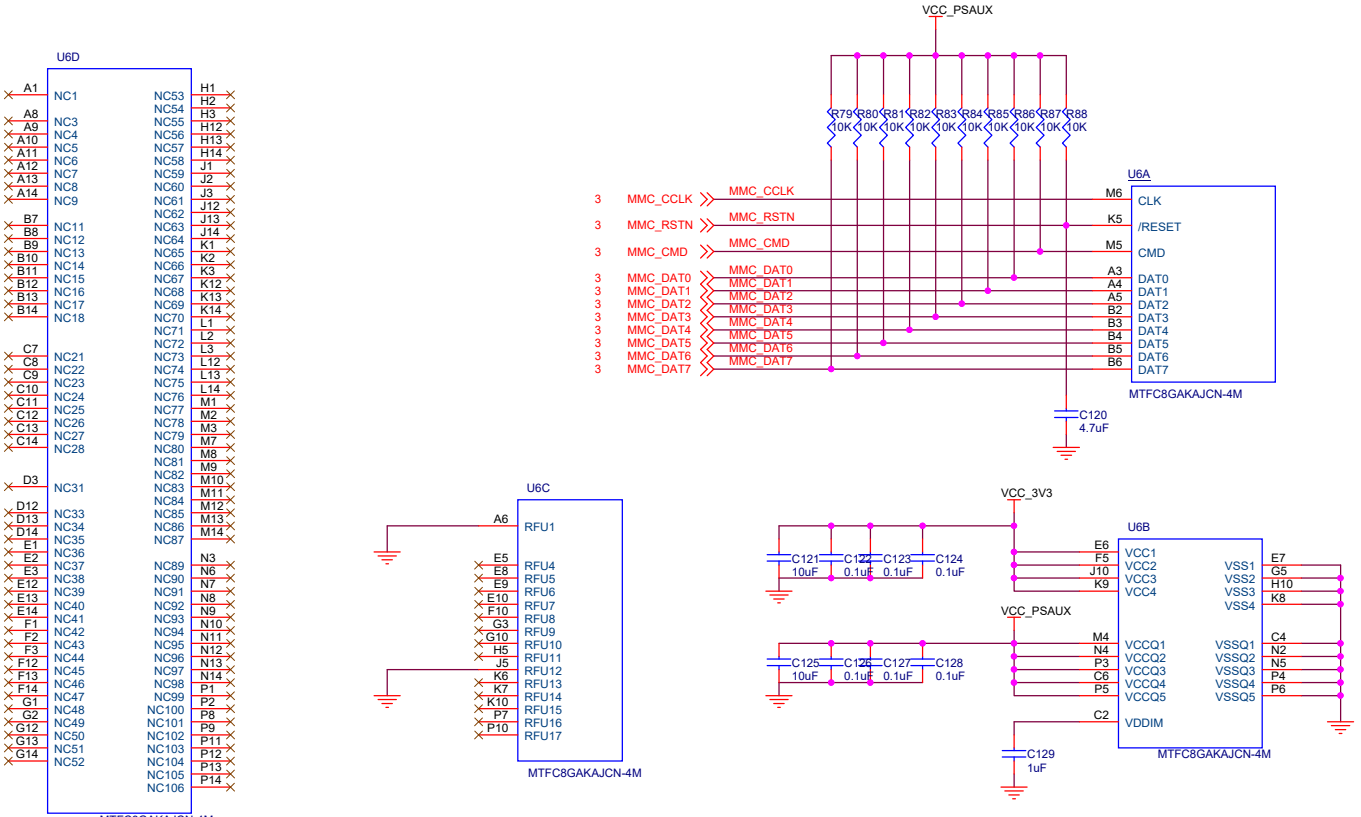

ALINX Confidential

ALINX www.alinx.com

Title	PAGE14 eMMC	
Size	Document Number: AXU2CG开发板 Schematics	Rev: 1.0
Date: Friday, September 11, 2020	Sheet 14 of 25	

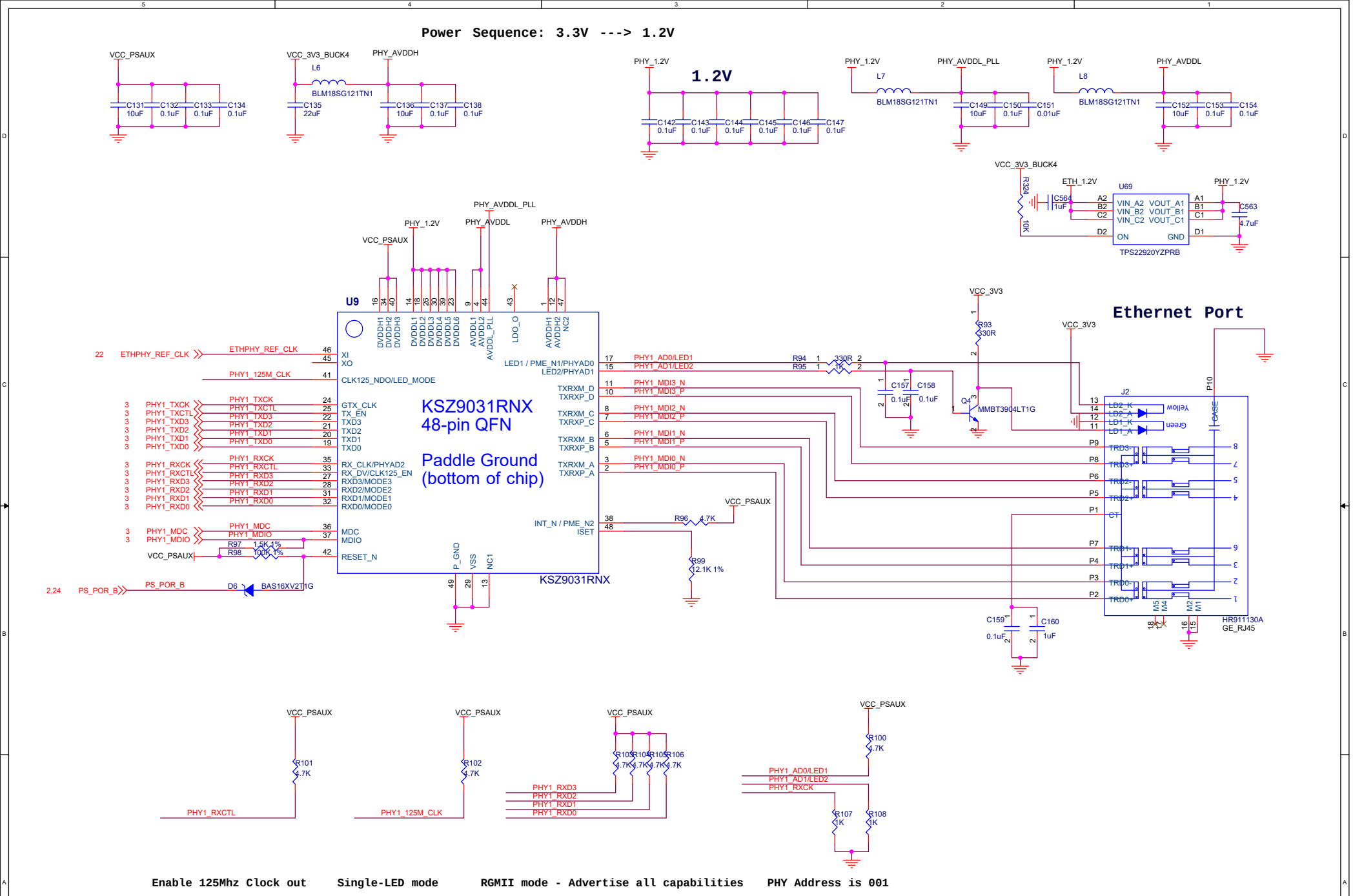

ALINX Confidential

ALINX www.alinx.com

Title	PAGE15 PS Ethernet	
Size	Document Number: AXU2CG开发板 Schematics	Rev 1.0
Date: Friday, September 11, 2020	Sheet 15 of 25	

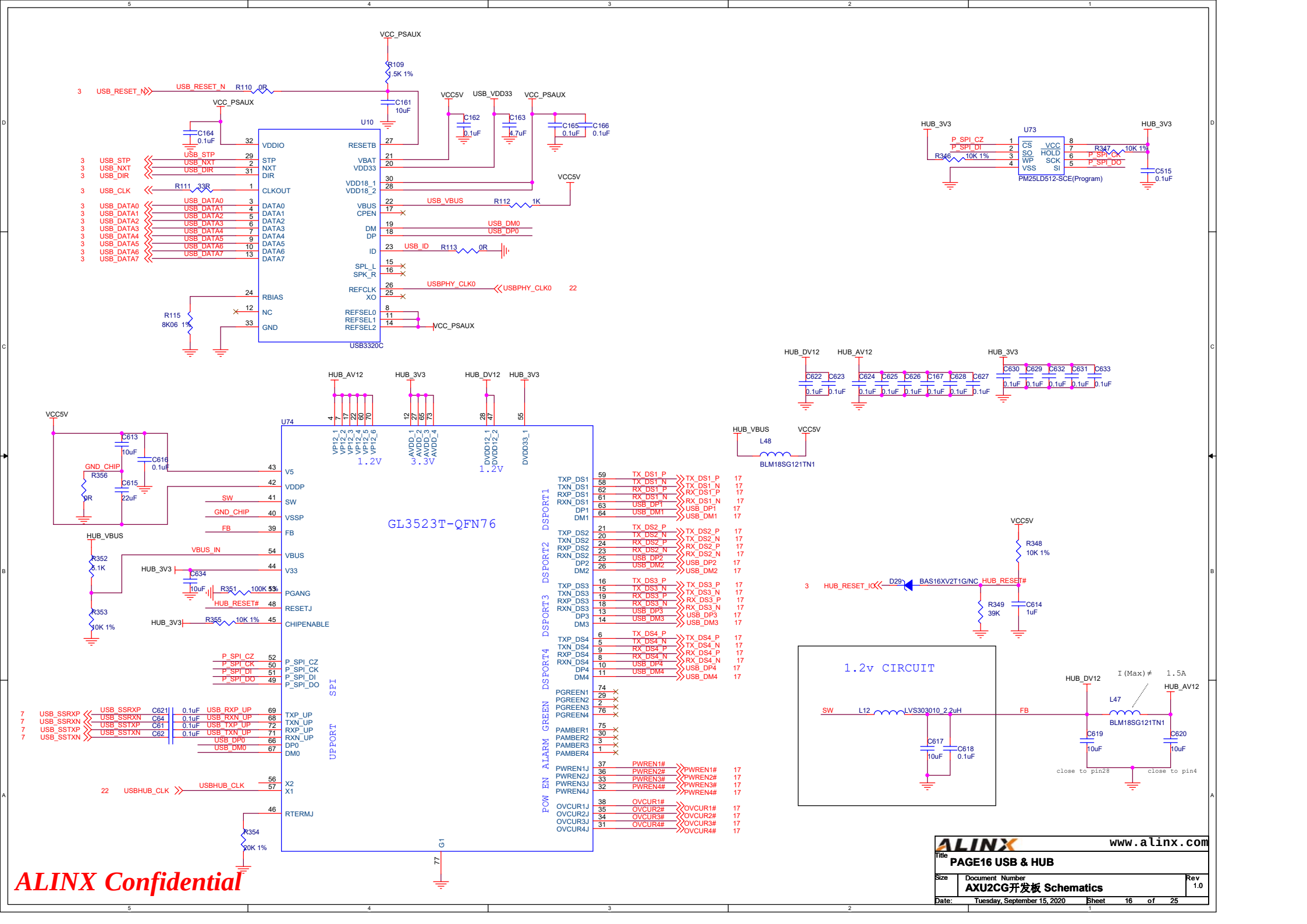
VCC_PSAUX
R109 1.5K 1%
USB_RESET_N
R110 0R
C161 10uF
U10
C164 0.1uF
C162 0.1uF
C163 4.7uF
C165 0.1uF
C166 0.1uF
VCC5V
USB_VDD33
USB_STP
USB_NXT
USB_DIR
USB_CLK
R111 33R
USB_DATA0
USB_DATA1
USB_DATA2
USB_DATA3
USB_DATA4
USB_DATA5
USB_DATA6
USB_DATA7
VDDIO
STP
NXT
DIR
CLKOUT
DATA0
DATA1
DATA2
DATA3
DATA4
DATA5
DATA6
DATA7
RESETB
VBAT
VDD33
VDD18_1
VDD18_2
VBUS
CPEN
USB_VBUS
R112 1K
DM
DP
USB_DM0
USB_DP0
ID
USB_ID
R113 0R
SPL_L
SPK_R
REFCLK
XO
USBPHY_CLK0
REFSEL0
REFSEL1
REFSEL2
RBIAS
NC
GND
R115 8K06 1%
USB3320C
HUB_3V3
U73
P_SPI_CZ
P_SPI_DI
P_SPI_CK
P_SPI_DO
R346 10K 1%
R347 10K 1%
CS
SO
WP
VSS
VCC
HOLD
SCK
SI
PM25LD512-SCE(Program)
C515 0.1uF
HUB_DV12
HUB_AV12
C622 C623
C624 C625 C626 C167 C628 C627
C630 C629 C632 C631 C633
0.1uF
U74
VP12_1 VP12_2 VP12_3 VP12_4 VP12_5 VP12_6
1.2V
AVDD_1 AVDD_2 AVDD_3 AVDD_4
3.3V
DVDD12_1 DVDD12_2
DVDD33_1
GL3523T-QFN76
HUB_VBUS
L48
BLM18SG121TN1
C613 10uF
C616 0.1uF
GND_CHIP
R356 0R
C615 22uF
V5
VDDP
SW
VSSP
FB
VBUS
V33
PGANG
RESETJ
CHIPENABLE
VBUS_IN
R352 5.1K
R353 10K 1%
C634 10uF
R351 100K 1%
R355 10K 1%
HUB_RESET#
R348 10K 1%
D29 BAS16XV2T1G/NC
R349 39K
C614 1uF
HUB_RESET_IO
P_SPI_CZ
P_SPI_CK
P_SPI_DI
P_SPI_DO
SPI
USB_SSRXP
USB_SSRXN
USB_SSTXP
USB_SSTXN
C621 C64 C61 C62
0.1uF
USB_RXP_UP
USB_RXN_UP
USB_TXP_UP
USB_TXN_UP
TXP_UP
TXN_UP
RXP_UP
RXN_UP
DP0
DM0
UPPORT
USBHUB_CLK
X2
X1
RTERMJ
R354 20K 1%
G1
DSPORT1
DSPORT2
DSPORT3
DSPORT4
TXP_DS1
TXN_DS1
RXP_DS1
RXN_DS1
DP1
DM1
TX_DS1_P
TX_DS1_N
RX_DS1_P
RX_DS1_N
USB_DP1
USB_DM1
TXP_DS2
TXN_DS2
RXP_DS2
RXN_DS2
DP2
DM2
TX_DS2_P
TX_DS2_N
RX_DS2_P
RX_DS2_N
USB_DP2
USB_DM2
TXP_DS3
TXN_DS3
RXP_DS3
RXN_DS3
DP3
DM3
TX_DS3_P
TX_DS3_N
RX_DS3_P
RX_DS3_N
USB_DP3
USB_DM3
TXP_DS4
TXN_DS4
RXP_DS4
RXN_DS4
DP4
DM4
TX_DS4_P
TX_DS4_N
RX_DS4_P
RX_DS4_N
USB_DP4
USB_DM4
POW EN ALARM GREEN
PGREEN1
PGREEN2
PGREEN3
PGREEN4
PAMBER1
PAMBER2
PAMBER3
PAMBER4
PWREN1J
PWREN2J
PWREN3J
PWREN4J
PWREN1#
PWREN2#
PWREN3#
PWREN4#
OVCUR1J
OVCUR2J
OVCUR3J
OVCUR4J
OVCUR1#
OVCUR2#
OVCUR3#
OVCUR4#
1.2v CIRCUIT
SW
L12 LVS303010_2.2uH
FB
C617 10uF
C618 0.1uF
I(Max)≠ 1.5A
L47
BLM18SG121TN1
C619 10uF
C620 10uF
close to pin28
close to pin4
ALINX Confidential
www.alinx.com
Title
PAGE16 USB & HUB
Size
Document Number
AXU2CG开发板 Schematics
Rev 1.0
Date: Tuesday, September 15, 2020
Sheet 16 of 25

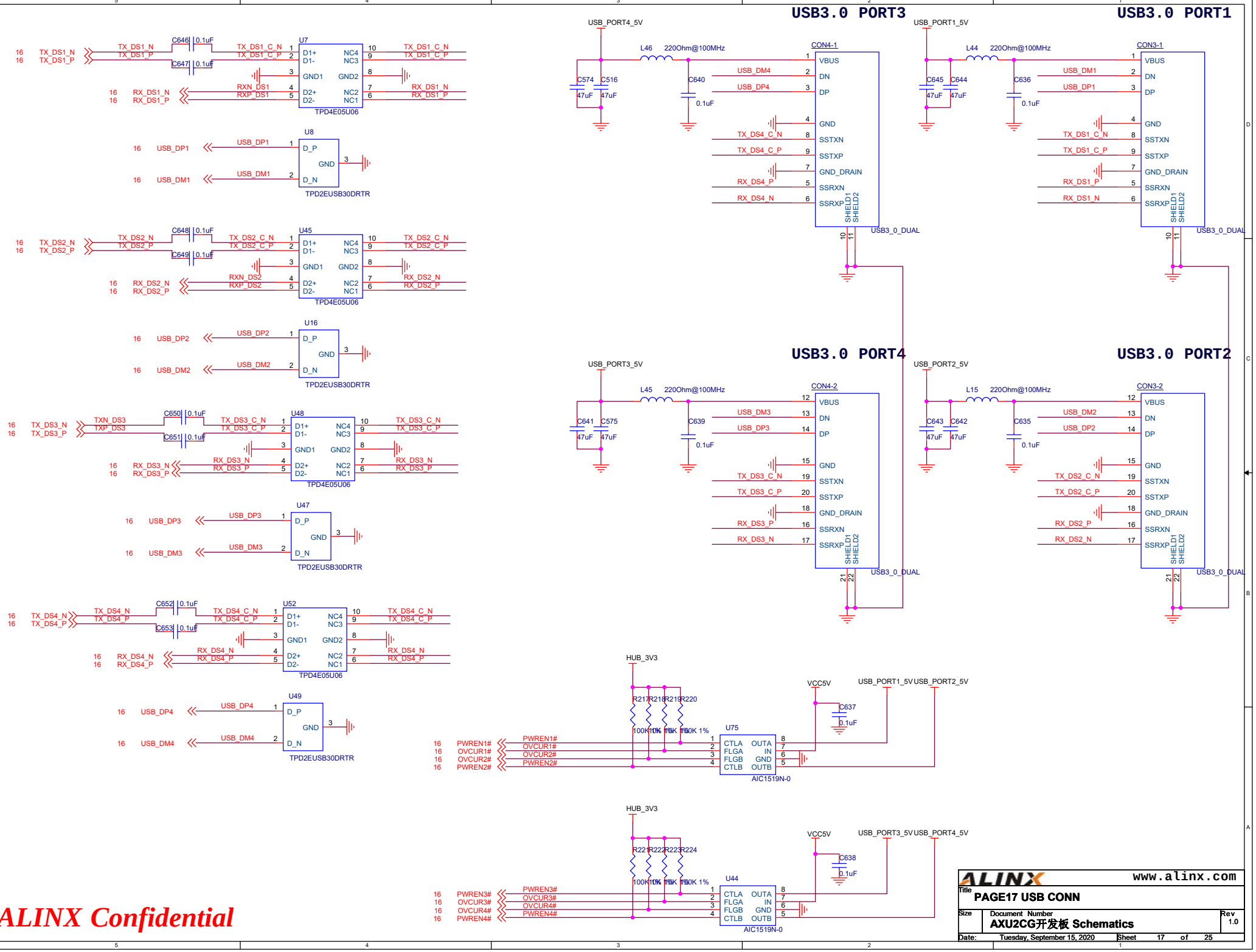
USB3.0 PORT3
USB3.0 PORT1
USB3.0 PORT4
USB3.0 PORT2
TPD4E05U06
TPD2EUSB30DRTR
CON4-1
CON3-1
CON4-2
CON3-2
USB3_0_DUAL
HUB_3V3
AIC1519N-0
U75
U44
ALINX Confidential
www.alinx.com
PAGE17 USB CONN
AXU2CG开发板 Schematics
Rev 1.0
Tuesday, September 15, 2020
Sheet 17 of 25

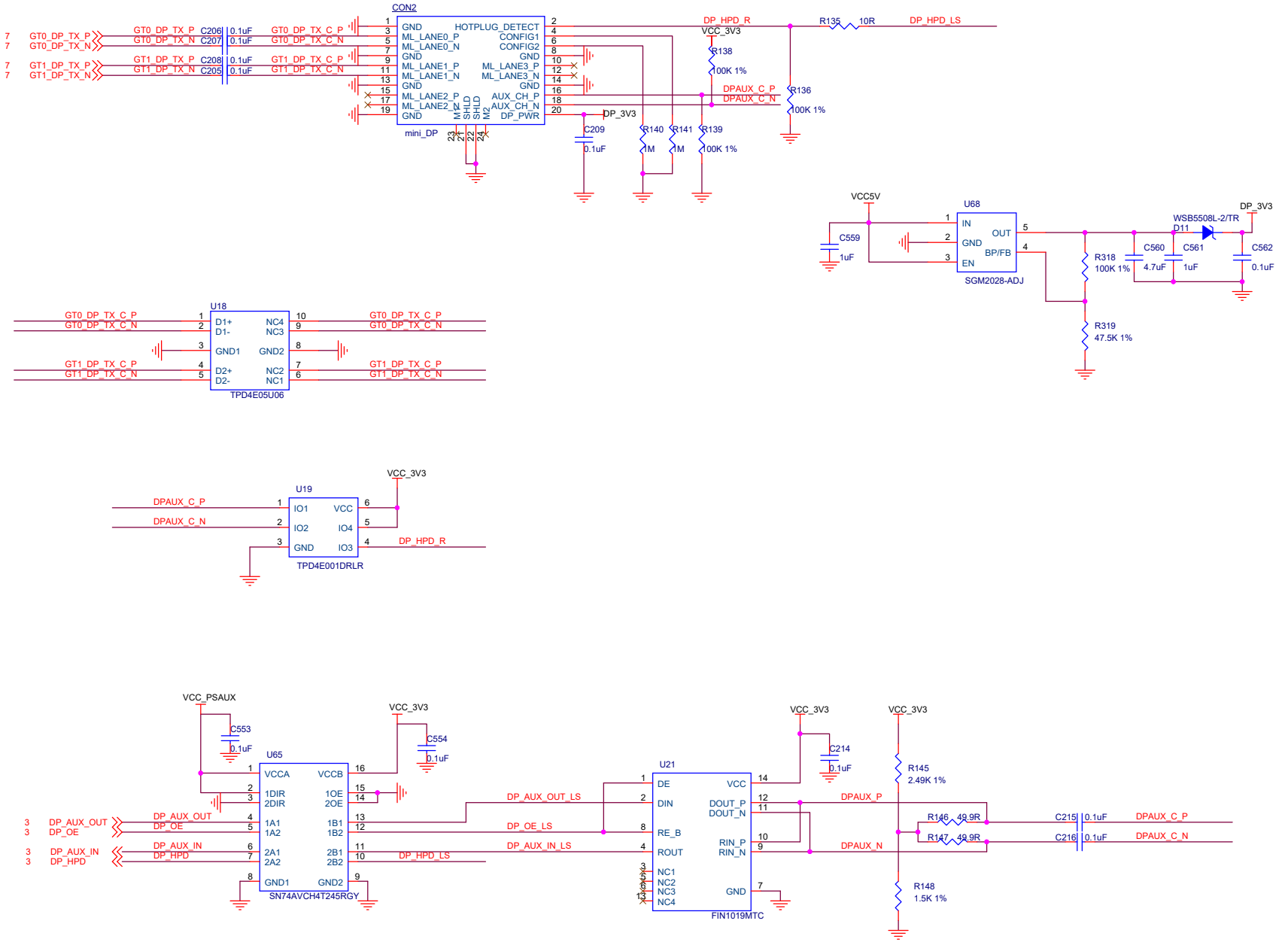

ALINX Confidential

ALINX www.alinx.com

Title	PAGE18 Display Port
Size	Document Number: AXU2CG开发板 Schematics
Rev	1.0
Date:	Friday, September 11, 2020
Sheet	18 of 25

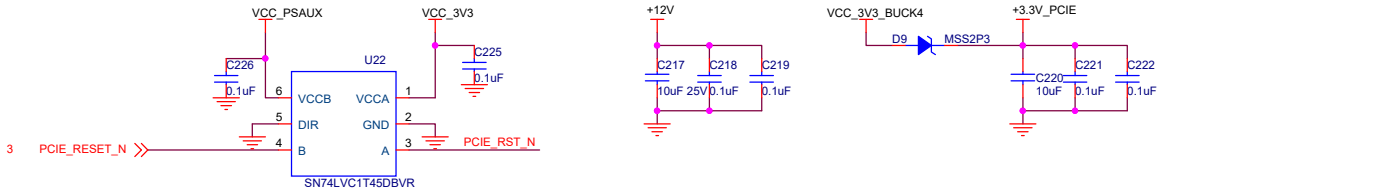

PCIE X1 Socket

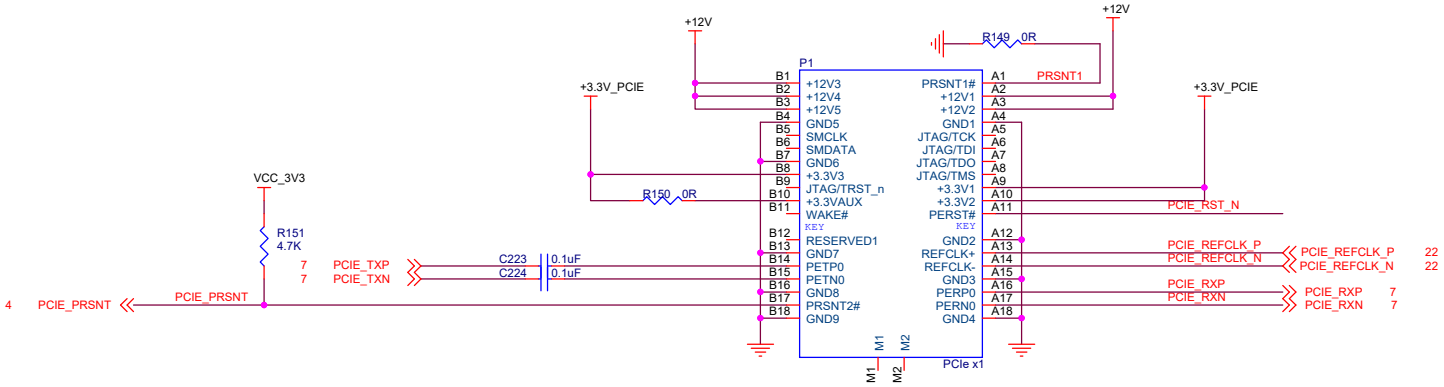

ALINX Confidential

ALINX www.alinx.com

Title	PAGE19 PCIE
Size	Document Number: AXU2CG开发板 Schematics
Rev	1.0
Date:	Friday, September 11, 2020
Sheet	19 of 25

PS UART PORT

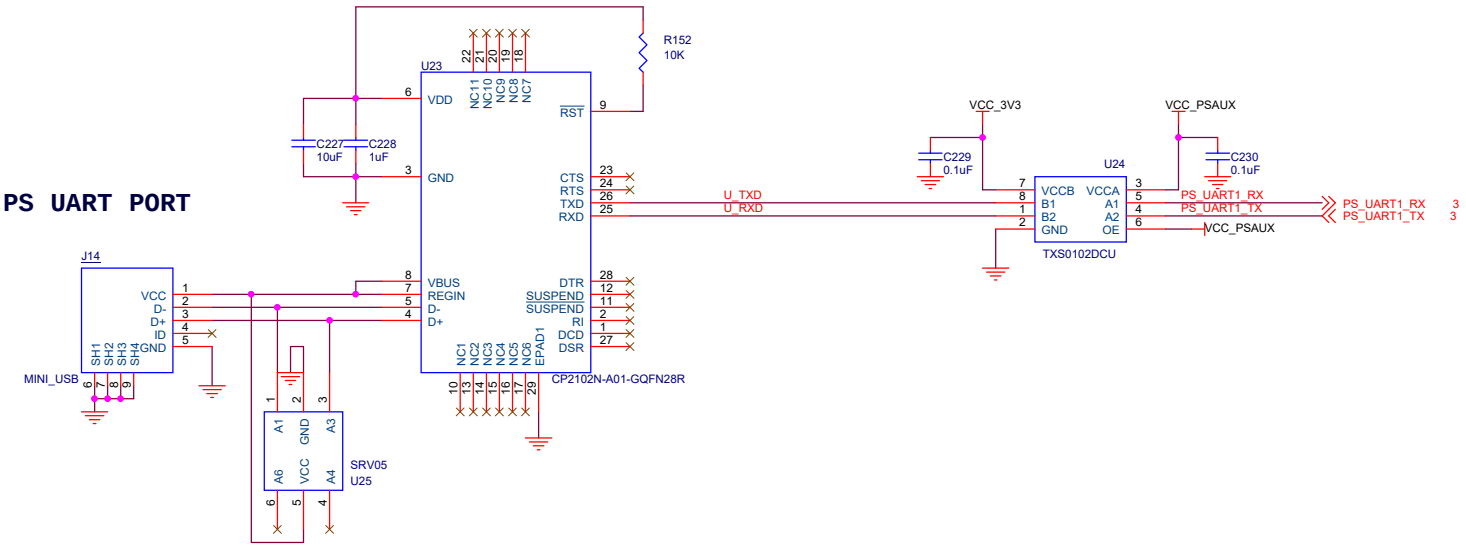

ALINX Confidential

ALINX	www.alinx.com	
Title: PAGE20 PS UART		
Size	Document Number: AXU2CG开发板 Schematics	Rev: 1.0
Date: Friday, September 11, 2020	Sheet 20 of 25	

SD Card Connector

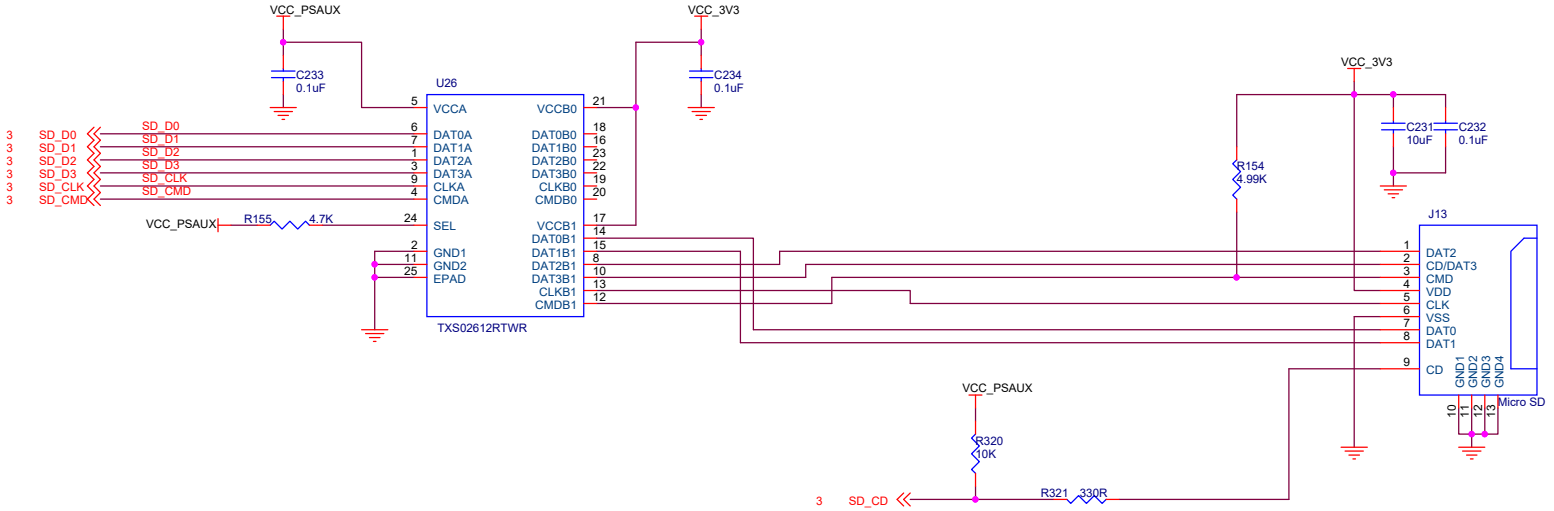

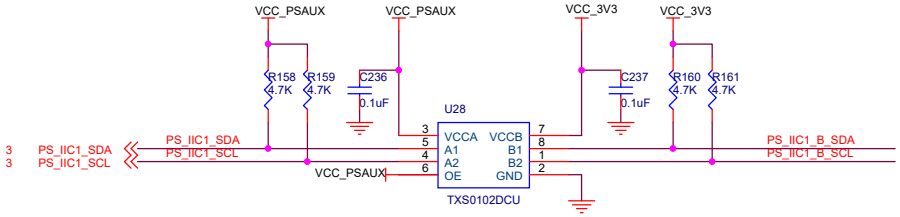

PS_IIC1: IIC ADDRESS IS 0x50

EEPROM

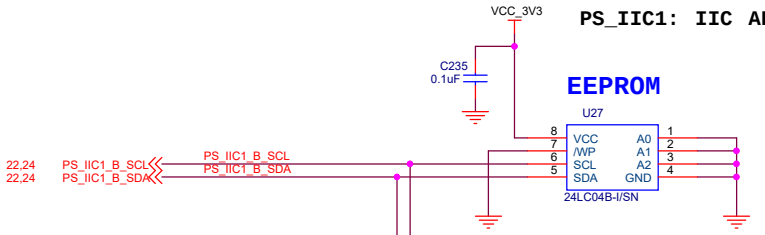

Security IC

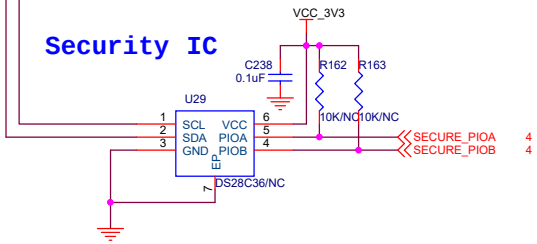

PS_IIC1: IIC ADDRESS IS 0x1B

ALINX Confidential

ALINX		www.alinx.com
Title	PAGE21 SD & EEPROM	
Size	Document Number: AXU2CG开发板 Schematics	Rev: 1.0
Date: Tuesday, November 03, 2020	Sheet 21 of 25	

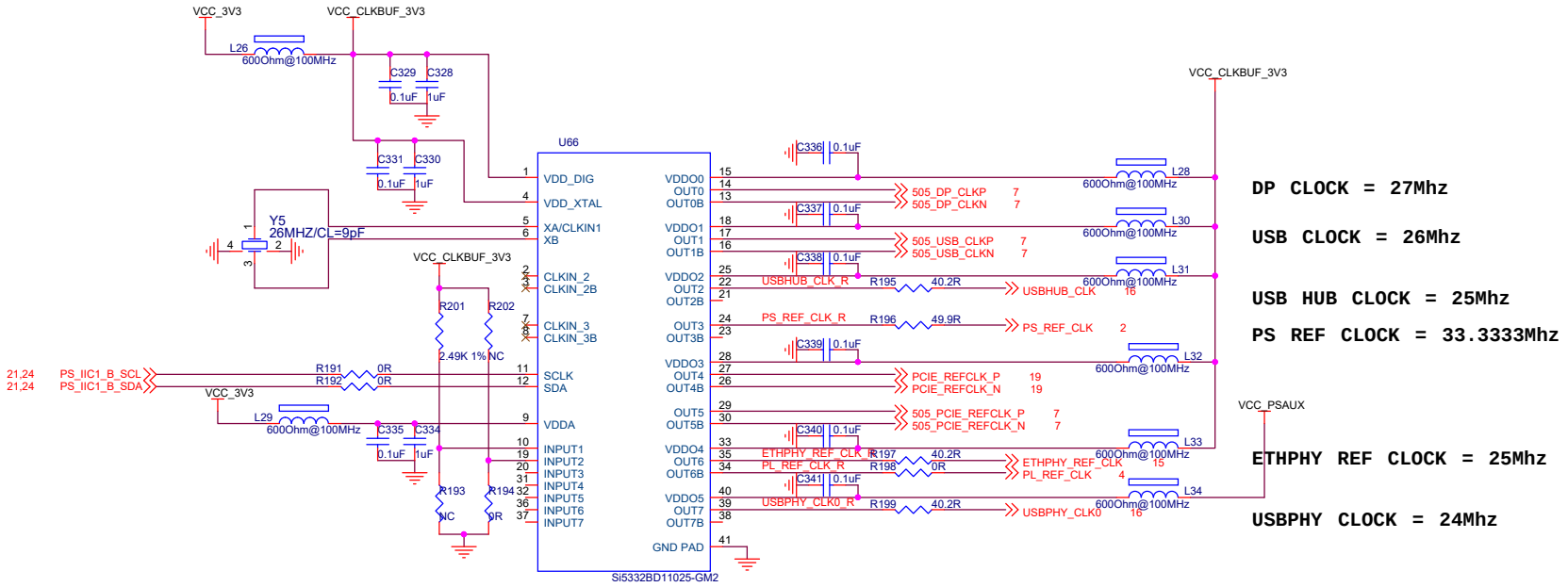

DP CLOCK = 27Mhz

USB CLOCK = 26Mhz

USB HUB CLOCK = 25Mhz

PS REF CLOCK = 33.3333Mhz

ETHPHY REF CLOCK = 25Mhz

USBPHY CLOCK = 24Mhz

PS_IIC1: IIC ADDRESS IS 0x76

ALINX Confidential

ALINX	www.alinx.com
Title	PAGE22 CLOCK
Size	Document Number: AXU2CG开发板 Schematics — Rev: 1.0
Date:	Wednesday, September 16, 2020 — Sheet 22 of 25

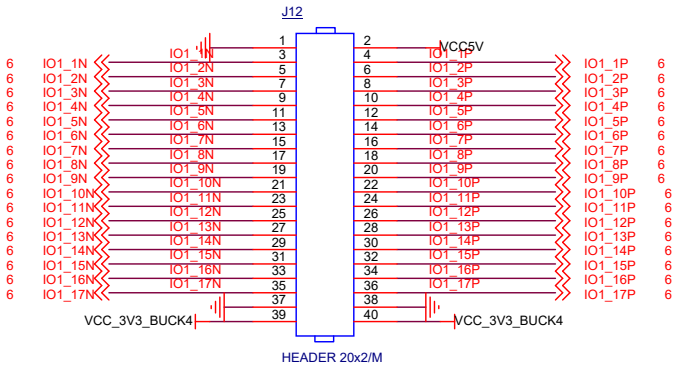

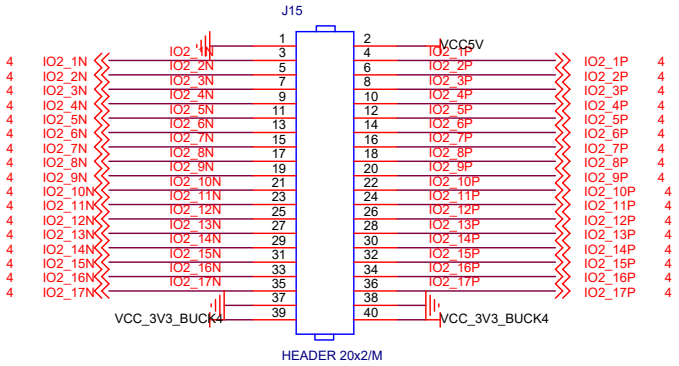

MIPI1 Interface

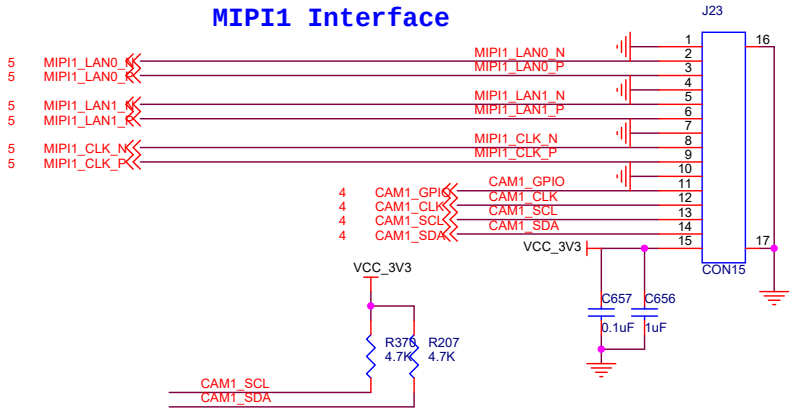

MIPI2 Interface

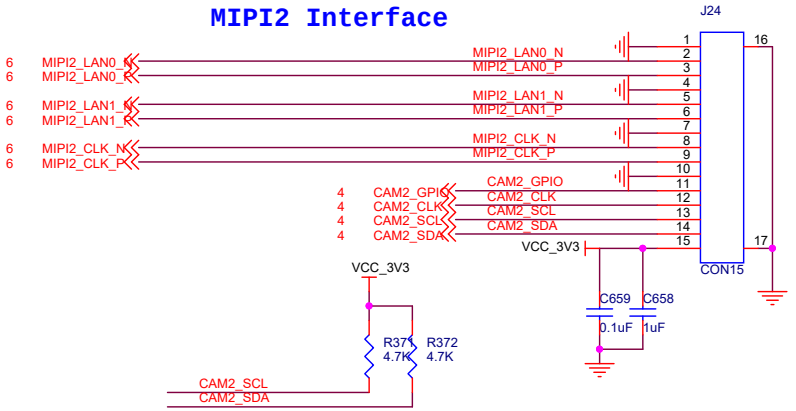

ALINX Confidential

ALINX www.alinx.com

Title: PAGE23 Connector

Size | Document Number: AXU2CG开发板 Schematics | Rev: 1.0

Date: Wednesday, November 04, 2020 Sheet 23 of 25

CTL4=1 → VCC5V (BUCK1:+5V)

CTL3=1 → VCC_PSINTLP (BUCK2:0.85V) → GPO1 (PSINTFP_EN)

→ ETH_1.2V (BUCK5:1.2V) → VCC_PSAUX (BUCK6:1.8V) → PS_PLL (LDOA2:1.2V) → PS_AVCC (VTTLDO:0.9V) → PS_AVTT (LDOA1:1.8V)

CTL5=1 → VCC_3V3_BUCK4 DDR_1V2 (BUCK4:3.3V) (BUCK3:1.2V) → GPO4 (VCCINT_EN)

→ VCCAUX (SWB1_2:1.8V) → Power GOOD (GPO3)

GPO1-----BUCK1_2_PG
GPO4-----BUCK4_PG

CTL2-------enable and disable SWA1
CTL3-------PS_FP_PWR_EN_LS
CTL4-------enable BUCK1
CTL5-------PL_PWR_EN

500mA

U34 SPX3819M5-2-5 (VCC5V → DDR_2V5)

U77 SPX3819M5-3-3 (VCC_3V3, VCC5V → VCCIO)

U36 TPS6508641RSKR

0.2A 1V8

0V9

0.6A 1V2

0.6A 1V2

1.8V

U35 CSD87381P → L21 CMLE051E-2R2MS → VCC5V

U37 CSD87381P → L22 CMLE051E-R22MS → VCC_PSINTLP 0.85V

U38 CSD87381P → L25 CMLE051E-1R0MS → VCC_PSAUX 1.8V

L23 CMLE051E-R47MS → DDR_1V2 3A

L24 CMLB041B-1R0MS → VCC_3V3_BUCK4 3A

L27 CMLB041B-1R0MS → ETH_1.2V 3A

Place near U38

PS_IIC0: IIC ADDRESS IS 0x5E

VCC_PSINTLP — VCC_PSINTFP

VCC_PSINTLP — VCCINT

ALINX www.alinx.com

Title	PAGE24 PMIC	
Size	Document Number: AXU2CG开发板 Schematics	Rev: 1.0
Date: Tuesday, November 03, 2020	Sheet 24 of 25	

12V/2A AC Adapter

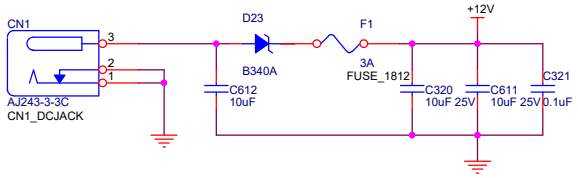

POWER LED

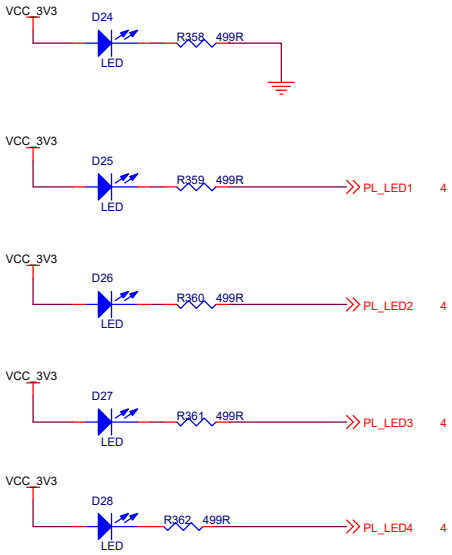

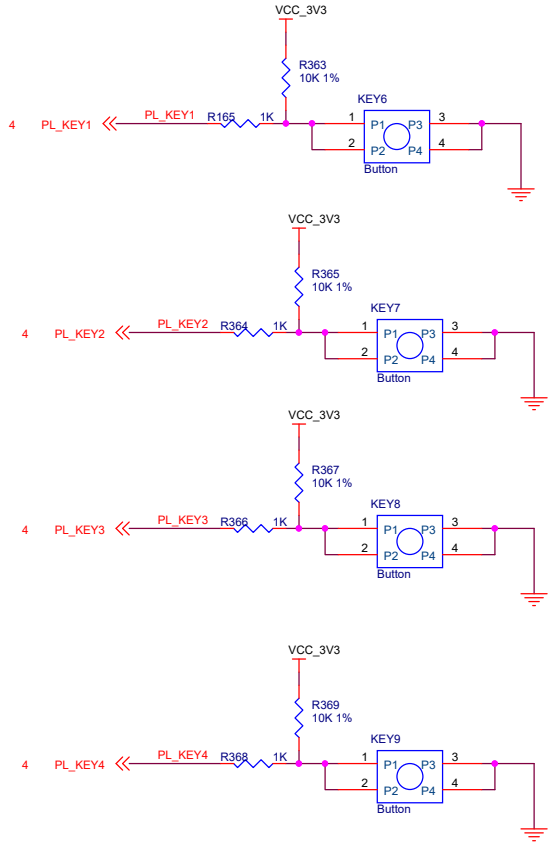

FAN

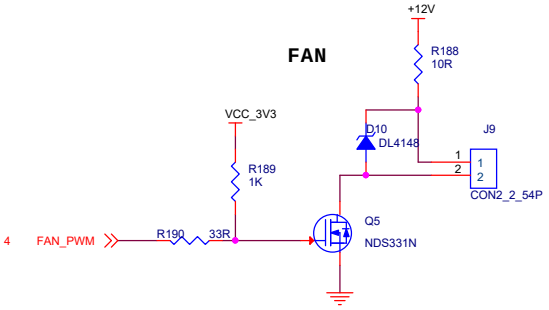

0.9V POWER

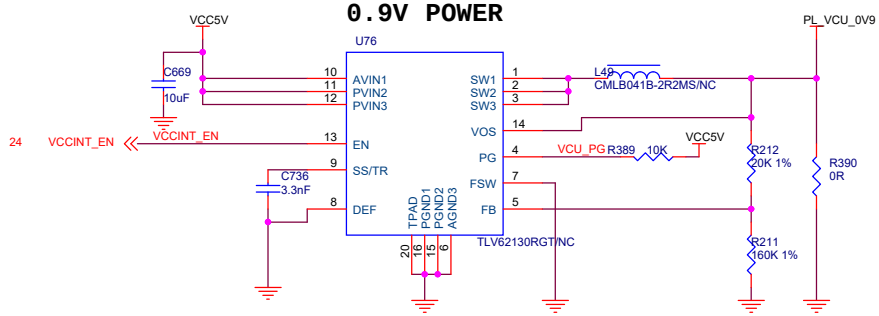

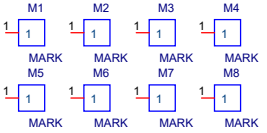

ALINX www.alinx.com

Title: PAGE25 POWER

Size | Document Number: AXU2CG开发板 Schematics | Rev: 1.0

Date: Thursday, November 05, 2020 | Sheet 25 of 25