Reuse

Guess

Choose

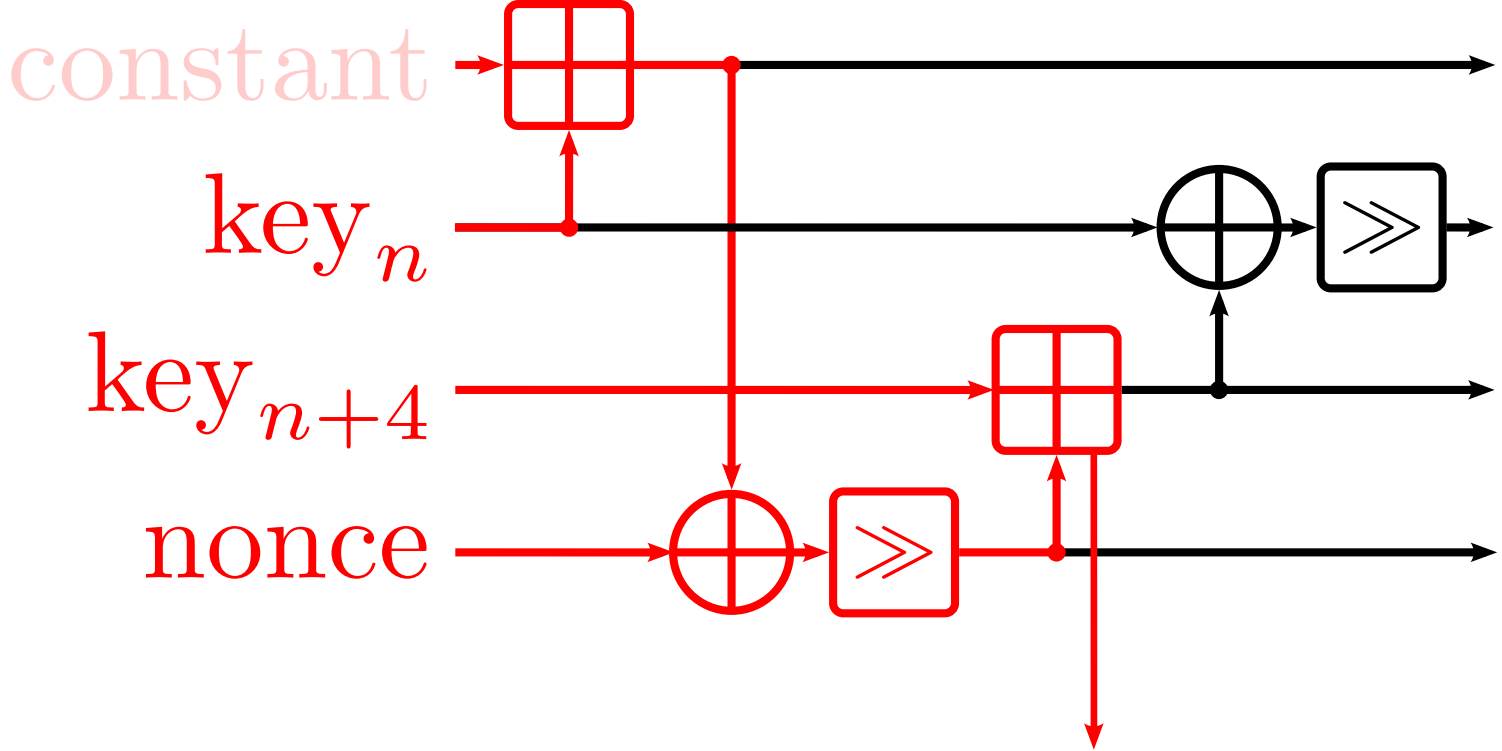

Correlate intermediate value with EM measurement