privacy

privacy

privacy

non-public

privacy

tool for
thought

security

non-public

privacy

tool for
thought

security

non-public

privacy

tool for thought

liberty from intrusion

security

non-public

virtual

privacy

real

tool for thought

liberty from intrusion

Christopher Hitchens

Saddam Hussein

Kim Jong-un & Kim Jong-il

Ali Khamenei

GEORGE ORWELL'S 1984

Adapted by NICK LANE

Directed by TONY ESTRELLA

sandra feinstein-GAMM theatre

APRIL 26 - MAY 27

401.723.4266

GAMMTHEATRE.ORG

172 Exchange St., Pawtucket, RI

中华人民共和国万岁
世界人民大团结万岁

Edward Snowden

U.S. INTELLIGENCE FUNDING

National Intelligence Program leaked by E. Snowden

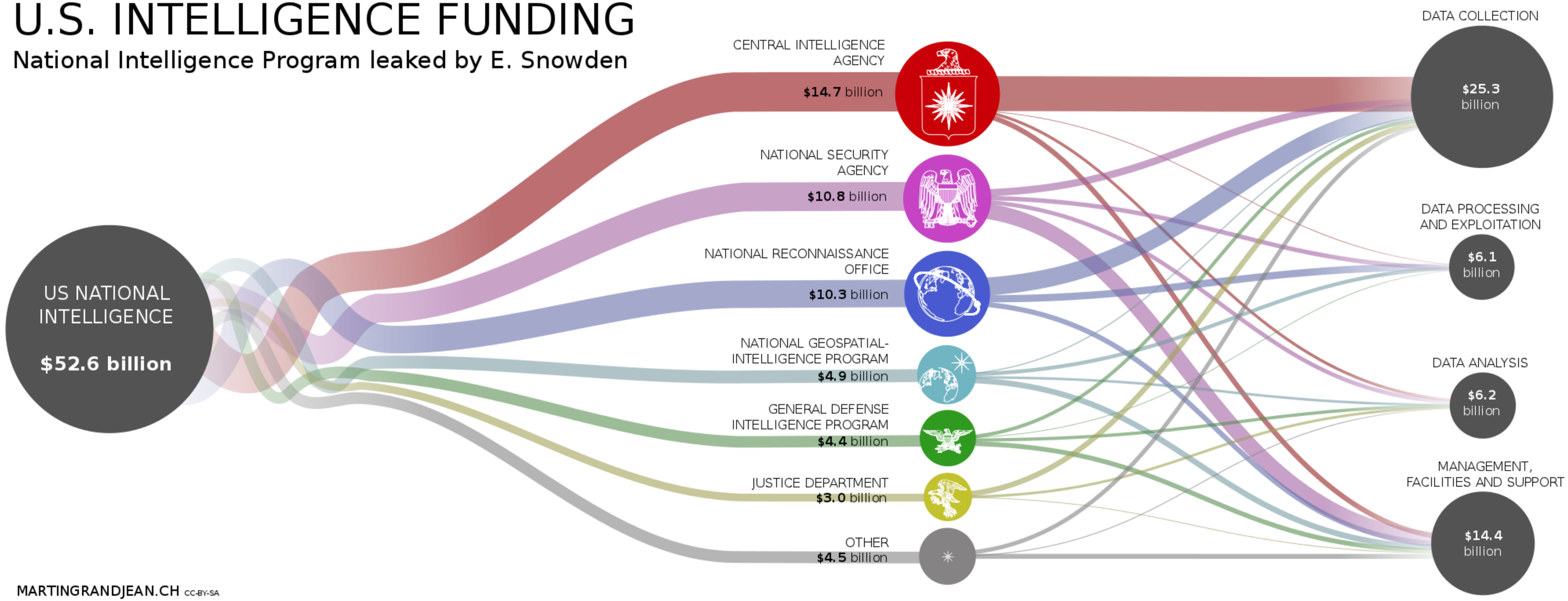

MARTINGRANDJEAN.CH CC-BY-SA

Source: FY2013 Congressional Budget Justification Book
Data published by W. Andrews and T. Lindeman in Washington Post Aug. 29, 2013.

(TS//SI//NF) PRISM Case Notations

P2ESQC120001234

PRISM Provider
- P1: Microsoft
- P2: Yahoo
- P3: Google
- P4: Facebook
- P5: PalTalk
- P6: YouTube
- P7: Skype
- P8: AOL
- PA: Apple

Fixed trigraph, denotes PRISM source collection

Year CASN established for selector

Serial #

Content Type
- A: Stored Comms (Search)
- B: IM (chat)
- C: RTN-EDC (real-time notification of an e-mail event such as a login or sent message)
- D: RTN-IM (real-time notification of a chat login or logout event)
- E: E-Mail
- F: VoIP
- G: Full (WebForum)
- H: OSN Messaging (photos, wallposts, activity, etc.)
- I: OSN Basic Subscriber Info
- J: Videos
- . (dot): Indicates multiple types

Current Efforts - Google

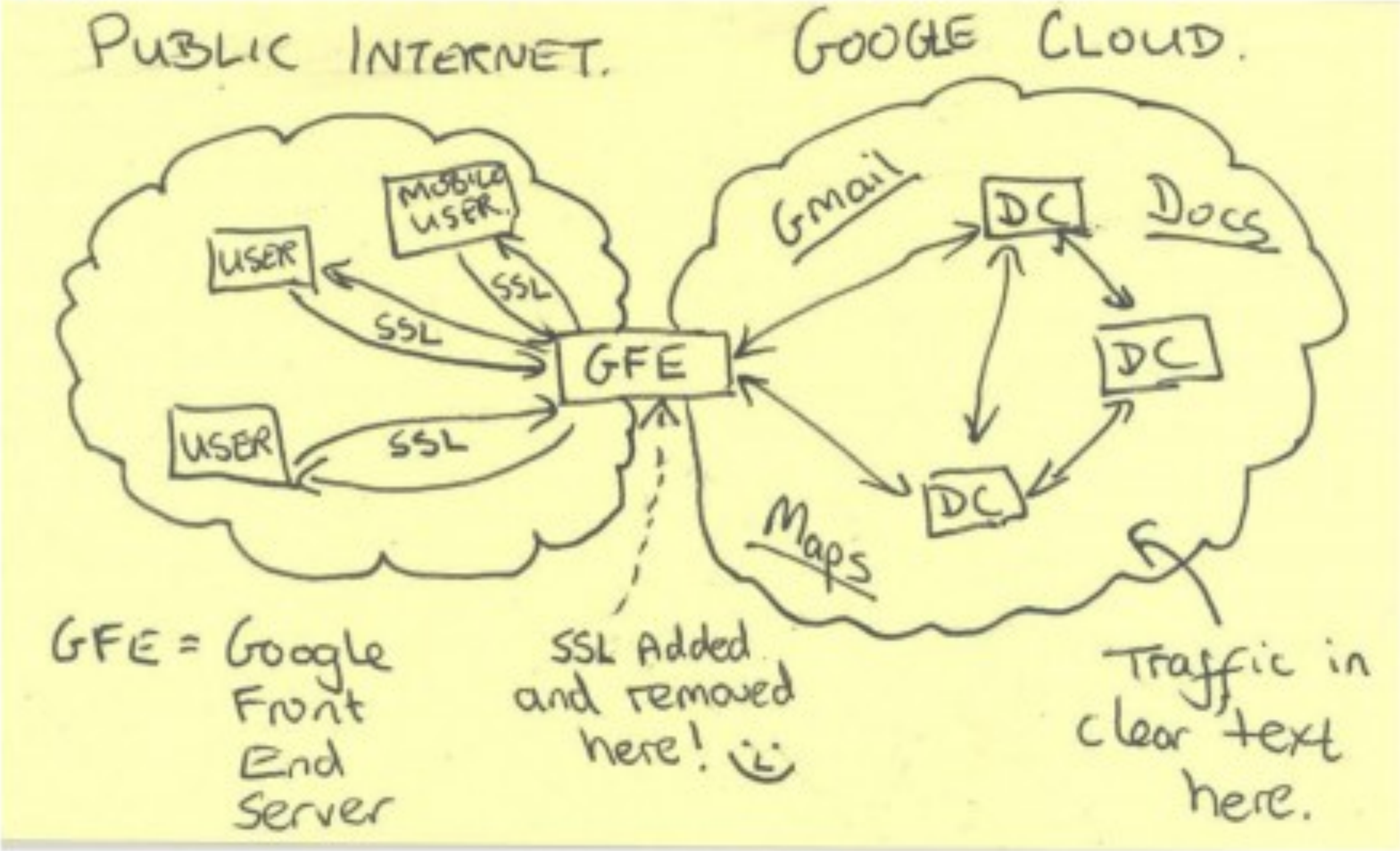

NSA
overreach

leaky apps

NSA
overreach

leaky apps

pattern of life

NSA overreach

leaky apps

smurfs
and ANT

pattern of
life

NSA
overreach

leaky apps

smurfs
and ANT

data

pattern of
life

NSA
overreach

leaky apps

smurfs
and ANT

data

metadata

pattern of
life

NSA
overreach

leaky apps

smurfs
and ANT

data

metadata

encryption

pattern of
life

NSA
overreach

data

=

content

metadata

=

activity records

Filename:	Tadzik.jpg
Author:	Piotr Kononow
Date:	August 15, 2016 6:40:10PM
File:	5,312 × 2,988 JPEG 15.9 megapixels 3,393,448 bytes (3.2 megabytes)
Camera:	Samsung SM-G920F
Lens:	4.3 mm Max aperture f/1.9 (shot wide open) Auto exposure Program AE
Exposure:	1/402 sec f/1.9 ISO 40
Flash:	none

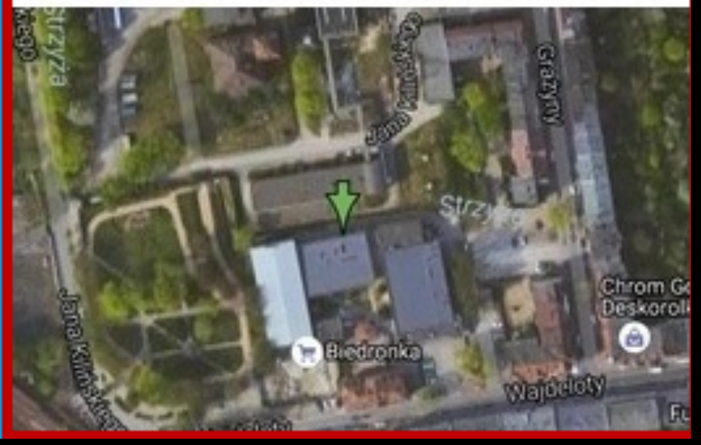

Filename:	Tadzik.jpg
Author:	Piotr Kononow
Date:	August 15, 2016 6:40:10PM
File:	5,312 × 2,988 JPEG 15.9 megapixels 3,393,448 bytes (3.2 megabytes)
Camera:	Samsung SM-G920F
Lens:	4.3 mm Max aperture f/1.9 (shot wide open) Auto exposure Program AE
Exposure:	1/402 sec f/1.9 ISO 40
Flash:	none

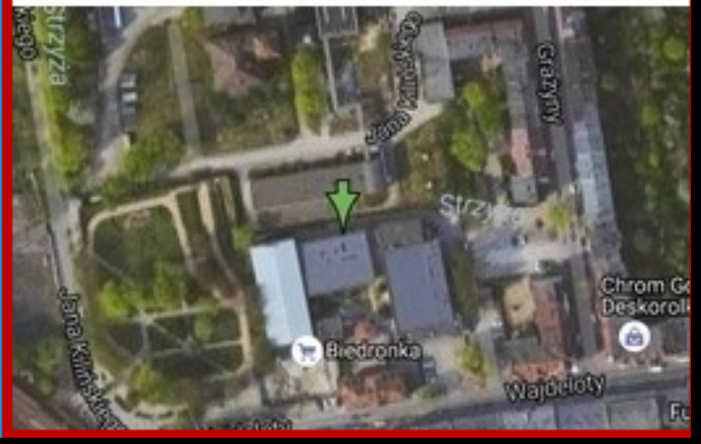

data

metadata

encryption

encryption

cryptography

encryption

cryptography

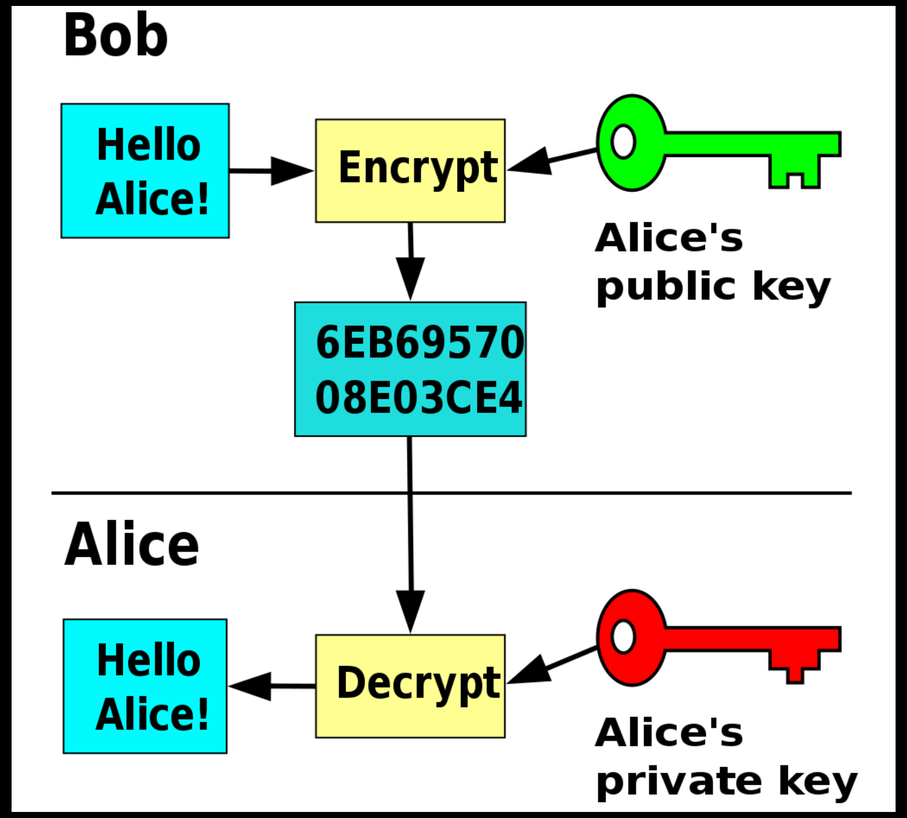

encryption

cryptography

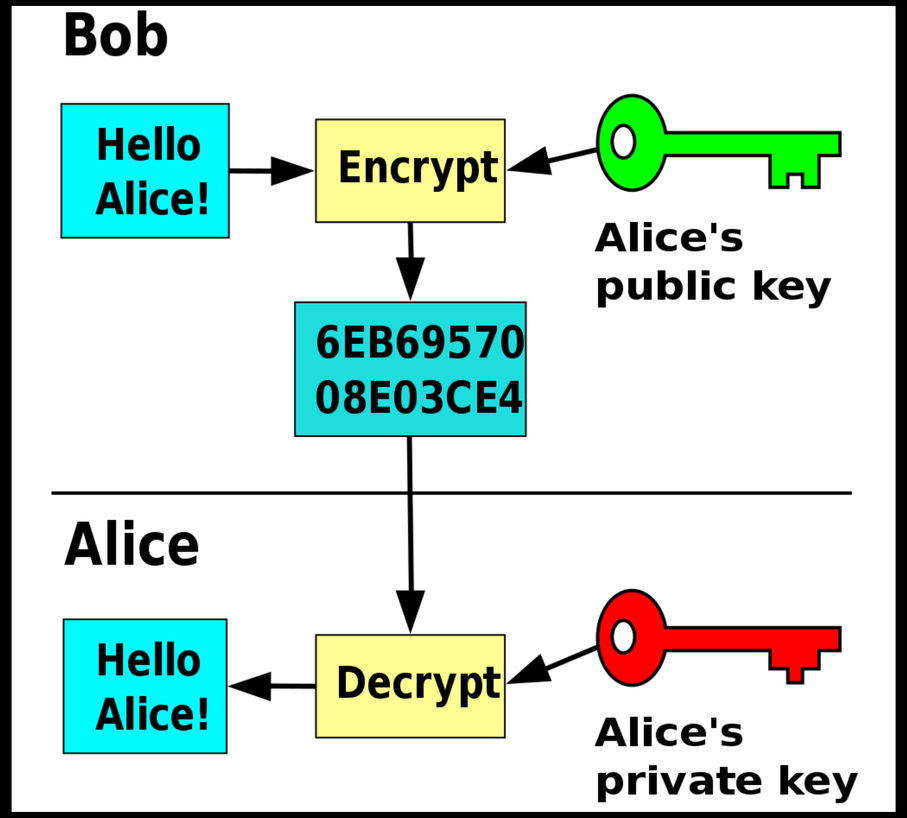

00:05:15.504
00:34:08.303
PERSONALITY PROFILE:
POTENTIAL ENGAGEMENTS
LINKS + CONNECTIONS
319
Luiz_C
219.288.341.100
CURRENT MOOD
DEDUCEMENTS
PERSUADABILITY INDEX
HIGH
WATCH HISTORY
CALENDAR
ACTIVITY HISTORY

What Information Are Giant Tech Companies Collecting From You?

INFORMATION THEY KNOW ABOUT YOU

with permission · if imported · if provided

	Google	Apple	Microsoft	Amazon	Facebook	Twitter	LinkedIn	Reddit	TikTok	Uber	Lyft
Name	●	●	●	●	●	● (if provided)	●	●	●	●	●
Birthday/Age	●	● (derived from name in Apple ID and salutation in iTunes account)	●	●	●	●	● (inferred by name and pronoun used)	—	●	●	●
Gender	●	●	●	●	●	●	●	—	●	—	● (you add your preferred pronoun)

	Google	Apple	Microsoft	Amazon	Facebook	Twitter	LinkedIn	Reddit	TikTok	Uber	Lyft
Phone Number	●	●	●	●	●	●	●	—	●	●	●
Email Address	●	●	●	● (including that of friends and other people)	●	●	● (including your work email if you use their customer/partner services)	●	●	●	●
Physical Address	●	●	●	●	●	—	—	●	●	●	●
Location	●	●	●	●	●	●	● (must opt in for GPS)	●	●	●	●
Time Zone	—	●	—	●	●	●	—	—	●	—	—
Language	●	●	●	—	●	●	●	●	●	●	●
Work Experience	●	●	—	—	●	—	● (including résumé and salary if filled out using their services)	—	—	—	—
Income Level	—	—	—	●	—	—	●	—	—	—	—
Education	—	—	—	●	●	—	●	—	—	—	—
Relationship Status	—	—	—	●	●	—	—	—	—	—	—
Political Views	—	—	—	—	●	—	●	—	—	—	—

Race/Ethnicity											
Religious Views											
Background Check/ Criminal Record										Uber: *if driver*	lyft: *if driver*
Government IDs (such as Social Security and driver's license numbers)					*deleted after 30 days*		*used to verify account, deleted within 14 days*			Uber: *for drivers or if requesting alcohol through UberEats*	lyft: *if driver*
Payment Information							*if registered for a premium service*				
Credit Card Information				*including credit history information*			*if registered for a premium service*			Uber: *Uber Visa card*	
Purchase History/Activity		*if purchased through their products*			*if purchased through their products*			*if purchased through their products*			
Contacts and Their Information		*if you share content with or invite them*		*only those listed in your addresses*			*your information is also collected when others import their contacts.*			Uber: *if selected to split fares with*	
Calendar Events					*Events on Facebook*						
Interests											
Likes and/or Follows											

	Google	Apple	Microsoft	Amazon	Facebook	Twitter	LinkedIn	Reddit	TikTok	Uber	Lyft
Social Networks and Contacts	—			—	—	—	—	—		Uber	—
Devices Used										Uber	
Mobile Carrier			—	—				—		Uber	
Browser Information										Uber	
Browsing History		—					—			—	—
Search History		—								—	—
Websites Visited										Uber	
Interaction of Apps, Browsers, and Devices With Their Services										Uber	
Internet Service Provider	—		—			—		—	—	—	—
IP Addresses							and proxy server	saves only the IP Address used to create account after 100 days		Uber	
Operating System			—	—						Uber	

	Google	Apple	Microsoft	Amazon	Facebook	Twitter	LinkedIn	Reddit	TikTok	Uber	Lyft
Ads Clicked/Viewed/ Interacted With	●	●	●	●	●	●	●	●	●	●	●
Apps You've Installed/Used	●	●	● *from Microsoft store*	●	●	●	● *only theirs*	—	●	●	●
Content You View or Engage With	●	—	●	●	●	●	●	●	●	—	●
Information About the Things Near Your Device (Wi-Fi, Bluetooth, Etc.)	●	●	●	●	●	—	—	●	—	—	● *Wi-Fi data*
Mobile Sensor Data	●	—	—	—	—	—	—	—	—	●	● *if driver*
Facial Recognition Data	—	—	● *if "People" is enabled on photo settings*	●	●	—	—	—	●	● *to verify identity of drivers and delivery partners*	—
Keystroke Patterns/ Mouse Movements	—	—	—	● *page interaction information*	●	—	—	—	●	—	—
Dates and Times of Use	●	●	●	●	●	●	●	●	●	●	●
Usage Data	—	—	●	●	●	●	●	●	●	●	●
Voice Data	●	● *if applying for employment*	● *and handwriting patterns*	●	—	—	—	—	—	—	—
Phone Calls	●	—	●	—	●	—	—	—	—	● *between rider and driver*	● *between rider and driver*

Emails Written and Received				only to them		only to them					
Documents and Spreadsheets You Create											
Chat Conversations/ Messages										between rider and driver	between rider and driver
Photo Uploads				if collected/stored using their services; includes profile photo						profile picture and photos submitted to customer service	profile picture
Video Uploads											
Videos Watched											
Video Comments											
Music											
Books											
Games											
Gaming Interactive Data											

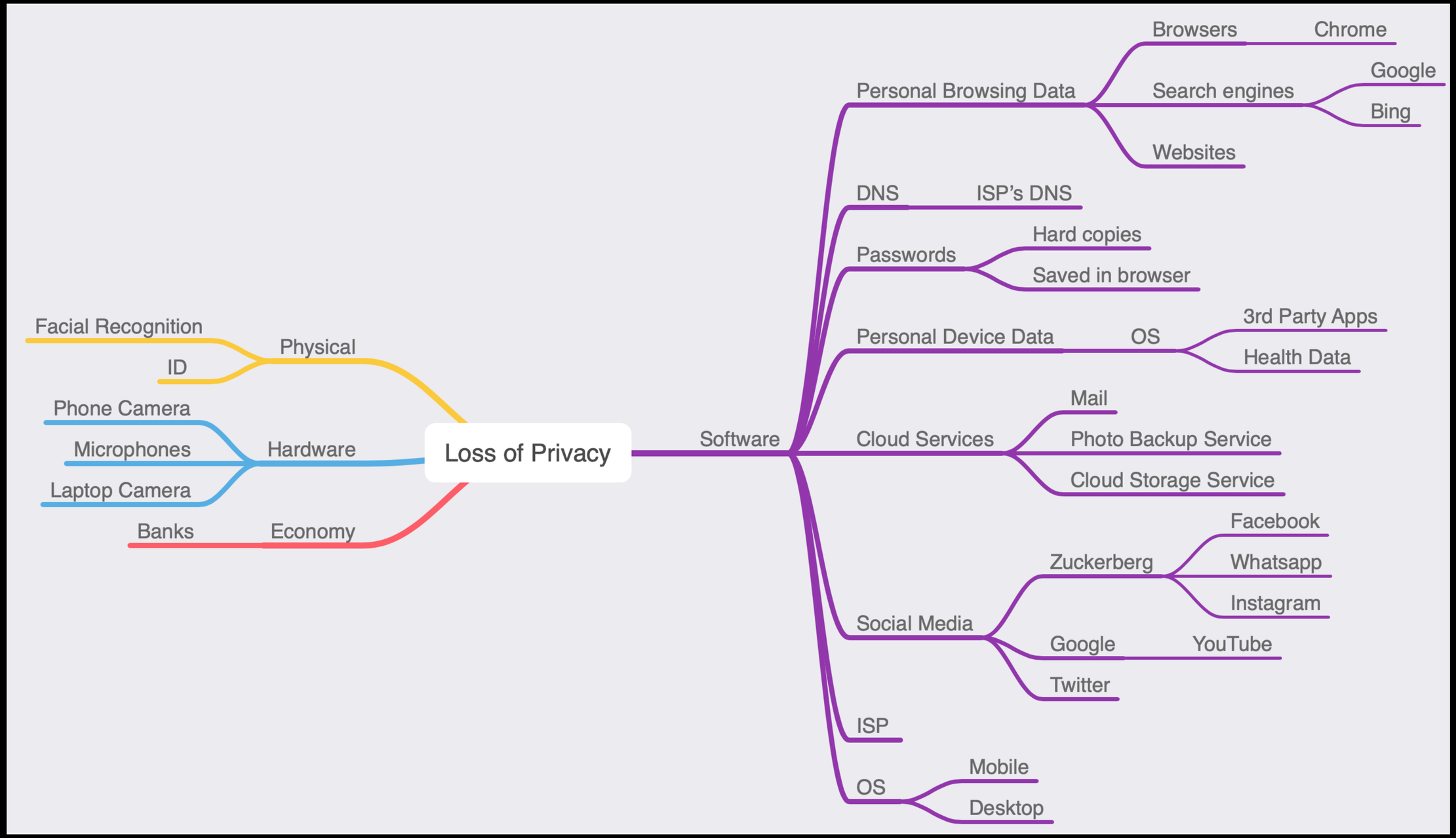
Loss of Privacy
Physical
Facial Recognition
ID
Hardware
Phone Camera
Microphones
Laptop Camera
Economy
Banks
Software
Personal Browsing Data
Browsers
Chrome
Search engines
Google
Bing
Websites
DNS
ISP's DNS
Passwords
Hard copies
Saved in browser
Personal Device Data
OS
3rd Party Apps
Health Data
Cloud Services
Mail
Photo Backup Service
Cloud Storage Service
Social Media
Zuckerberg
Facebook
Whatsapp
Instagram
Google
YouTube
Twitter
ISP
OS
Mobile
Desktop

so… what can we do?

1. use the correct software and practices

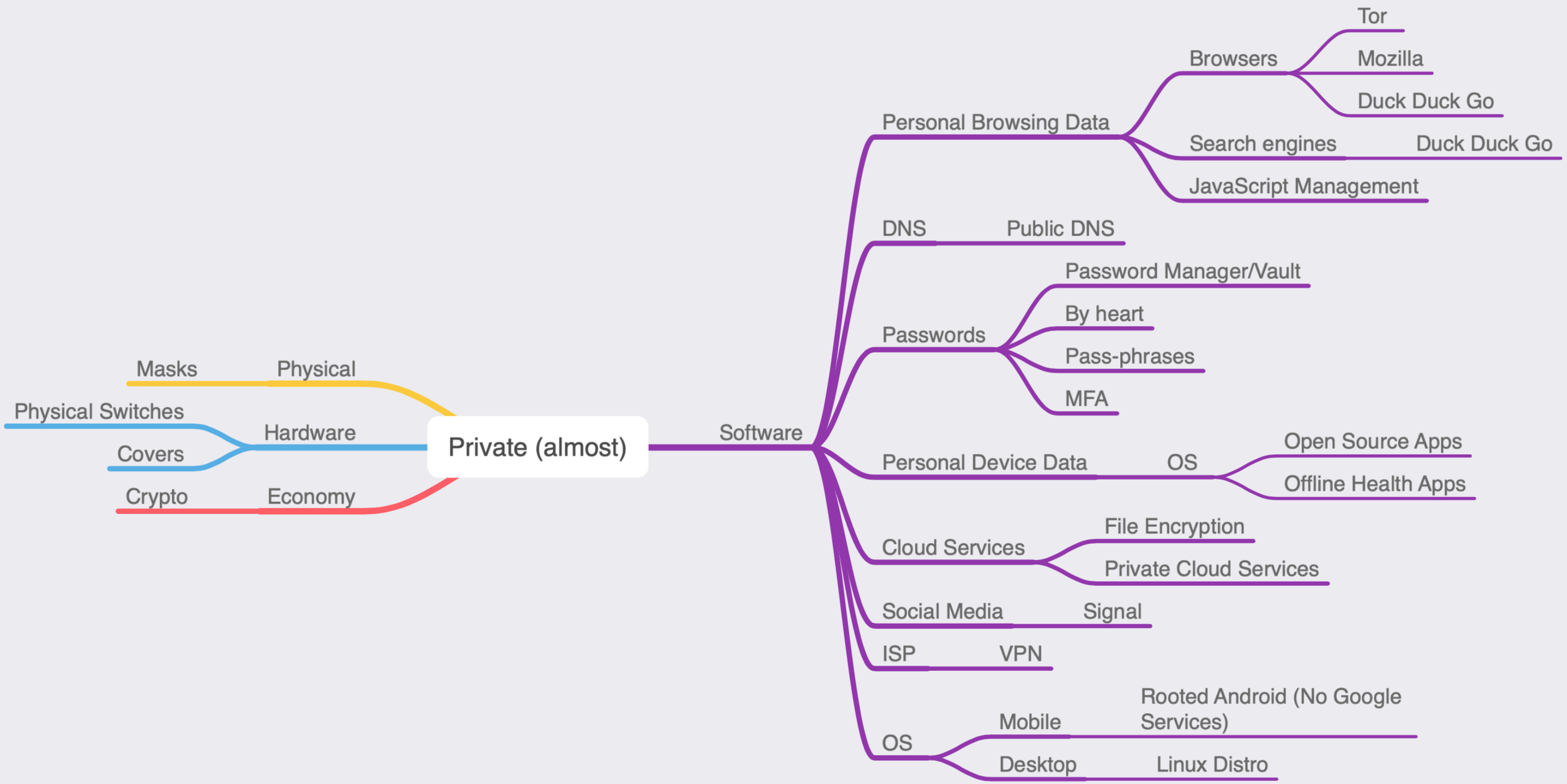
Private (almost)
Physical
Masks
Hardware
Physical Switches
Covers
Economy
Crypto
Software
Personal Browsing Data
Browsers
Tor
Mozilla
Duck Duck Go
Search engines
Duck Duck Go
JavaScript Management
DNS
Public DNS
Passwords
Password Manager/Vault
By heart
Pass-phrases
MFA
Personal Device Data
OS
Open Source Apps
Offline Health Apps
Cloud Services
File Encryption
Private Cloud Services
Social Media
Signal
ISP
VPN
OS
Mobile
Rooted Android (No Google Services)
Desktop
Linux Distro

so… what can we do?

1. use the correct software and practices
2. investigate before using

so… what can we do?

1. use the correct software and practices
2. investigate before using
3. raise awareness

吉慈
五大訴求
一不可

thank you!

any questions?

contribute!

this presentation and more resources are available in GitHub:

https://github.com/alito93/privacy-advocate

sources

- Christopher Hitchens at Commonwealth Club of California: https://www.youtube.com/watch?v=YnjyZ-VRWqg

- Snowden leaks: https://blokt.com/guides/edward-snowden-leaks