LED night light – teardown & reverse engineering

Night lights are a cool way for having a dim source of light in our bedrooms after the sun sets, useful for basic guidance as well as for having emotional comfort, according to scientific research where psychological effects were studied.

For fun and out of curiosity, I have reversed engineered the *circuit*, the *working principle* and the overall assembly in order to find out how such basic things work. Gaining an understanding of how electronic devices are built improves our expertise and allows us to independently design our own systems.

This teardown of the current item was done a few time ago and I didn't managed to take pictures of the circuit board along with the case. So I am going to illustrate just the schematic of the PCB.

This is going to be a short article because the main device subjected to teardown has a very simple schematic and is based on few components inside of it.

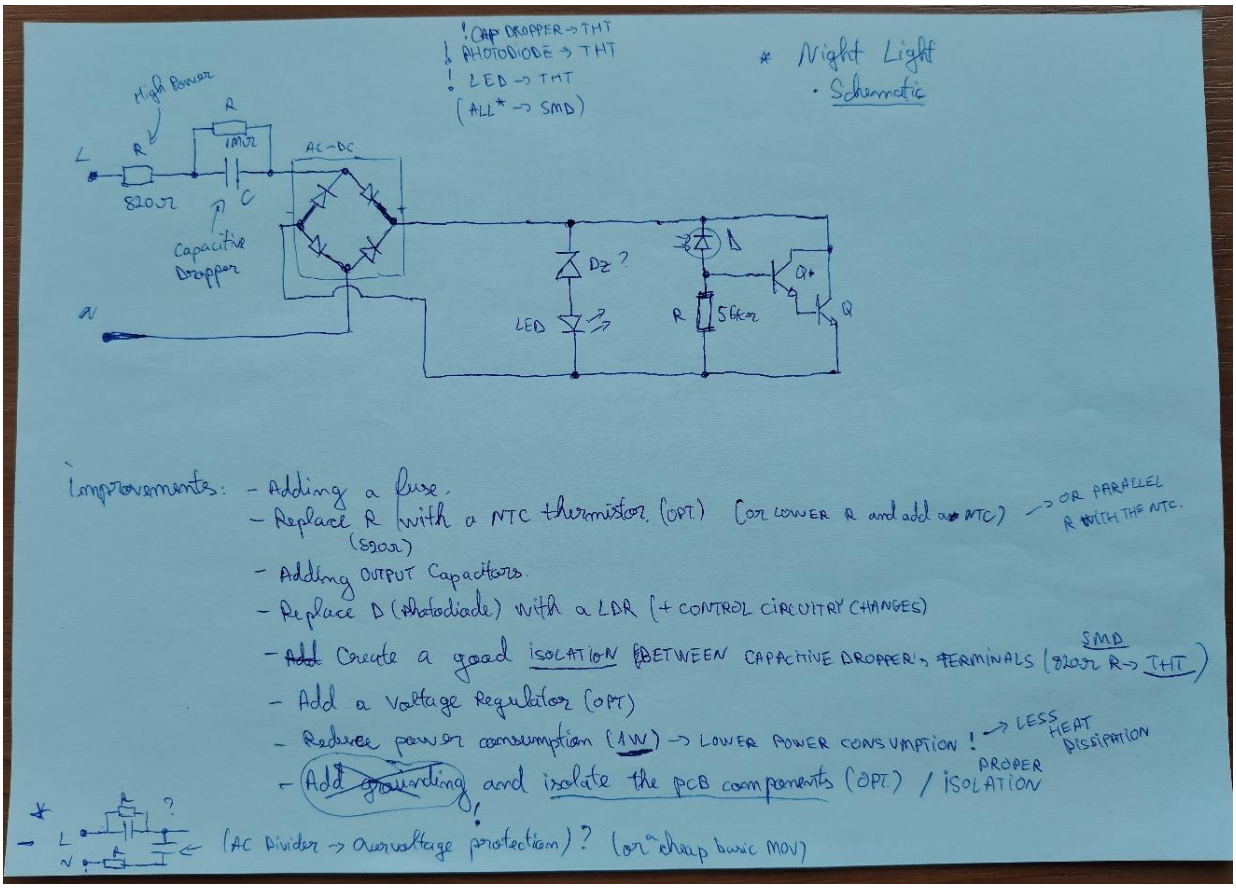

- Circuit schematic of the LED night light. -

Design analysis – overview

I also considered to mention a few improvements that could be implementes so that our device will consume less power while also draw less current.

As I said, the circuit diagram is simple, contains few components and has a cool design that simplifies everything, from lowering the voltage to switching the LED based on the presence of any light source nearby.

The power comes in and goes through a series resistor which limits the inrush current drawn by the capacitive dropper at startup which its job is to drop some voltage across it and limit the load current while eliminating the need for a transformer to lower the voltage, so the cost of the night light stays low.

After dropping a part of the mains voltage, the next step is to rectify our AC voltage so powering each semiconductor component with the required polarity is possible. There are no smoothing capacitors on the output side which are not absolutely necesary because the flickering caused by the AC ripples are not visible to the human eye which are around 100Hz.

Light is emitted by a single THT white LED component which is enough in order to not cause any discomfort. Bright spots in a dark room are easy to observe because the human eyes are focused on any possible lights sources.

There is a Zener diode in series with the LED which acts as a current limit which causes a safe working voltage for it.

The circuit driving the LED is shunting the voltage across the both LED+Zener diode group so there that current there will be almost no current through so no light is emitted.

Light is sensed by a photodiode that lets current to flow and that is biasing the two transistors connected as a Darlington pair, which are stealing the current from the LED by dropping the voltage to a level which doesnt surpass the threshold of the LED+zener group.

NOTE: Creating products well designed with a low build cost its likely unachievable by the manufacturer. Compromises are the way to go so the customer's interest doesnt fade away after looking at the sell cost, like using few parts and a simple schematic, which always has some downsides.

Improvements & encountered issues.

That being said, let's take a further look at what could possibly be done better, what improvements might help achieve a better design and how that might impact the safety for the user.

Some tips for improving the circuit and the layout have been written in the schematic picture available above. Not all of them have to be actually added in the enhanced schematic.

First thing I notice here is related to how the LED light comes goes off. During daytime, while there is still light from the sun, this light goes off. The problem rises from the transistors conducting as they draw power to keep the LED turned off. So there is still current flowing through the circuit. In fact, there is a probability that the device consumes more power while its off compared to when its on, while its lighting up.

Having a capacitive dropper helps to dissipate the excessive power as reactive power. If there was a resistive dropper in place of the capacitor, that would've been a problem, as the resistors would get hot and dissipate extra power as heat, which is not an efficient way to handle such tasks. (A resistive dropper uses high value resistors rated for higher dissipated power, in bigger packages).

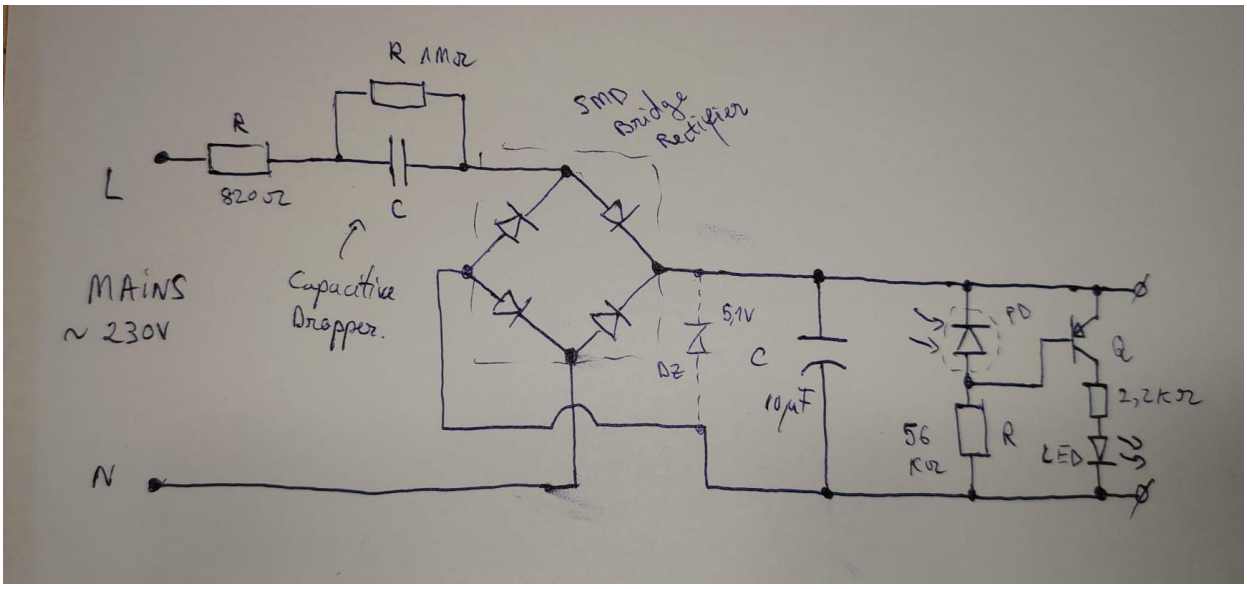

To address this design issue, I would suggest a new design above to use an PNP transistor as a high-side switch for the LED with an high value pull-down resistor connected from its base to ground and reconnect the photodiode across the base and emitter terminals so that when there is no light, the transistor will saturate and it will essentially let current flow through the LED, so it lights up. If sun light is present, the photodiode conducts and lowers transistor's current base, so it switches off.

Power is lost across the inrush current limiting resistor (820ohms resistor) and it would be great to lower its value or add an NTC thermistor, but that would increase the cost of the BOM as expected. The second usage of this resistor is to act as a fuse, in case the

capacitor dropping some part of mains voltage shorts out, the resistor will blow up, but most likely, more components will blow up before the resistor like the bridge rectifier.

For ensuring safety measures for the working the PCB layout has to be rightly implemented.A thing to start with is having a good clearance/spacing between AC mains traces and between voltage dropping capacitor's terminals.

A nice thing to see it has been used is the discharging (bleeding) resistor across the dropper capacitor, which prevents any harmful high voltage charge being retained, which can shock the user.

I believe the LED should be replaced with one that has a different color. Warm white, orange, or even red tones would feel much more comfortable and less harsh than the typical white LEDs.

Conclusions

This teardown was an excellent exercise. My primary goal in reverse engineering is to understand exactly how these electronic modules function, as it sharpens my analytical skills. Each project builds the background experience necessary to predict schematics in unfamiliar or broken devices. Dealing with unknown designs helps you get better at using multimeters, that's a great chance to learn how to take proper measurements.

While I initially expected a brief description of the PCB and circuit, the project took an unexpected turn when I dove into the theory of operation. What appears basic at first glance often hides a sophisticated engineering process.

Thank you for taking the time to read my article!