A1

ITEM	DESCRIPTION	MATERIAL	PATT.	REMARKS	WEIGHT
1	PUMP SHAFT	STAINLESS STEEL BS EN 10088-3 / 1.4057	-	-	55.1

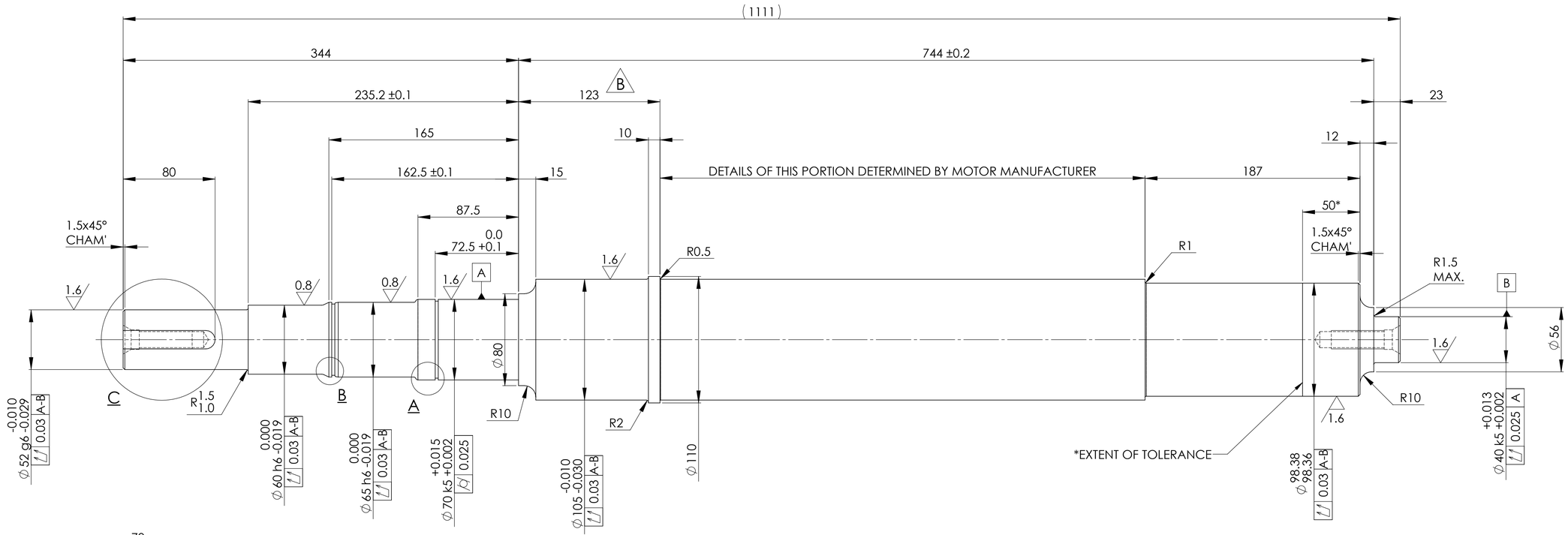

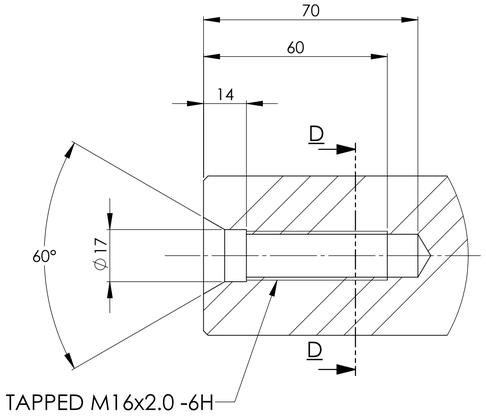

DETAIL C
SHAFT TAPPING ONLY
TYPICAL BOTH ENDS
SCALE 1 : 1

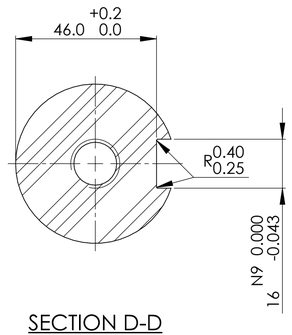

SECTION D-D
SCALE 1 : 1

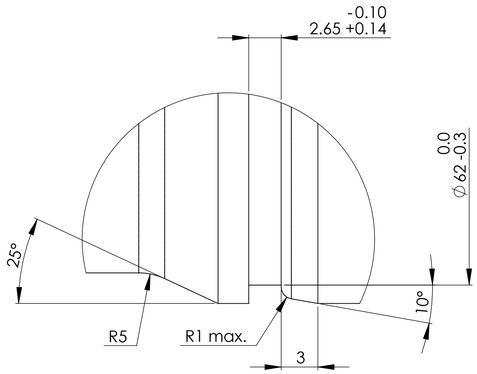

DETAIL B
SCALE 4 : 1

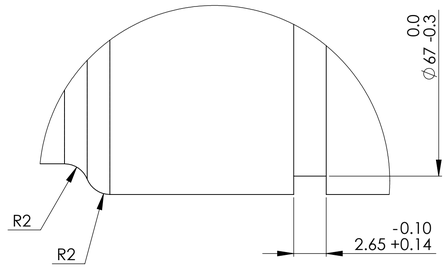

DETAIL A
SCALE 4 : 1

NOTES:

1. REMOVE ALL BURRS AND SHARP EDGES
2. ALL UNSPECIFIED CHAMFERS TO BE 1x45°

REV.	DESCRIPTION	DATE	APPROVED
B	DIM. NOW 123 TO SUIT ROTOR	23/06/21	D.W.
A	FIRST RELEASE	12/05/21	A.M.

© THE COPYRIGHT IN THIS DRAWING BEING THE PROPERTY OF BEDFORD PUMPS LTD SUCH COPYRIGHT MUST NOT BE TREATED AS PRIVATE AND CONFIRDENTIAL. THE DRAWING IS NOT TO BE COPIED OR COMMUNICATED TO ANY THISRD PARTY OR USED FOR THE PURPOSE OF MANUFACTURE WITHIOUT PRIOR PERMISSION

WEIGHT-KGS

CASTING	FIN M/C'D
EST.	EST.
ACTUAL	ACTUAL

WELDING

HEAT TREATMENT

TEST PRESSURE

THIRD ANGLE PROJECTION

DIMENSIONS IN MILLIMETRES

DIMENSIONS MARKED "CALC" ARE INCLUDED TO SIMPLIFY CALCULATIONS WITHOUT AFFECTING LIMITS GIVEN FOR OTHER DIMENSIONS. SHARP CORNERS AND HOLES TO BE CHAMFERED 0.3 MIN. 0.6 MAX. ALL MACHINED SURFACES TO BE PARALLEL, CONCENTRIC AND SQUARE, ETC. WITHIN THE LIMITS OF SIZE AND TOLERANCE GIVEN. MACHINED DIMENSIONS NOT DIRECTLY TOLERANCED TO BE AS BELOW.

NOMINAL DIMENSIONS	0.5 UP TO 6	OVER 6 UP TO 30	OVER 30 UP TO 120	OVER 120 UP TO 315	OVER 315 UP TO 1000	OVER 1000
TOLERANCE	±0.1	±0.2	±0.3	±0.5	±0.8	±1.2

SURFACE ROUGHNESS (MICROMETERS) √ EXCEPT AS STATED

SCALE: 1:2

TITLE
PUMP SHAFT
-

USED ON	DRAWN
P3574-2	S.B.
KILLINGHOLME	12/05/21

SIMILAR TO:- 17495

BEDFORD PUMPS LTD.

DRG. No. 17916 B

SHEET 1 OF 1