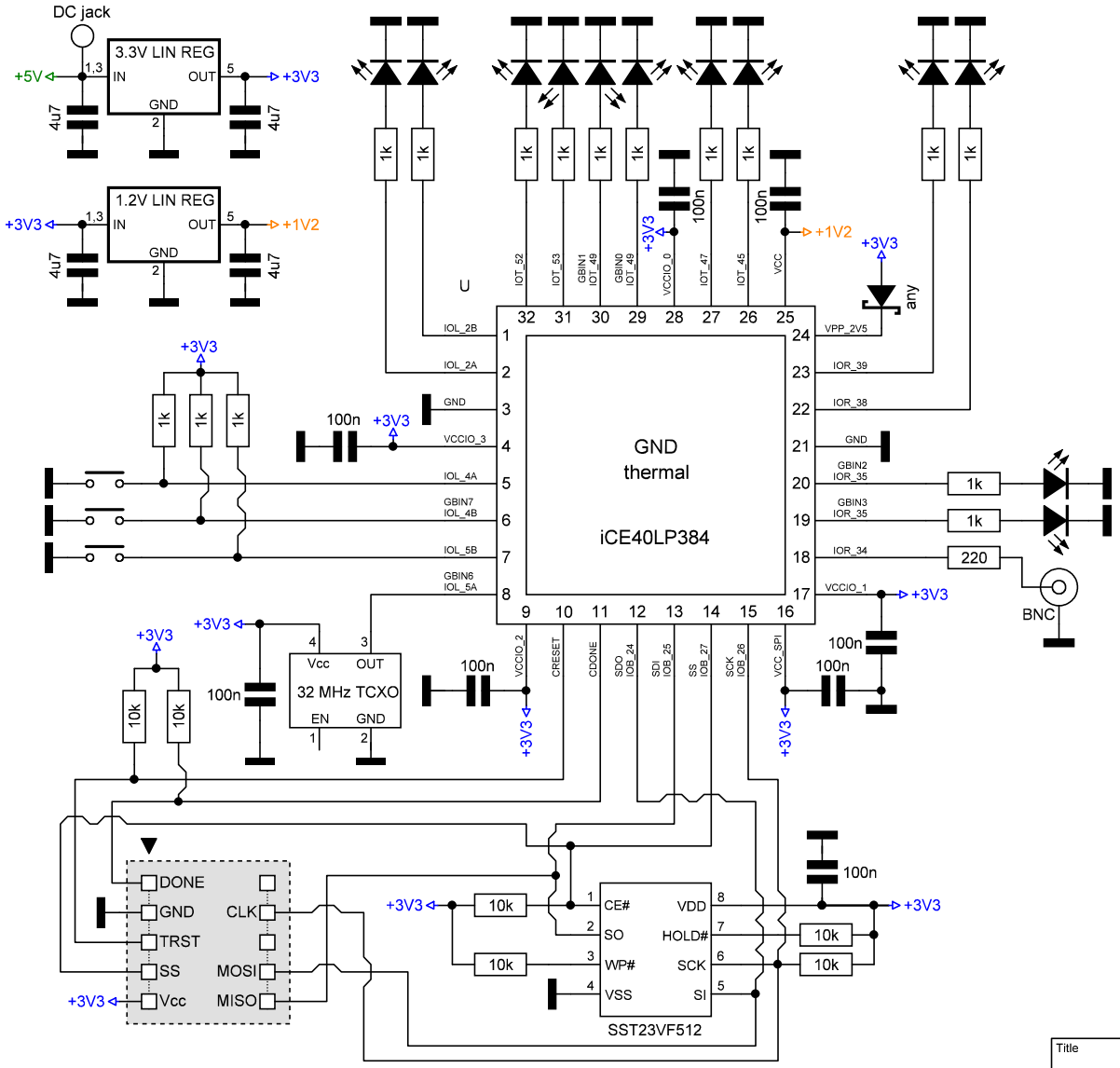

Title	Version
iCE40LP384 demo board	v3
	Type: Development
Created by: Aljaz Blatnik	Date: 27/11/2023
Project: GNSS receiver	Page: 1 / Total page count: 1