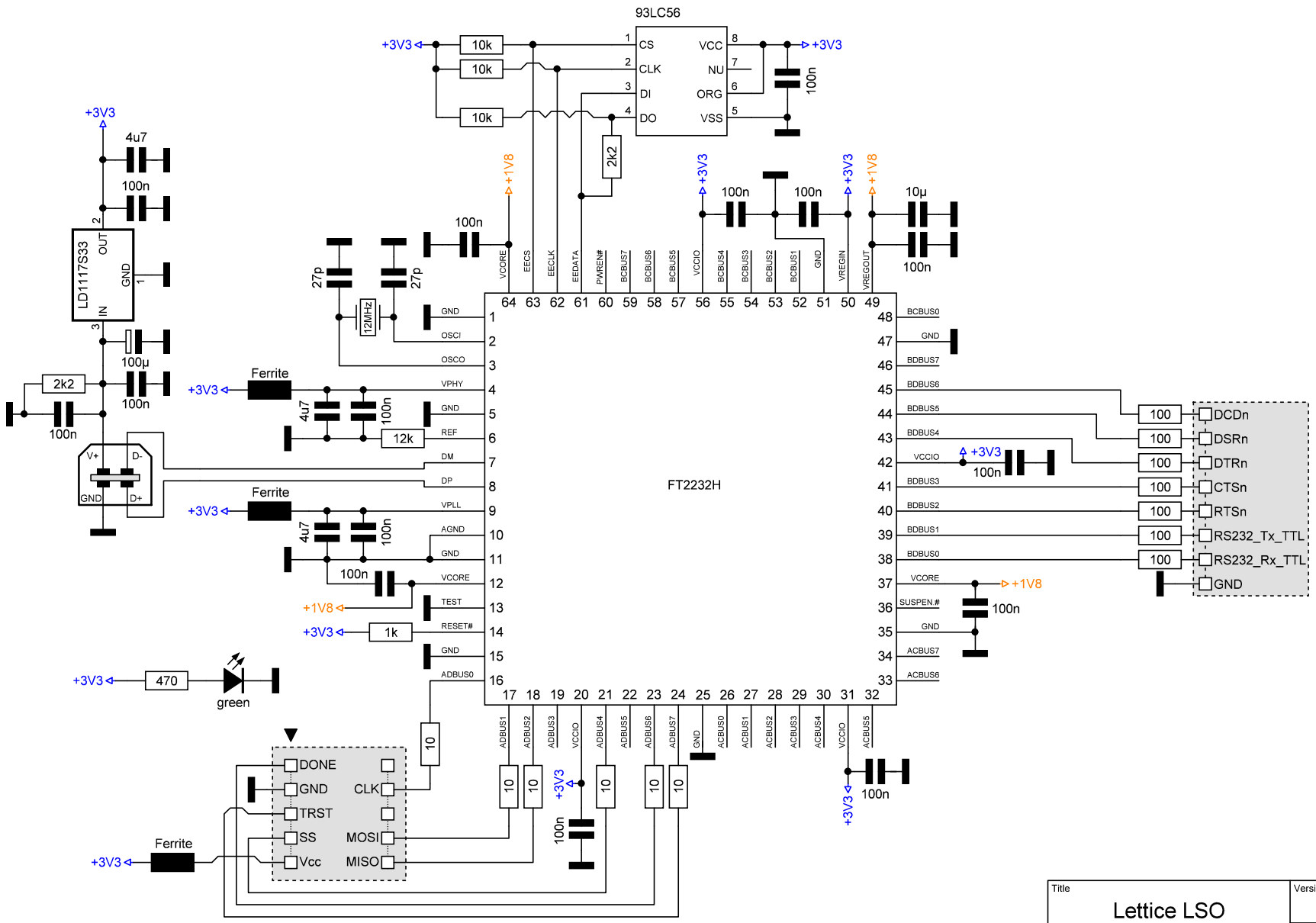

Title	Version
Lettice LSO programmer	1v1
	Type: Development
Created by: Aljaz Blatnik	Date: 25/11/2023
Project: GNSS receiver	Page: 1 / Total page count: 1