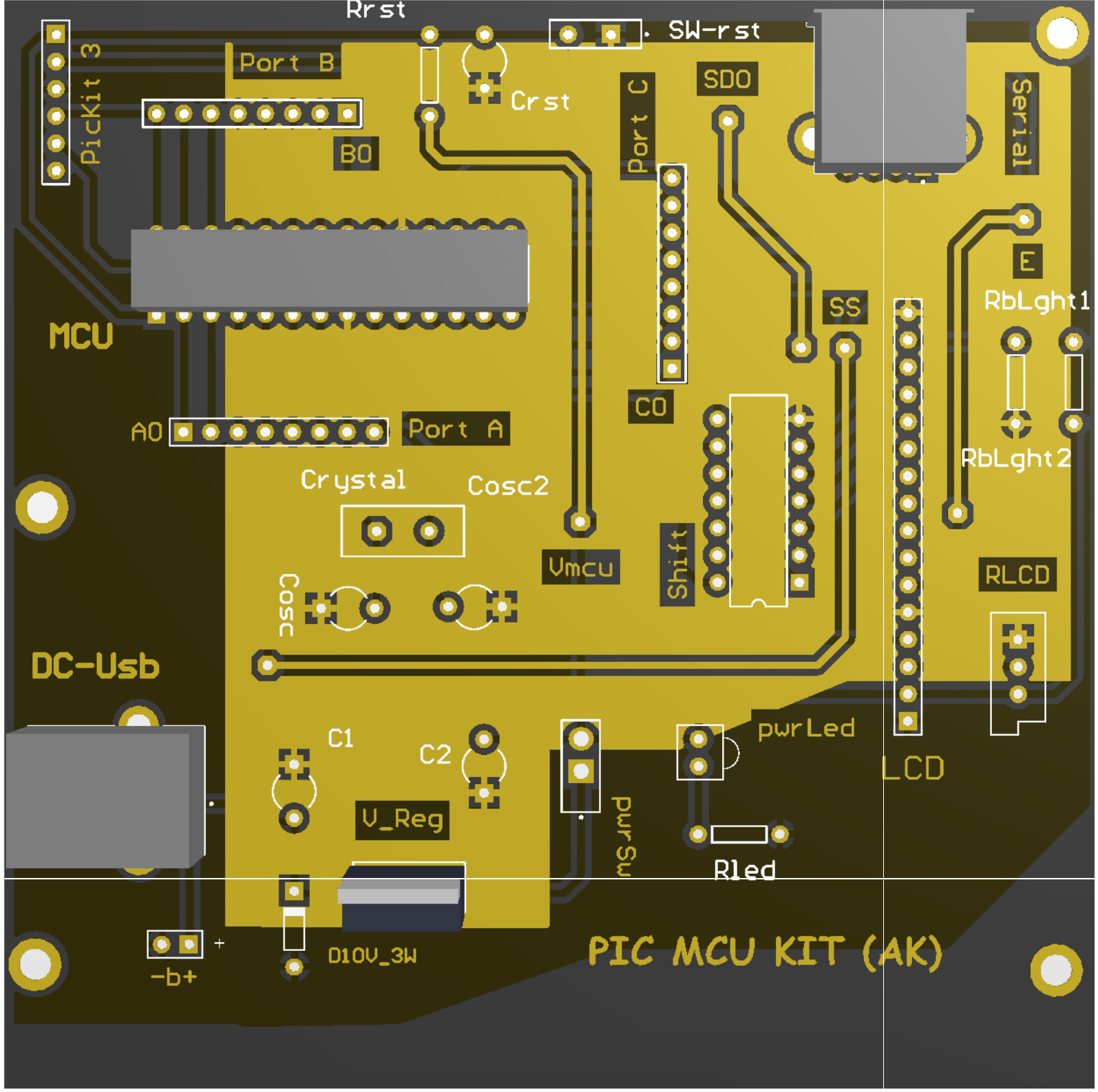
Rrst
SW-rst
Port B
Crst
PicKit 3
B0
Port C
SDO
Serial
E
RbLght1
MCU
SS
C0
A0
Port A
RbLght2
Crystal
Cosc2
Vmcu
Shift
RLCD
Cosc
DC-Usb
C1
C2
pwrLed
LCD
V_Reg
pwrSw
Rled
-b+
D10V_3W
PIC MCU KIT (AK)

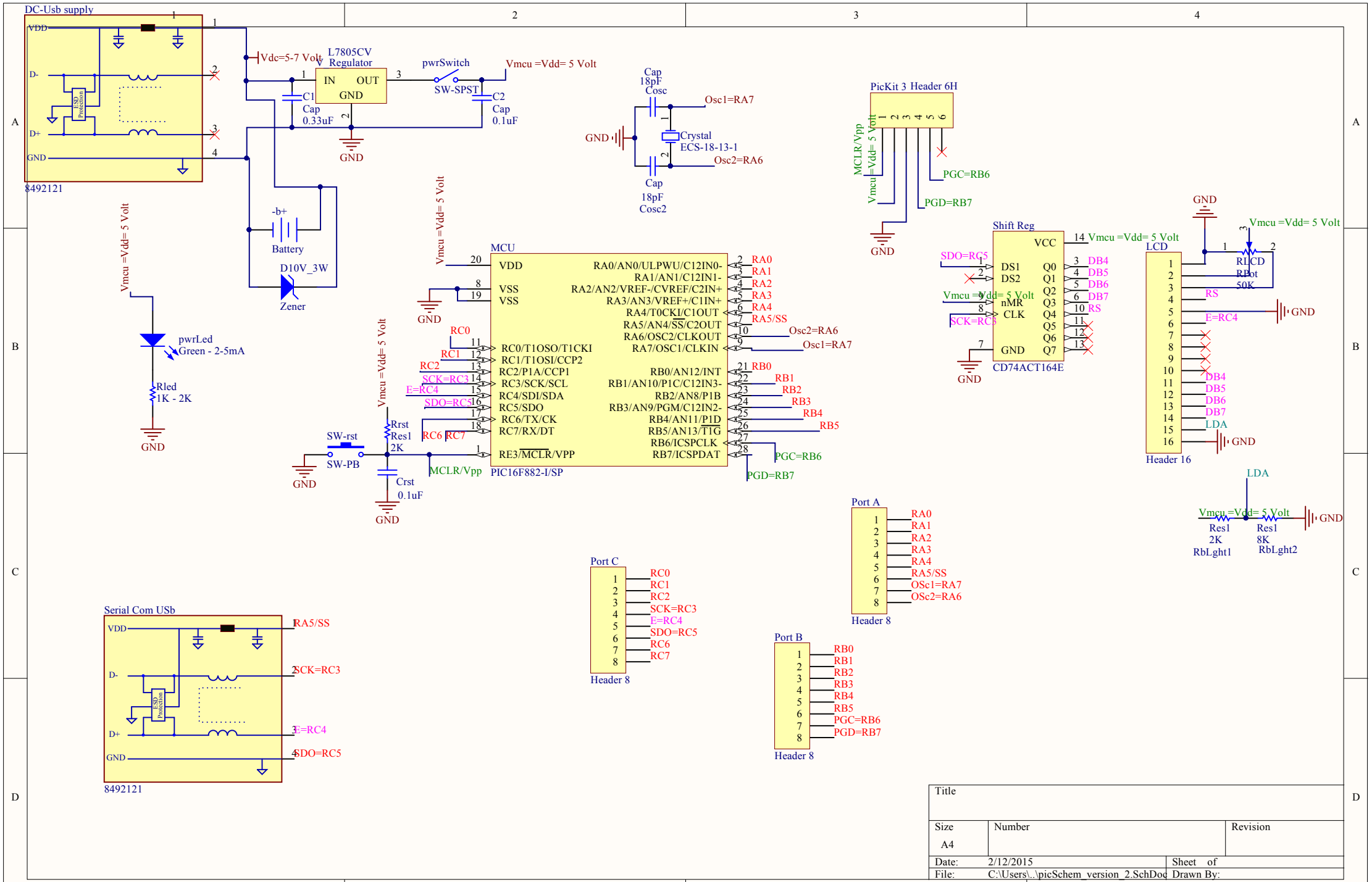

Title		
Size A4	Number	Revision
Date: 2/12/2015	Sheet of	
File: C:\Users\..\picSchem_version_2.SchDoc	Drawn By:	

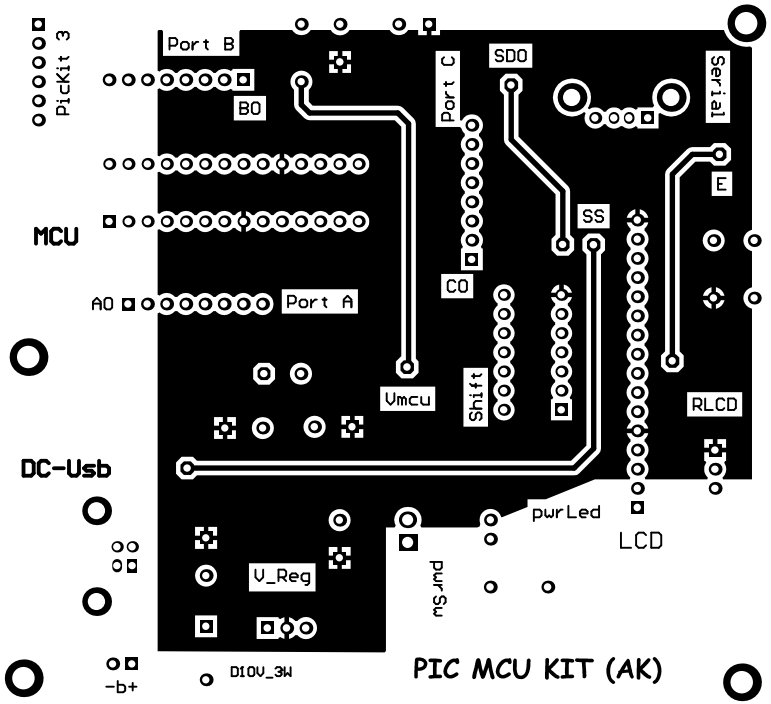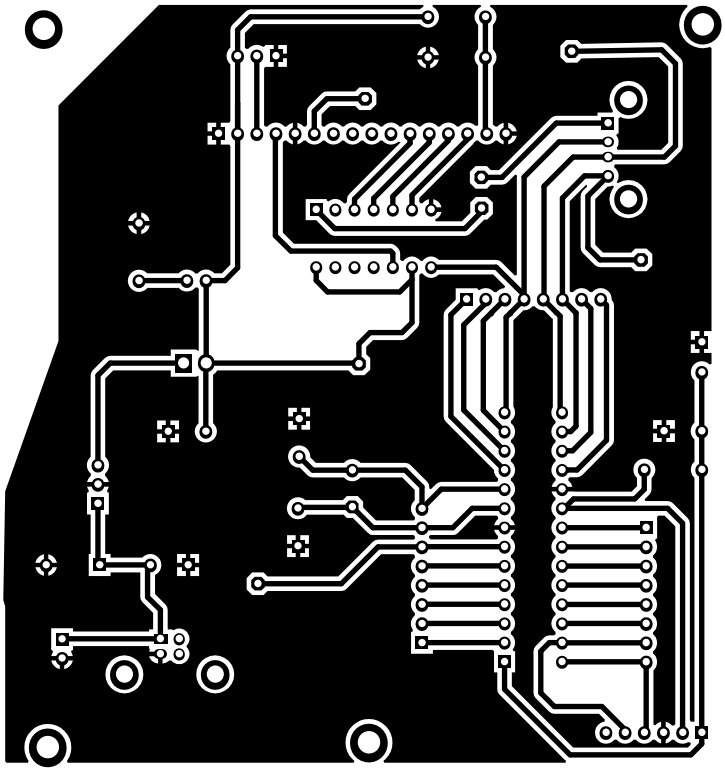
PicKit 3
Port B
B0
MCU
A0
Port A
DC-Usb
-b+
DI0V_3W
V_Reg
Vmcu
Port C
C0
Shift
SDO
SS
pwrSw
pwrLed
Serial
E
RLCD
LCD
PIC MCU KIT (AK)