ISA Transactions 144 (2024) 490–500

Contents lists available at ScienceDirect

ISA Transactions

journal homepage: www.elsevier.com/locate/isatrans

Practice article

A fault-tolerant control strategy to estimate and compensate the temperature sensor bias in supermarket refrigeration systems

Patrick Haffmans [a], Roozbeh Izadi-Zamanabadi [b,c], Hossein Ramezani [a,*]

[a] University of Southern Denmark, Denmark
[b] Department of Electrical Engineering, Aalborg University, Denmark
[c] Department RAD-RC, Technology Center, Danfoss, Denmark

ARTICLE INFO

Keywords:
Fault-tolerant control
Error estimation
Neural networks
Bias
Supermarket refrigeration systems

ABSTRACT

The paper proposes a data-driven fault-tolerant control (FTC) strategy to construct and accommodate the bias on ambient temperature measurements in supermarket refrigeration systems. The bias, which is caused by direct or indirect exposure of the sensor to the sun, can have a significant impact on the refrigeration system's energy consumption. Based on analysis of the real data a comprehensive model of the bias is developed and then used to generate realistic scenarios for testing the proposed FTC method. The FTC method uses a feed forward Neural Network (NN) as a black box model. The model is trained by active injection of perturbation signals during the night operations. During the Monte-Carlo tests, the strategy was implemented in a Plug & Play manner, demonstrating that substantial energy savings can be achieved during summer periods.

1. Introduction

The initiation of this study was prompted by the perceived need, as expressed in the feedback from maintenance engineers. This feedback was received following calls from some local supermarket owners who reported degraded performance during day operation. After detailed investigation of the problem the maintenance engineers realized that bias on the ambient temperature readings was the root cause of the problem. In supermarket refrigeration systems, a dedicated local supervisor unit uses the ambient temperature reading. This unit calculates the optimal energy set-points for both the pressure and temperature of the refrigerant as it exits the gas cooler. These calculated set-points are then provided to their respective local controllers. Thus, inaccurate or biased readings can negatively impact the performance of refrigeration systems. This is because these faulty readings cause the supervisor to calculate sub-optimal set-points, leading to increased energy consumption.

While it would be ideal to assume that ambient temperature sensors are correctly placed, in practice, it might not always be the case. For instance, clients may relocate the sensors to an inappropriate location during routine maintenance of the systems.

In the literature, the characteristics of the bias experienced by the ambient temperature sensor are generally provided by simplistic models. In [1], a fault diagnosis and diagnosis (FDD) scheme is developed for outdoor air supply temperature sensors, where an abrupt fixed bias of a small magnitude is applied. This similar experiment condition also appears on Ma and Wang [2]. In Reppa et al. [3] the sensor faults do have a time varying quality, but the fault severity does not reflect a realistic case, as it is needed in our study. Padilla et al. [4] and Wang et al. [5] present a case where sensor fault does behave in a severity that is of the correct magnitude, but the bias applied to the system is fixed. The mentioned works neglect the time varying property of the bias, which sunlight greatly impacts. When the time property is considered, the bias can be classified as an incipient fault, for which interesting statistical based detection methods based on Kullback–Leibler divergence have been proposed (see [6,7], and [8]). Although these methods have illustrated effectiveness in detecting incipient faults, they do not provide information on bias magnitude that can be used in a bias compensation strategy.

To the authors' best knowledge there are no papers that deal specifically with the sun associated bias experienced by the ambient temperature sensors.

The field of model-based fault-tolerant control (FTC) has been subject to extensive research and many of the proposed methods can be found in well-known references (see [9,10]). Ding [11] contains classical approaches that use grey-box modeling techniques to generate models of the system and then use model-based methods to handle the fault scenarios. Xiong et al. [12] proposes a dedicated FTC for a suspension system that is subjected to actuator fault and input quantization.

* Corresponding author.
E-mail addresses: pahaf19@student.sdu.dk (P. Haffmans), riz@es.aau.dk, roozbeh@danfoss.com (R. Izadi-Zamanabadi), ramezani@sdu.dk (H. Ramezani).

https://doi.org/10.1016/j.isatra.2023.10.033
Received 1 April 2023; Received in revised form 29 October 2023; Accepted 29 October 2023
Available online 31 October 2023
0019-0578/© 2023 The Authors. Published by Elsevier Ltd on behalf of ISA. This is an open access article under the CC BY license (http://creativecommons.org/licenses/by/4.0/).

Nomenclature

b_{amb}	Bias on the ambient temperature (K)
eff	Efficiency (energy recovery) (–)
h_{id}	Enthalpy at compressor outlet (ideal compression) (KJ/kg)
$K(s)$	Transfer function in bias compensator block
$\dot{m}_i$	Inlet mass flow of the considered unit (kg/s)
$\dot{m}_o$	Outlet mass flow of the considered unit (kg/s)
ΔP	Pressure difference (bar)
OD_{HPV}	High pressure valve opening degree ($\in [0, \dots, 100]$) (%)
OD_{REC}	Receiver valve opening degree ($\in [0, \dots, 100]$) (%)
P_{gc}	Gas cooler pressure (bar)
P_{rec}	Receiver pressure (bar)
P_{mt}	Suction manifold pressure (bar)
S_{c3}	Measured ambient temperature (K)
S_d	Compressor discharge temperature (K)
S_s	Compressor intake (suction) temperature (K)
S_{gc}	Measured Gas cooler temperature (K)
T_{amb}	Ambient temperature (K)
$\hat{T}_{amb}$	Estimated ambient temperature (K)
T_{gc}	Gas cooler temperature (K)
T_{pert}	Perturbation signal (K)
u_{CC}	Compressor capacity ($\in [0, \dots, 1]$) (–)
u_{FC}	Cooling fan capacity ($\in [0, \dots, 1]$) (–)
$\dot{V}_{vol}$	Volumetric flow (m^3/s)
W	Energy (kJ)
$\dot{W}_{comp}$	Compressor work (kW)
$\dot{W}_{FC}$	Fan work (kW)
β	bias component (K)
ϵ	Effectiveness (heat transfer) (–)
η_{is}	Compressor isentropic efficiency (–)
η_{vol}	Compressor volumetric efficiency (–)
ρ	Density of fluid (gas/mixed/liquid) (kg/m^3)

However, in the last decade, the implementation of industry 4.0 concept has enabled different industrial sectors to generate abundant amount of data, which in turn has helped furthering the research in the field of data-driven modeling and control. The following references provide an overview of research activities relevant to the content of this paper.

The survey paper by Gao et al. [13] provides an overview on fault diagnosis, fault-tolerant techniques, and applications with focus on Knowledge-based and Hybrid/active approaches. The paper by Adelekan et al. [14] provides a comprehensive literature review which aims to give up-to-date applications of different AI architectures in refrigeration, heating, ventilation, and air conditioning (RHVAC) systems and to identify the associated limitations and prospects. In [15] a comprehensive overview on the use of different types of ANN to drive autonomous decision-making for optimizing refrigeration system performance is provided. And in [16] the authors report the results of a detailed and systematic review of fault detection and diagnosis methods that have been proposed in the literature relevant for building systems, with many references considering chiller systems, variable air volume systems, and air handling units, among others. Mavromatidis et al. [17] focuses on supermarket performance monitoring by using Artificial Neural Network (ANN) models, which are developed to provide baseline for energy evaluation. The monitoring and diagnosis is carried out on two levels : the first level for system performance evaluation and the second level for fault detection. Mao et al. [18] present a chiller sensor fault detection method that is based on Empirical Mode Decomposition (EMD) threshold denoising and Principal Component Analysis (EMD-TD-PCA). The method is designed to improve fault detection efficiency for temperature sensor bias faults. [19] proposes a combination of deep Recurrent Canonical Correlation, based on LSTM neural network, and K-nearest Neighbor for fault detection and diagnosis to detect drift in different sensors in a chiller unit. Kocyigit [20] proposed a strategy based on Fuzzy Inference System and Artificial Neural Network to estimate the faulty conditions of a vapor compression refrigeration system. Soltani et al. [21] investigate various machine learning algorithms, such as support vector machine, principal component analysis, and Linear discriminant Analysis to detect faults in a vapor compression refrigeration unit. In [22] the authors developed a convolutional neural network-based fault detection method for vaccine refrigerators using data sets synthetically generated by thermodynamic modeling. Du et al. [23] present a data-driven method for sensor fault detection in refrigeration and air conditioning systems. The method is based on subtractive clustering to classify and recognize the various operation conditions adaptively and then uses two statistics to evaluate the measurements reliability.

In this paper, we investigate a plug and play framework for FTC. The framework exploits a black-box modeling approach based on a NN concept. The focus of this work has been on developing a solution that fulfills the following requirements:

- Does not alter the existing control structure as changing the established control systems in industrial applications is a very time consuming task and hence economically infeasible.
- Utilizes a set of sensors/actuators that are commonly used in all supermarket refrigeration systems independent on type and size of them.

The proposed approach in this work for estimating and compensating the bias is inspired by techniques, which are used in active fault diagnosis (AFD) research area. AFD becomes relevant in situations when a fault cannot be monitored due to lack of sufficient information, for instance, a fault can be masked due to certain operational conditions. The idea is then to inject an auxiliary input signal into the system in order to improve the detection quality. Two major directions in this area have been pursued by researchers: one using model-driven methods [24–26] and the other one using data-driven (stochastic) methods [27]. Punčochář and Škach [28] provides a comprehensive overview on this area. Sekunda et al. [29] proposes a model based method for closed-loop active fault diagnosis based on statistical detectors is given using dual Youla–Jabr–Bongiorno–Kucera parameters. An interesting approach in Yan et al. [30] proposes a data-driven framework for trajectory tracking control based on constrained reinforcement learning algorithms and active fault diagnosis.

It should be noted that almost all AFD methods proposed in the literature address faults that can occur *within* the control loop. The unique challenge in this work is that the fault, i.e., bias, on the sensor readings does not directly affect the gas cooler control loops. Instead, it negatively impacts the calculated optimal *set-points* for these control loops.

The proposed FTC method in this paper uses a data-driven AFD approach. This approach involves training and using a feed-forward neural network to continuously estimate the actual bias in ambient temperature readings. The detected bias is then compensated by the proposed control strategy. The contributions of this paper are the followings:

- Ambient temperature sensor bias, induced directly or indirectly due to exposure to sun during the day operation, is modeled and then validated against real field data measurements whilst using the information about the local conditions.

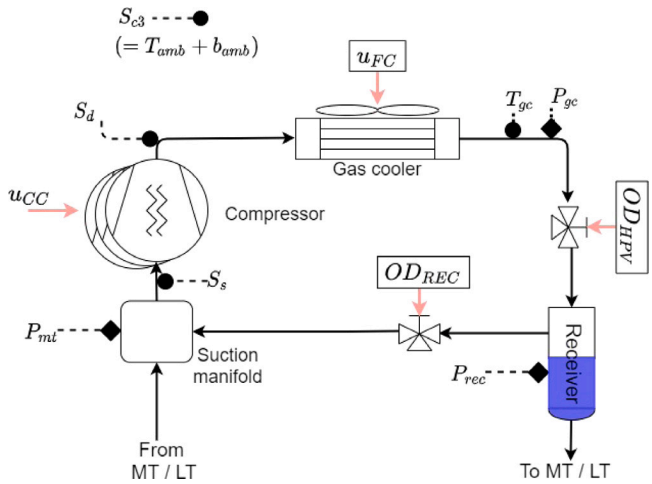

Fig. 1. CO_2 refrigeration cycle - High pressure side.

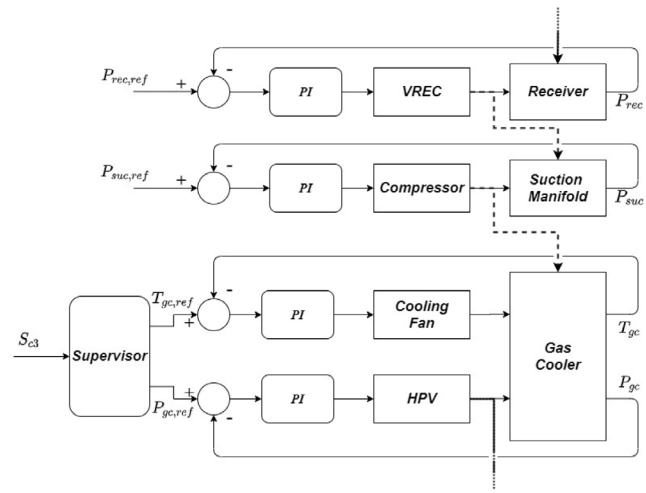

Fig. 2. Distributed PI control architecture of a supermarket refrigeration system with highlighted dynamic coupling between different units.

- An innovative FTC strategy that consists of the following steps:
  - A perturbation signal is added to the ambient temperature sensor measurements during the night operation, where there is no solar impact on the sensor. This will simulate conditions of bias under controlled circumstances.
  - The registered data is then utilized to train a feed forward Neural Network to capture the impact of the imposed bias on the high pressure side of the refrigeration system i.e. the compressor, the gas cooler, and the receiver.
  - A novel control loop architecture, which employs the trained neural network to estimate the sun induced bias through the day operation, is introduced. The control loop will continuously compensate the bias by estimating a residual signal, which is defined as the deviation between the actual ambient temperature and the latest predicted ambient temperature. The predicted ambient temperature is calculated from the *biased* ambient temperature sensor measurements by iteratively compensating the estimated residual signal. The predicted ambient temperature value is then used to generate operational set-points that are in close vicinity of their optimal set-points.

For the test and verification of the proposed strategy a supermarket simulation model, which is built and verified against experimental field data, is used.

The remainder of this paper is organized as follows. Section 2 provides description of the most relevant parts of the considered supermarket refrigeration system. Furthermore, the impact of the bias on the ambient air temperature measurement will be explained. A detailed approach for modeling the bias is then proposed in Section 3. In Section 4 the FTC strategy is presented. The proposed concept is then tested using both real data as well as Monte-Carlo simulations and results are presented in Section 5. The conditions for online employment of the presented method in industrial applications is then presented in Section 6. Concluding remarks and final thoughts are provided in Section 7.

2. System description

The considered system is the high pressure side of a simple CO2 booster supermarket refrigeration system, illustrated in Fig. 1. Most commonly used sensors in such systems are depicted in the figure and listed in Table 1. The considered units are: compressor unit, gas cooler, receiver and the suction manifold.

Table 1
Commonly available measured process variables.

Quantity	Sensor symbol	Unit
Ambient Temperature	S_{c3}	K
Gas Cooler Pressure	P_{gc}	Bar
Receiver Pressure	P_{rec}	Bar
Suction Manifold Pressure	P_{mt}	Bar
Compressor Intake (Suction) Temperature	S_s	K
Compressor Discharge Temperature	S_d	K

Fig. 2 shows the main control loops controlling the high pressure side of the system. The control structure of the system is arranged in four independent single input single output PI control loops: bypass valve $VREC$ controls the receiver pressure P_{rec}, Compressor unit controls the suction pressure P_{mt}, High pressure valve HPV, and Cooling Fans control the gas cooler's pressure P_{gc} and outlet temperature T_{gc}, respectively.

Due to the dynamical couplings between different units, the effect of a fault in a SISO control structure can propagate to other units. This implies that the measurements across the considered parts can provide information about the states of each other and, therefore, should be taken into account for bias estimation. A short description of the main unit's functionality is given below:

2.1. Gas cooler

The gas cooler is modeled as a heat exchanger that is split into a two-phase region and a sub-cooled region, as illustrated in Fig. 3. Mass and energy equations are used to calculate the heat and mass transfer. Coolprop library [31] is used to calculate the states of the system, such as the enthalpy at the outlet of the gas cooler as a function of the outlet temperature T_{gc} and the pressure P_{gc}. The enthalpy at the inlet of the gas cooler is equal to the enthalpy at compressor outlet (dischange).

2.2. Receiver

Receiver dynamics is described using mass and energy balance. Detailed description of the dynamics is provided in [32] and hence will not be mentioned here. Refrigerant mass flow into and out of the receiver are regulated by respective valves (high pressure, bypass, and expansion valves) as it is shown in Fig. 1.

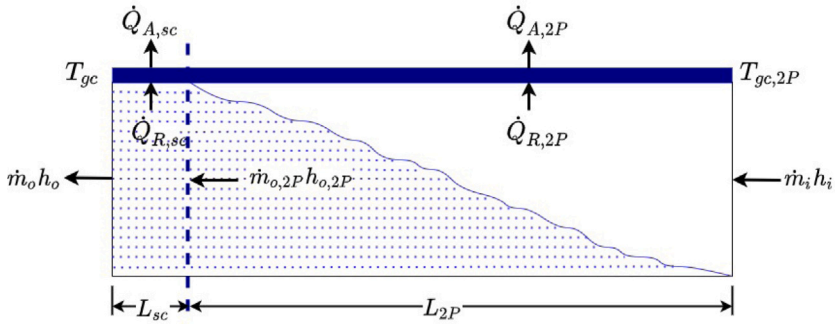

Fig. 3. Energy balance demonstration in a gas cooler during sub-critical operations. Gas cooler is divided in two sections: the sub-cooled (sc) and the 2-phase ($2P$) section. During trans-critical operations, the sub-cooled region will not exists.

2.3. Compressor

The mass flow of the compressor is given by:

$$\dot{m}_{oc} = \eta_{vol} \cdot \dot{V}_{vol} \cdot \rho_c \cdot u_{CC} \qquad [\mathrm{kg\,s^{-1}}] \qquad (1)$$

where ρ_c is the density of CO_2 at the inlet of the compressor, $\dot{V}_{vol}$ is the volumetric flow rate, and η_{vol} is the volumetric efficiency.

State tables are used to calculate entropy, isentropic enthalpy change in the compressor h_{id}, density and temperature of the fluid in the compressor using pressure and enthalpy at the inlet.

Consequently, the compressor work $\dot{W}_{comp}$ (using energy balance method), the discharge enthalpy h_{dis} and the heat loss $\dot{Q}_{heatloss}$ can be then calculated:

$$\dot{W}_{comp} = \frac{\dot{m}_{oc}(h_{id} - h_{in})}{\eta_{is}(1-f)} \qquad [\mathrm{J\,s^{-1}}] \qquad (2)$$

$$h_{dis} = ((1 - \frac{1}{\eta_{is}})h_{in} + \frac{h_{id}}{\eta_{is}})(1-f) \qquad [\mathrm{J\,kg^{-1}}] \qquad (3)$$

$$\dot{Q}_{heatloss} = f.\dot{W}_{comp} \qquad [\mathrm{J\,s^{-1}}] \qquad (4)$$

η_{is} is the compressor isentropic efficiency term, and f is the heat loss coefficient.

2.4. Valves

The generic valve model is given by:

$$\dot{m} = K_v \cdot OD \cdot \sqrt{\Delta P \cdot \rho} \qquad [\mathrm{kg\,s^{-1}}] \qquad (5)$$

ΔP is the pressure difference between the valve inflow and outflow regions. ρ is the density of the inflow fluid and is a function of the pressure at the inlet of the valve. OD represents the valve's opening degree and K_v is the valve constant and its value depends on the type, size and design of the value. For high pressure valve, which controls the gas cooler pressure, we have

$$\Delta P = P_{gc} - P_{rec}$$

For bypass valve, Which controls the pressure in the receiver, the pressure difference is given by

$$\Delta P = P_{rec} - P_{mt}$$

with P_{gc}, P_{rec}, and P_{mt} being the pressure in the gas cooler, receiver, and the suction manifold respectively. For the above mentioned valves the corresponding opening degrees are denoted by OD_{HPV}, and OD_{REC} respectively.

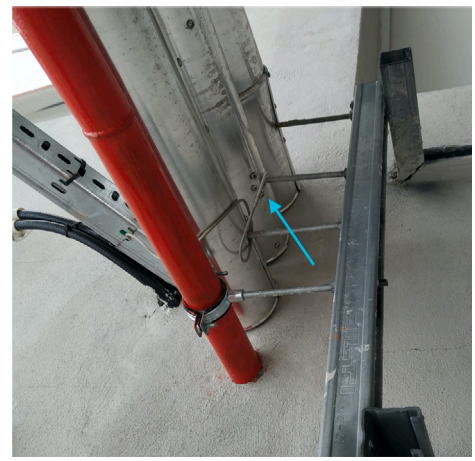

Fig. 4. Temperature probe for Tair External, with blue arrow pointing at probe. Picture used with permission of MultiPack Project.[1]

3. Bias modeling

This section proposes a stochastic model for the bias using available experimental data and realistic scenarios. To the best of the author's knowledge, there is currently no stochastic model available in the literature for characterizing the bias in ambient temperature sensors. In this study, our approach commenced with a rigorous analysis of the available field data, ultimately leading to the identification of possible key components. This model will be later used to generate many biases with similar stochastic behaviors. These synthetically generated biases are instrumental in creating realistic scenarios, which, in turn, serve as a critical component in the validation process of our proposed FTC algorithm. The bias model has parameters to consider different factors such as season, location and the proportion of the day that is in sunlight. Moreover, the model has stochastic parameters to verify the performance of fault identifier under different unforeseen situations.

3.1. Field data logging

The picture in Fig. 4 shows a temperature probe placed by a client to measure the external air temperature [33,34]. This sensor is exposed to the sun as well as being surrounded by piping that is meant to carry hot refrigerant. As a result, both sunlight and the surrounding heat from the pipe can affect the temperature probe.

[1] MultiPACK is a European project funded under the Horizon 2020 Research and Innovation Programme, project number 723137.[35]

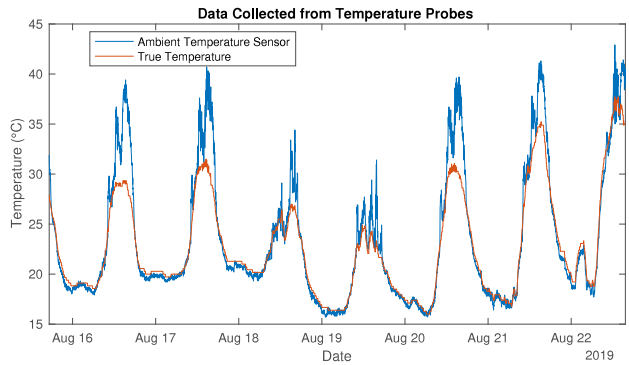

Fig. 5. One week temperature data from the field test.

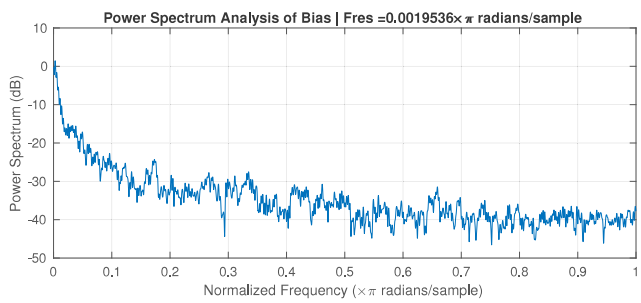

Fig. 6. Power spectrum analysis of the bias.

The client data belongs to an European research project [35] and gathered by a temperature probe of the AK-PC782 A control pack. To measure the bias of the ambient temperature, a separate sensor (from the same type) was placed in a location that was verified by engineers to provide an accurate reading of the true ambient temperature. The bias of this client sensor is selected as a reference for bias generation, as the variation of the bias from one day to another as well as the maximum amplitude of the bias in this case are considerable compared to the bias data available from other cases. Therefore this case can cover what other systems will experience to a high degree. The data of the reference bias is collected during 7 weeks from which one reference week is chosen and is plotted in Fig. 5. Logging begins at August 15 Thursday 17 h15 ± 120 s. The data shows the difference between the Tair External, and the supposed "True ambient temperature" where the sample time is 120 s.

3.2. Pre-processing

The first step is to filter the high frequency fluctuations on the measured ambient temperature as they are not associated with the bias. Using the power spectrum of the noisy bias, plotted in Fig. 6, the cut-off frequency of the first order low-pass filter is selected to be 0.2πrad/sample $= 8.3 \times 10^{-4}$ (Hz). This means that the bias changes slowly in comparison to the sampling time, such that there are at least 10 samples that measure the bias. The filtered bias is shown in Fig. 7.

3.3. The effective factors

According to Fig. 7, the first observation is that during days 1, 2, 5 and 6 the bias peaks in a very consistent fashion. This is due to sunlight as the sun causes the temperature of the sensor to be much warmer than the actual air temperature. The repetitive spikes and dips correspond to a scenario where, as the sun moves through the sky, the piping surrounding the temperature probe provides shade. On days where the sun is blocked (e.g. days 3 and 4), there is still bias, but not to the same

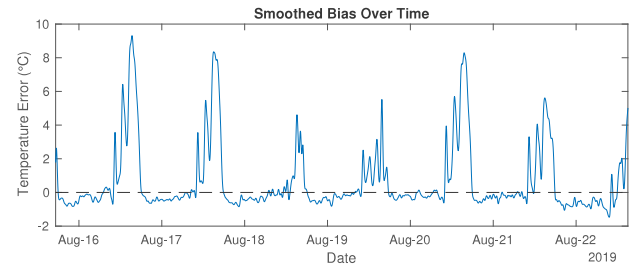

Fig. 7. Filtered bias signal.

degree as when there is sun. Meanwhile the bias that occurs during night time is consistently small, and always in the negative region, further supports the sunlight theory of bias. They never exceeds below −2.5 °C

3.4. Bias generation

The proposed bias model contains all three mentioned components, i.e. the sunlight component (β_s), the cloud associated component (β_c) and the night component (β_n):

$$b(t) = \beta_s(t) + \beta_c(t) + \beta_n(t); \tag{6}$$

To address the need for stochastic behavior of the bias (as it is going to be used for Monte Carlo cross-check), each component has an internal random parameter.

For the sunlight component, we assume that the direct sunlight contributes a Gaussian pulse shape, who's peak occurs in the middle of the daylight hours. This is a reasonable assumption as in a sunny day the amount of sun more or less follows a bell shape. The equation for generating $\beta_s(t)$ is given below:

$$\beta_s(t) = S \cdot d \cdot P\, e^{\left(\frac{-(t-t_0)^2}{2\sigma^2}\right)} \tag{7}$$

where P is the peak value and σ determines the width of the curve. These two parameters are selected according to the season and region. t_0 is a shifting factor used to align the Gaussian pulse's peak to the middle of the day, and d is a deterministic value which takes values "0" or "1" as below:

$$d = \begin{cases} 1 & ; \quad \text{if } t \subseteq \text{daylight} \\ 0 & ; \quad \text{if } t \nsubseteq \text{daylight} \end{cases} \tag{8}$$

Finally $S \in \{0, 1\}$ is a binary random variable using the following Bernoulli distribution function:

$$f_s(s) = \begin{cases} \alpha & ; \quad S = 1 \\ 1 - \alpha & ; \quad S = 0 \end{cases} \tag{9}$$

It should be noted that even though binary values are considered for the parameter d, it does not create an abrupt change in $\beta_s(t)$. The reason is that the exponential term of the bias in Eq. (7), i.e. $exp(-(t - t_0)^2/2\sigma^2)$, exhibits a bell-shaped behavior, with the peak concentration at the midpoint of daylight hours. As one moves away from solar noon, gradually approaching the tails of this bell curve, the value of the exponential term diminishes substantially.

As the other two components of bias, i.e. β_c and β_n, have more variations (see Fig. 7), a different approach is used to generate these components. As it is depicted in Fig. 8, these bias components are the filtered outputs of two random variables which change hourly. For β_c the random variable is m_c and the filter is H_c, while for β_n the random variable and the filter are m_n and H_n, respectively. As β_n is active during the night and β_c during the day, m_n and m_c should be multiplied by

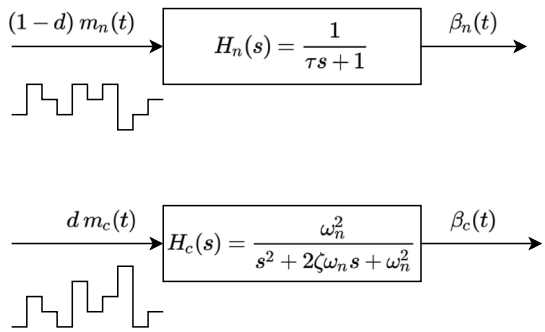

Fig. 8. Generation of $\beta_n(t)$ and $\beta_c(t)$.

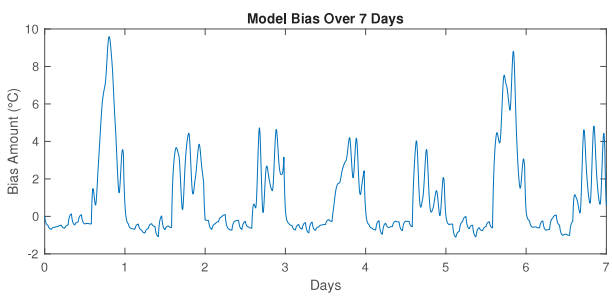

Fig. 9. A sample of the generated bias for a week.

$1-d$ and d, respectively. Regarding the selection of filters, the idea is to use low order filters to avoid over-fitting. However, the variations in β_c is higher than those of β_n (see Fig. 7 where the variations in positive side is due to β_c and those in negative side are due to β_n). Therefore, a second order under-damped filter is used for β_c while a first order filter has been sufficient for β_n. The specifications of the random variables are given below:

$$m_{n_i} \sim N(\mu_n, \sigma_n^2) \quad , \quad m_{c_i} \sim U(0, P_2) \tag{10}$$

The reason for selection of a uniform distribution for m_c and normal distribution for m_n is the behavior of the corresponding bias components in the experimental data.

Finally in order to reconstruct a bias signal with similar stochastic behavior of the experimental data, the parameters of the bias model are selected as follows:

Par.	P	P_2	ζ	ω_n	μ_n	σ_n	τ
Val.	5	5	0.9	$8.7 * 10^{-4}$	−0.5	0.3	1200
unit	°C	°C		rad/sec	°C	°C	sec

Fig. 9 shows the generated bias signal using the proposed model and given parameters. This resulting model quite nicely reproduces what we see in the smoothed bias over time from Fig. 7.

4. Fault-tolerant control concept

To alleviate the impact of biased readings of the ambient temperature sensor problem the following FTC approach is proposed. The ultimate aim is to estimate the unbiased ambient temperature (i.e. $\hat{T}_{amb}$), using two distinct steps. We begin with an initial estimate for $\hat{T}_{amb}$, and the first step involves training a neural network capable of generating a residual signal (denoted as r) that is proportional to the estimation error. In the second step, $\hat{T}_{amb}$ is updated using both the generated residual signal and a dedicated bias compensator. Due to the Plug & Play requirement, the training data for NN is generated online by perturbing the sensor readings during the night operation (where the real bias is minimum) with known artificial bias.

In the sequel, the bias estimation as well as bias compensation process are described in more details.

Table 2
Inputs to neural network.

Neural network input	Symbol	Range	Unit
Artificially biased Ambient Temperature Sensor	S_{c3}	$[0, \ldots, 50]$	°C
Gas Cooler Outlet Temp.	T_{gc}	$[3, \ldots, 53]$	Bar
Compressor Suction Temp.	S_s	$[-10, \ldots, 10]$	°C
Gas Cooler Pressure	P_{gc}	$[0, \ldots, 100]$	Bar
Suction Manifold Pressure	P_{mt}	$[0, \ldots, 100]$	Bar
Receiver Pressure	P_{rec}	$[20, \ldots, 60]$	Bar
High Pressure Valve Opening Degree	OD_{HPV}	$[0, \ldots, 100]$	%
Cooling Fan Capacity	u_{FC}	$[0, \ldots, 1]$	%
Compressor Capacity	u_{CC}	$[0, \ldots, 1]$	%
Receiver Valve Opening Degree	OD_{REC}	$[0, \ldots, 100]$	%

4.1. Bias estimation

Fig. 10 illustrates the NN arrangement during the training phase. To carry out the training in a Plug & Play framework the data need be acquired and manipulated online. The data acquisition is done during night time as the ambient temperature sensor is most trustworthy (i.e. no impact from the sun). By adding a perturbation signal (as an artificial bias) to the night time readings, the behavior of the system can be studied. Even though the day time bias could be relatively large (Fig. 7), the perturbation signal should be kept low not to move the system away from its optimal operating conditions. Therefore, a signal of limited magnitude, denoted $T_{pert} \in [-1, 1]$, is generated and added to the sensor readings. It should be noted that the sensor reading S_{c3} during night operation is considered unbiased and represents the true value of the ambient temperature. So, in this case the artificially biased temperature measurement $\hat{T}_{amb} = S_{c3} + T_{pert}$ is fed to the supervisor. Consequently, the supervisor generates non-optimal setpoints that force the system to operate slightly away from its expected operating conditions. The acquired data from night operations are then saved in a Data buffer and used to train a feed-forward Neural Network. The trained NN provides an estimate of T_{pert} as its output.

4.2. Training

During the training phase the perturbation signal is generated in a module. In practice, this signal is in the form of step signals with uniformly distributed random magnitudes between −1 and 1, each lasting 3000 s. A feed forward NN with two hidden layers, each containing 20 nodes, was chosen. ADAM optimization was used as the learning algorithm. An initial learning rate of 0.01, and bias correction terms $\beta_1 = 0.9$ and $\beta_2 = 0.99$ were selected for the momentum and RMS terms for the performance function, respectively [36].

4.2.1. Inputs and output:

The inputs to the neural network are given in Table 2. These inputs are selected to take into account the causal effect that the system's cross-coupled nature induces, as described in Section 2 and depicted in Fig. 2. The process of input selection was additionally supported by detailed correlation analysis.

The trained neural network's output is the generated perturbation signal during the night operation.

4.2.2. Training data collection:

Neural networks must be trained with labeled data in order to correctly predict an output. One challenge of plug and play is that we want to run this supervised training while the refrigerator is running. While the system is running, we also have to assume there is an unknown bias acting on the temperature sensor. The bias profile, as shown in Fig. 7, is highly positive during the day, and very small during the evening. During the day time, we have to presume no a-prior knowledge of the

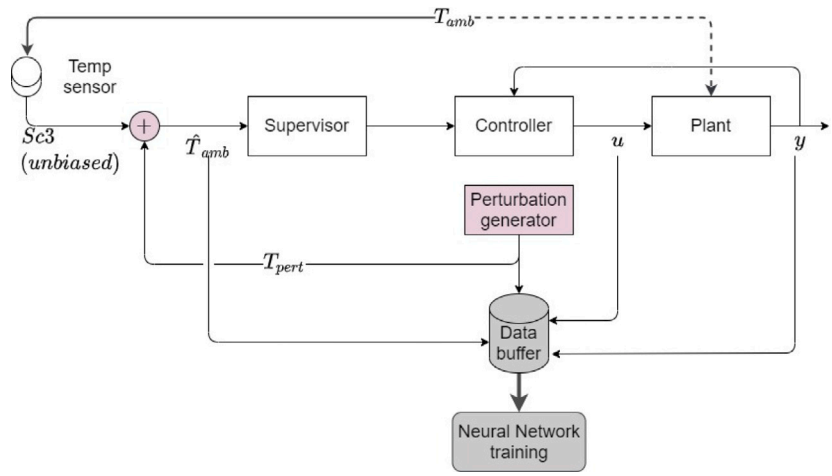

Fig. 10. Neural network arrangement during training phase.

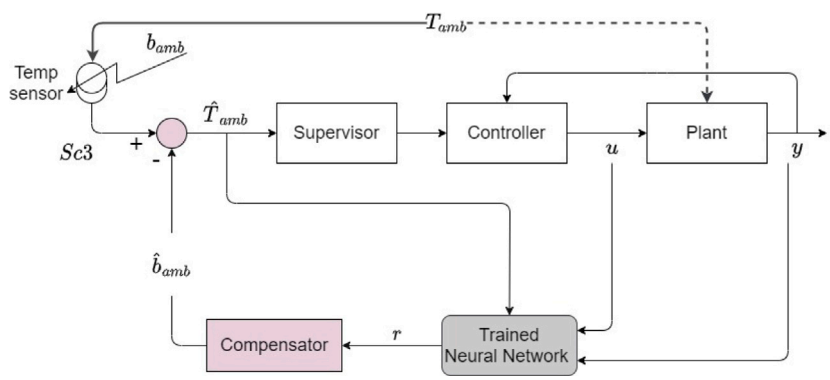

Fig. 11. Bias compensation scheme block diagram.

bias, so we cannot label it, and therefore, it is unusable for training online. The chosen solution, as emphasized in Section 4.1, is to inject artificial bias to the ambient temperature readings during the night time and then train the NN, using the mentioned inputs and output, to predict the bias accurately.

The data buffer determines how much data is used for training, while carrying out any necessary pre-processing. In our case, we use a min max normalization to fit the data to values between −1 and 1. Since memory is a consideration to the practical application of this system, the number of input samples will be finite, and a moving window of data will be used. The data buffer takes a snapshot of all the measurements at intervals of 20 s, and stores 1296. This figure is equivalent to the number of samples during a night time in summer, which is the worst case scenario, as summer nights are also the shortest night. The system begins training once the buffer is full.

4.3. Bias compensation

Fault tolerance objective is achieved through continuous compensation of the bias during the day operation as it is schematically illustrated in Fig. 11.

The inputs to the trained NN are the same as the ones listed in Table 2 except the first one: instead of using the biased measurements represented by S_{c3} we use $\hat{T}_{amb}$ that is calculated by:

$$\hat{T}_{amb} = S_{c3} - \hat{b}_{amb} \tag{11}$$

where $\hat{b}_{amb}$ is the output of Compensator block and is the estimated value of the bias at the current state. There are two points about the bias compensation scheme given in Fig. 9 that need to be paid attention. (1) When the loop is closed, the output of neural network (i.e. the residual signal $r(t)$) is not the estimated bias. This signal is the difference between T_{amb} and its estimation, i.e. $\hat{T}_{amb}$. (2) As it will be proved later, the compensator has integral behavior. Therefore, the residual signal in the closed loop case is proportional to the derivative of bias. This means that the residual signal, even in the presence of high magnitude bias, remains limited. Hence the neural network will work for the day time high magnitude bias, even though it is trained using low magnitude perturbation signal. This is important as NNs do not generally perform well when extrapolating.

The considerations taken for the design of the function in the Compensator are provided below.

4.3.1. Compensator design

As Fig. 12 shows, the neural network is trained to generate a residual signal which is the difference between T_{amb} and $\hat{T}_{amb}$, i.e.

$$r = NN(u, y, \hat{T}_{amb}) \simeq \hat{T}_{amb} - T_{amb} \tag{12}$$

It should be noticed that the bias b_{amb} is the difference between S_{C3} and T_{amb}, not $\hat{T}_{amb}$ and T_{amb}. Therefore, as mentioned, the trained Neural Network estimates $\hat{T}_{amb} - T_{amb}$ not the actual bias.

As indicated in the figure, the structure for finding $\hat{T}_{amb}$ (i.e. estimation of T_{amb}) is similar to a control loop. In this control loop a controller block is considered to generate $\hat{b}_{amb}$ from r. The term e inside the NN block represents the possible error of the NN (as r is not exactly equal to $\hat{T}_{amb} - T_{amb}$) i.e.

$$\hat{T}_{amb} - T_{amb} + e = r$$

where e is considered to be a stochastic variable with mean value close to zero.

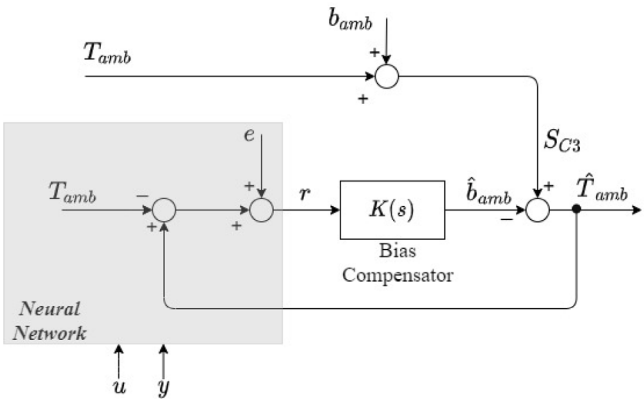

Fig. 12. Bias compensator.

The block diagram has three inputs: T_{amb}, b_{amb} and e, and one output $\hat{T}_{amb}$. Simplifying the block diagram yields:

$$\hat{T}_{amb}(s) = \frac{K(s)}{1+K(s)}T_{amb}(s) + \frac{1}{1+K(s)}T_{amb}(s) - \frac{K(s)}{1+K(s)}E(s) + \frac{1}{1+K(s)}B_{amb}(s)$$

where $E(s)$ and $B_{amb}(s)$ are the Laplace transform of $e(t)$ and $b_{amb}(t)$, respectively. Further simplification of equation gives:

$$\hat{T}_{amb}(s) = T_{amb}(s) - G_e(s)E(s) + G_b(s)B_{amb}(s); \quad (13)$$
$$G_e(s) = \frac{K(s)}{1+K(s)}, \; G_b(s) = \frac{1}{1+K(s)}$$

which means that regardless of the design of $K(s)$, $T_{amb}(s)$ appears in Eq. (13) without any coefficient. Therefore, the goal of design of $K(s)$ would be to attenuate $G_b(s)$ and $G_e(s)$ as none of the terms associated with $b_{amb}(t)$ and $e(t)$ are desired. It should be noticed that $G_b(s)$ and $G_e(s)$ are complementary functions, i.e. $G_b(s) = 1 - G_e(s)$, therefore attenuating both of these functions at the same time for all frequencies is impossible. A reasonable design for $K(s)$ would be to attenuate the effect of signals $b_{amb}(t)$ and $e(t)$ in the frequencies they have their main spectrum. By nature, $b_{amb}(t)$ has its main power in low frequencies while $e(t)$ is more powerful in high frequencies. This means that $G_e(s)$ and $G_b(s)$ should be low-pass filter and high-pass filter, respectively. In this study, $K(s)$ is designed as follows:

$$K(s) = \frac{k}{s}; \qquad G_e(s) = \frac{k}{s+k}, \; G_b(s) = \frac{s}{s+k} \quad (14)$$

where k changes the bandwidth of filters and should be selected according to the spectrum of bias and error signals. Using this design, very low frequency biases (including DC bias) have no effect on $\hat{T}$. Increasing k, can remove the effect of higher frequency biasses, however it let the high frequency error to pass as well. Therefore, selection of k is basically a trade-off between attenuation of bias and modeling error. The resulting estimated temperature during the daily operation is then calculated as:

$$\hat{T}_{amb} = S_{c3} - k\int_{t_0}^{t} r(\tau)d\tau \quad (15)$$

Regarding the stability of the control algorithm presented in Fig. 12, it is important to notice that by substituting K(s) with k/s, the control loop in this figure is internally stable. As a consequence, in accordance with the bounded input bounded output stability criterion, all output signals remain bounded, provided that the inputs remain bounded. In Fig. 12, we depict three inputs: "T_{amb}", "b_{amb}" and "e". It is entirely realistic to assume that "T_{amb}" and "b_{amb}" are bounded, given that they are physical signals. Regarding the input "e", it represents the error of neural network in estimating "$\hat{T}_{amb} - T_{amb}$". To ensure the boundedness of "e" and, consequently, all signals in Fig. 12, we have considered the imposition of a limit on the output of the integrator, an aspect we have detailed in our Discussion section. Furthermore, we do acknowledge the critical role of "e" in the performance of the bias compensator, emphasizing its dependence on the trained neural network's efficacy, as highlighted in the Results section.

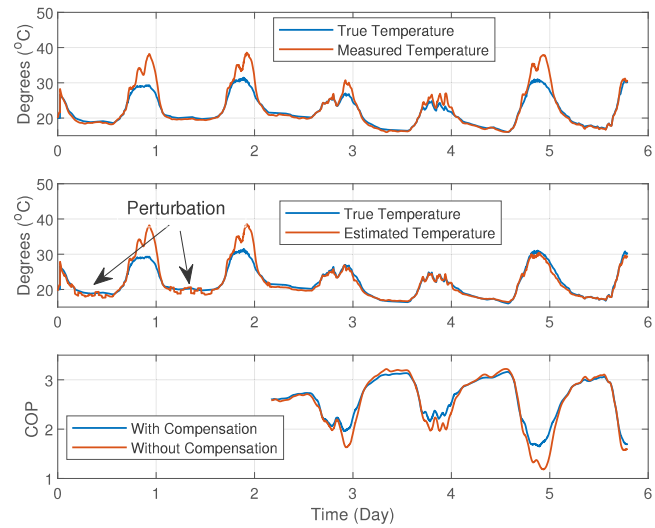

Fig. 13. Compensation of the bias (real data) and the effect of that on COP - top: True temp. measurements vs biased measurements, middle: True temp. vs. the estimated temp after 2 nights training, bottom: Calculated COP for biased vs bias-compensated scenario. (For interpretation of the references to color in this figure legend, the reader is referred to the web version of this article.)

5. Results

The first case to validate the proposed bias estimation–compensation approach is to use the real life data of a biased temperature (given earlier in Fig. 7). To train the NN the data from the first two nights are perturbed (middle plot of Fig. 13). The trained NN is then employed in the remaining period to estimate and compensate the biased measurement. In the lower plot of (Fig. 13) the calculated Coefficient-Of-Performance, COP, for uncompensated (red) and compensated (blue) sensor measurements are depicted. COP is the ratio of the delivered cooling capacity by the evaporators to the used electrical power by the compressors and the fans, i.e. $COP = \dot{W}_{evap}/(\dot{W}_{comp} + \dot{W}_{FC})$. The higher the COP is, the better the system is performing, hence less power is being consumed. As it can be observed, the power consumption during the day time is clearly improved due the compensation of bias. Calculations show that the energy saving in this case is 3.03% (the extra energy consumption due to bias has been 4.07%). To further verify the proposed solution in many different scenarios, a Monte-Carlo test consisting of 100 simulations, was conducted. For each run, the seed for the night time and day time bias was varied and other random parameters were taken from their given distributions. For all cases an identical load profile on the evaporators was applied. To evaluate the usefulness of the developed solution, the total electrical energy, used by the compressor and the gas cooler fans, was employed as a measure to describe the energy saving. Two cases were considered: in the first case we calculate the energy saving when we use the unbiased sensor instead of the biased one, i.e.:

$$Maximum\ Energy\ saving\ (\%) = \frac{W_{biased} - W_{Unbiased}}{W_{Unbiased}} * 100 \quad (16)$$

In the second case the recovered energy saving is calculated when the biased measurement are replaced with the proposed bias compensation algorithm:

$$Recovered\ Energy\ saving\ (\%) = \frac{W_{biased} - W_{bias,compensated}}{W_{Unbiased}} * 100 \quad (17)$$

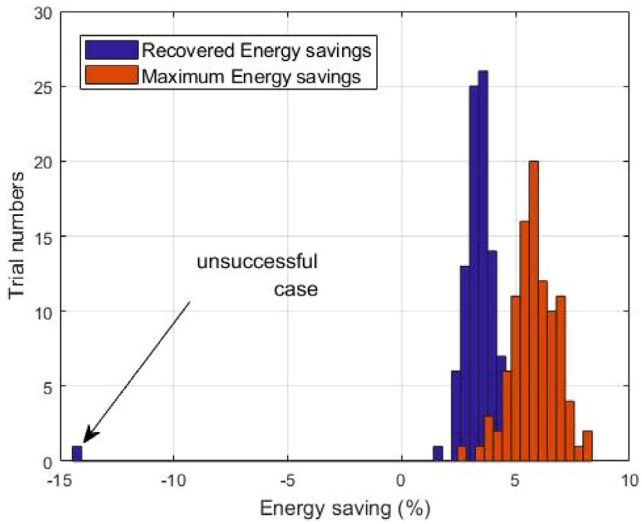

Fig. 14. Distribution of energy savings in percentage for 100 Monte-Carlo simulated scenarios.

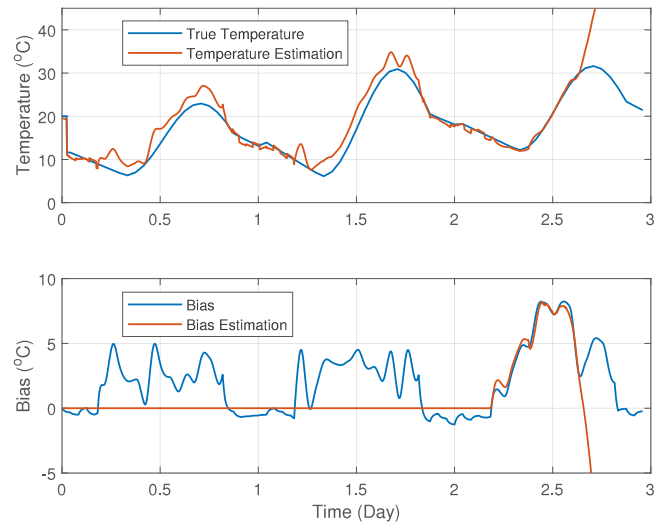

Fig. 15. The unsuccessful bias compensation scenario. Top: the true temp. vs. the estimated temp, bottom: True Bias vs. the estimated bias.

Here the total electrical energy for each run is given by:

$$W = W_{comp} + W_{FC}.$$

Power consumption by the fan is dictated by the following equation:

$$\dot{W}_{FC} = K_{FC}(100u_{FC})^3 \tag{18}$$

with $K_{FC} = 0.053$. The result of the Monte-Carlo test is depicted in Fig. 14 where energy savings for both cases are depicted. The maximum energy savings are obtained when the biased sensor measurements are replaced with a completely unbiased measurements while the recovered energy savings are achieved by using the compensated sensor measurements. The results indicate that we obtain, in average, 3% energy savings through implementation of the proposed solution. This is considered to be very interesting and positive result. Using following calculation:

$$eff = \frac{1}{99}\sum_i \frac{W^i_{biased} - W^i_{bias,compensated}}{W^i_{biased} - W^i_{Unbiased}} = 0.607$$

with eff indicating the efficiency and i indicating the successful trial number, the calculations also show that the proposed algorithm has been able to recover 60.7% of the maximum possible energy savings.

The figure furthermore reveals that in one test the trained NN did not perform satisfactorily. Fig. 15 presents the test results for this unsuccessful test.

The top plot in this figure shows that the estimated temperature diverges from the true value after half a day of operation. The bottom plot shows the corresponding estimated bias, which indicates that the trained NN has failed to provide the correct residual. The wrongly estimated temperature results in an unrealistically high pressure reference calculated by supervisor which leads the compressor unit to operate at maximum capacity.

6. Discussions

The Monte-Carlo simulations revealed that 99% of the online trained NNs with relatively limited number of data from 2 nights of operation performed satisfactorily. Only in 1 case the trained neural network failed to generate the correct residuals. To remove the possibility of these kinds of failures additional effort are needed to improve the neural network's performance by, for instance, choosing advanced parameter initialization or optimizing the learning algorithms, or using additional data. For this specific case, however, the problem can be easily handled. We know that the estimated bias does not become negative when the sensor is exposed to sun radiation during the day operation. On the other hand, we also know that there is an upper limit for deviation between the sensor measurement and the real ambient temperature. So, a fault indication flag will be generated in cases where

$$\hat{b}_{amb} \leq -0.5 \qquad OR \qquad \hat{b}_{amb} \geq 10.$$

The lower limit is set to -0.5 to take estimation uncertainties into consideration. In such cases the supervisor will ignore the bias compensation and directly receive the sensor measurement signals, i.e. S_{C3}. Upon receiving the fault flag, the model parameters will be reinitialized followed by a new training process.

In general, as long as we are concerned with implementing the solution in industrial units such as refrigeration systems, where food safety is the dominating factor, then we have to either ensure that the solution is robust (never fails), or have a contingency control plan ready in case the trained model fails to perform correctly.

Robustness can be achieved by combining digital twin and extensive Monte Carlo Simulations, where different possible scenarios can be generated and the solution can be tested multiple times. This is a necessity in order to gain confidence in a solution based on a black-box model.

In some cases, the information about the system's dynamic behavior can provide means for verifying the validity of the proposed solution during the operation. Deep insight on the systems dynamics can be used to develop detection possibilities as well as contingency plan for the cases where the trained model does not perform correctly, as it is shown for the discussed case.

The primary reason for selecting a feed-forward neural network was due to the system dynamics being taken into account. The bias in the ambient temperature sensor develops slowly, which allows the high-pressure side of the refrigeration system, with its much faster dynamics, to quickly adapt to changes in bias dynamics. Consequently, when considering the relationship between bias values and other system measurements, the transient response of the system dynamics can be disregarded. Therefore, this relationship can be represented by a static (nonlinear) map, justifying the use of a standard feed-forward neural network in this study. In future work, the authors plan to explore the use of machine learning-based regression analysis tools to incorporate the transient response that were previously disregarded in the bias estimation process. Specifically, long-short-term memory (LSTM) models, which have demonstrated excellent prediction performance, will be of primary interest.

7. Conclusion

This paper proposes a data-driven FTC method to deal with biased sensor measurements of ambient temperature that are caused by the exposure to sun radiation during day operation in supermarket refrigeration systems. A detailed bias model was constructed through investigation of the field data and was used to perform Monte Carlo cross-validation of the proposed FTC algorithm. The proposed fault-tolerant control strategy uses a trained neural network and a control loop structure to cancel the low frequency bias on the sensor measurement and the high frequency model mismatch.

The proposed solution underwent testing against both real data and Monte-Carlo simulations. At each simulation test, different temperature and bias profiles were combined. Average energy saving for these tests showed to be 3%, which is considered to be significant. More importantly, it was shown that the proposed method was able to recover more than 60% of the maximum possible energy savings. At one case the trained NN failed to perform satisfactorily. However, using system knowledge it is possible to detect the malfunction and switch to the real (albeit being biased) measurement data to continue the operation. The proposed FTC method, which was designed to be employed in a Plug & Play framework, satisfied this requirement. Based on the obtained results, the conditions for employing black-box models in industrial systems under safety requirements, were further discussed.

Declaration of competing interest

The authors declare that they have no known competing financial interests or personal relationships that could have appeared to influence the work reported in this paper.

Acknowledgments

A sincere thank you to Danfoss for providing the simulink model of the supermarket refrigeration system. The work is supported by the Danish EUPD funded *Digital twins for large-scale heat pump and refrigeration systems*' project.

References

[1] Jin X, Du Z. Fault tolerant control of outdoor air and AHU supply air temperature in VAV air conditioning systems using PCA method. Appl Therm Eng 2006;26(11–12):1226–37. http://dx.doi.org/10.1016/j.applthermaleng.2005.10.039.

[2] Ma Z, Wang S. Fault-tolerant supervisory control of building condenser cooling water systems for energy efficiency. HVAC R Res 2012;18(1–2):126–46. http://dx.doi.org/10.1080/10789669.2011.568320.

[3] Reppa V, Papadopoulos P, Polycarpou MM, Panayiotou CG. A distributed architecture for HVAC sensor fault detection and isolation. IEEE Trans Control Syst Technol 2015;23(4):1323–37. http://dx.doi.org/10.1109/TCST.2014.2363629.

[4] Padilla M, Choinière D, Candanedo JA. A model-based strategy for self-correction of sensor faults in variable air volume air handling units. Sci Technol Built Environ 2015;21(7):1018–32. http://dx.doi.org/10.1080/23744731.2015.1025682.

[5] Wang S, Xing J, Jiang Z, Dai Y. A novel sensors fault detection and self-correction method for HVAC systems using decentralized swarm intelligence algorithm. Int J Refrig 2019;106:54–65. http://dx.doi.org/10.1016/j.ijrefrig.2019.06.007.

[6] Harmouche J. Statistical incipient fault detection and diagnosis with Kullback-Leibler divergence : From theory to applications (Ph.D. thesis), 2015, p. 159, URL: https://tel.archives-ouvertes.fr/tel-01142209.

[7] Hongquan J, Xiao H, Donghua Z. Diagnosis of sensor precision degradation using Kullback-Leibler divergence. Can J Chem Eng 2017;96:434–43. http://dx.doi.org/10.1002/cjce.22916.

[8] Gautam S, Tamboli PK, Patankar VH, Roy K, Duttagupta SP. Sensors incipient fault detection and isolation using Kalman filter and Kullback–Leibler divergence. IEEE Trans Nucl Sci 2019;66(5):782–94.

[9] Blanke M, Kinnaert M, Lunze J, Staroswiecki M. Diagnosis and fault-tolerant control. 3rd ed.. Berlin, Heidelberg: Springer; 2016, http://dx.doi.org/10.1007/978-3-662-47943-8.

[10] Noura H, Didier T, Ponsart J, Chamseddine A. Fault-tolerant control systems - Design and practical applications. London: Springer Verlag; 2009, http://dx.doi.org/10.1007/978-1-84882-653-3.

[11] Ding SX. Data-driven design of fault diagnosis and fault-tolerant control systems. London: Springer-Verlag London; 2014, http://dx.doi.org/10.1007/978-1-4471-6410-4.

[12] Xiong J, Chang X-H, Park JH, Li Z-M. Nonfragile fault-tolerant control of suspension systems subject to input quantization and actuator fault. Internat J Robust Nonlinear Control 2020;1–24. http://dx.doi.org/10.1002/rnc.5135.

[13] Gao Z, Cecati C, Ding SX. A survey of fault diagnosis and fault-tolerant techniques—Part II: Fault diagnosis with knowledge-based and hybrid/active approaches. IEEE Trans Ind Electron 2015;62:3768–74. http://dx.doi.org/10.1109/TIE.2015.2419013.

[14] Adelekan D, Ohunakin O, Paul B. Artificial intelligence models for refrigeration, air conditioning and heat pump systems. Energy Rep 2022;8:8451–66. http://dx.doi.org/10.1016/j.egyr.2022.06.062.

[15] Pérez-Gomariz M, López-Gómez A, Cerdán-Cartagena F. Artificial neural networks as artificial intelligence technique for energy saving in refrigeration systems — A review. Clean Technol 2018;5:116–36. http://dx.doi.org/10.3390/cleantechnol5010007.

[16] Melgaard SP, Andersen KH, Marszal-Pomianowska A, Jensen RL, Heiselberg PK. Fault detection and diagnosis encyclopedia for building systems: A systematic review. Energies 2022;15:1–50. http://dx.doi.org/10.3390/en15124366.

[17] Mavromatidis G, Acha S, Shah N. Diagnostic tools of energy performance for supermarkets using artificial neural network algorithms. Energy Build 2013;62:304–14. http://dx.doi.org/10.1016/j.enbuild.2013.03.020.

[18] Mao Q, Fang X, Hu Y, Li G. Chiller sensor fault detection based on empirical mode decomposition threshold denoising and principal component analysis. Appl Therm Eng 2013;62:21–30. http://dx.doi.org/10.1016/j.applthermaleng.2018.07.104.

[19] Gao L, Li D, Gao Y. Sensor drift fault diagnosis for chiller system using deep recurrent canonical correlation analysis and k-nearest neighbor classifier. ISA Trans 2021;122:232–46. http://dx.doi.org/10.1016/j.ijrefrig.2019.06.007.

[20] Kocyigit N. Fault and sensor error diagnostic strategies for a vapor compression refrigeration system by using fuzzy inference systems and artificial neural network. Int J Refrig 2015;50:69–79. http://dx.doi.org/10.1016/j.ijrefrig.2014.10.017.

[21] Soltani Z, Sørensen KK, Leth J, Bendtsen JD. Fault detection and diagnosis in refrigeration systems using machine learning algorithms. Int J Refrig 2022;144:34–45. http://dx.doi.org/10.1016/j.ijrefrig.2022.08.008.

[22] Abhiraman B, Fotis R, Eskin L, Rubin H. Fault detection for vaccine refrigeration via convolutional neural networks trained on simulated datasets. Int J Refrig 2023;149:274–85. http://dx.doi.org/10.1016/j.ijrefrig.2022.12.019.

[23] Du Z, Chen L, Jin X. Data-driven based reliability evaluation for measurements of sensors in a vapor compression system. Energy 2017;122:237–48. http://dx.doi.org/10.1016/j.energy.2017.01.055.

[24] Nikoukhah R, Campbell SL, Drake KJ. An active approach for detection of incipient faults. Internat J Systems Sci 2010;2(41):241–57. http://dx.doi.org/10.1080/00207720903045817.

[25] Niemann HH. A setup for active fault diagnosis. IEEE Trans Automat Control 2006;51(9):1572–8. http://dx.doi.org/10.1109/TAC.2006.878724.

[26] Jia F, Cao O, Lyu G, He X. A novel framework of cooperative design: Bringing active fault diagnosis into fault-tolerant control. IEEE Trans Cybern 2023;53:3301–7. http://dx.doi.org/10.1109/TCYB.2022.3176538.

[27] Poulsen NK, Niemann HH. Active fault diagnosis based on stochastic tests. Int J Appl Math Comput Sci 2008;18(4):487–96. http://dx.doi.org/10.2478/v10006-008-0043-6.

[28] Punčochář I, Škach J. A survey of active fault diagnosis methods. IFAC PaperOnLine 2018;51–24:1091–8. http://dx.doi.org/10.1016/j.ifacol.2018.09.726.

[29] Sekunda AK, Niemann H, Poulsen NK. Detector design for active fault diagnosis in closed-loop systems. Internat J Adapt Control Signal Process 2023;32:647–64. http://dx.doi.org/10.1002/acs.2858.

[30] Yan Z, Xu F, Tan J, Liu H, Liang B. Reinforcement learning-based integrated active fault diagnosis and tracking control. ISA Trans 2022;132:364–76. http://dx.doi.org/10.1016/j.ijrefrig.2019.06.007.

[31] Bell IH, Wronski J, Quoilin S, Lemort V. Pure and Pseudo-pure fluid thermophysical property evaluation and the open-source thermophysical property library CoolProp. Ind Eng Chem Res 2014;53(6):2498–508. http://dx.doi.org/10.1021/ie4033999, URL: http://pubs.acs.org/doi/abs/10.1021/ie4033999.

[32] Andreasen G, Izadi-Zamanabadi R, Stoustrup J. Virtual refrigerant charge sensor for booster refrigeration systems. Int J Refrig 2021;122:59–68. http://dx.doi.org/10.1016/j.ijrefrig.2020.11.008.

[33] Khorshidi V, Kriezi EE, Schlemminger C, Hafner A, Söylemez E. Performance of integrated r744-packs part 1 - compressor mass flow estimation based on data-driven models using analytical methods and actual field measurements. In: Compressors 2021 - 10th international conference on compressors and coolants. 2021, http://dx.doi.org/10.18462/iir.compr.2021.0390.

[34] Khorshidi V, Kriezi EE, Schlemminger C, Hafner A, Söylemez E. Performance of integrated r744 packs part 2 - ejectors performance, a comparison of data-driven model from onsite measurements with RoM model predictions. In: Compressors 2021 - 10th international conference on compressors and coolants. 2021, http://dx.doi.org/10.18462/iir.compr.2021.0401.

[35] NTNU, SINTEF, CNR, DANFOSS, ENEX, RACE, SONAE. MultiPACK - European research project - ID 723137, URL: https://www.ntnu.edu/multipack.

[36] Kingma D, Ba JL. Adam: A method for stochastic optimization. In: Conference on learning representations. 2015, arXiv: 1412.6980. [Online]. Available: https://Arxiv.Org/Abs/1412.6980v9.