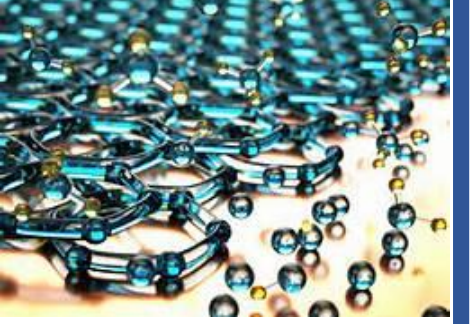

Materials Science

Lecture 6

Lebanese University - Faculty of Engineering – Branch 3

Fall 2022

Dr. Ali HARKOUS

Contents

Lecture 6:

Chap3: Crystalline Structure — Perfection

3.1. Crystal Structures Fundamentals

3.2. Metallic Structures

3.3. Crystal Systems, Positions, Directions, and Planes

3.4. Linear and planar densities

3.5. Close-packed crystal structures

3.2. Metallic Structures

The Hexagonal Close-Packed Crystal Structure (HCP)

- Not all metals have unit cells with cubic symmetry; the final common metallic crystal structure to be discussed has a unit cell that is **hexagonal**.
- Figure (**a**) shows a **reduced-sphere unit cell** for this structure, which is termed hexagonal close-packed (**HCP**); an assemblage of several HCP unit cells is presented in Figure (b).

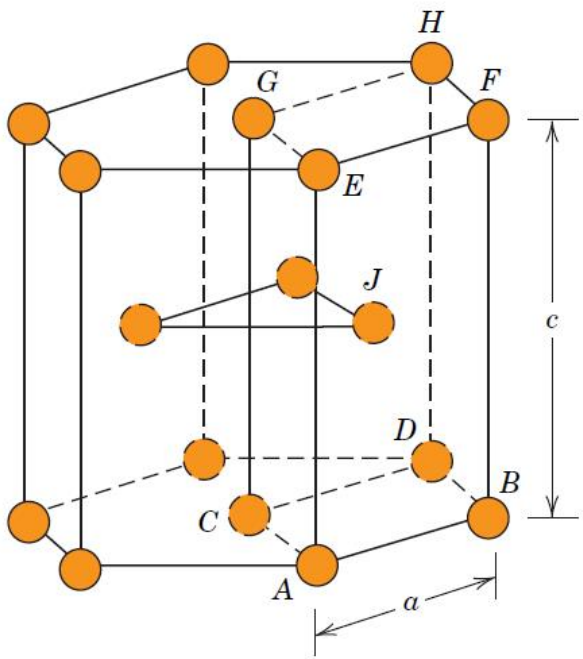

(a)

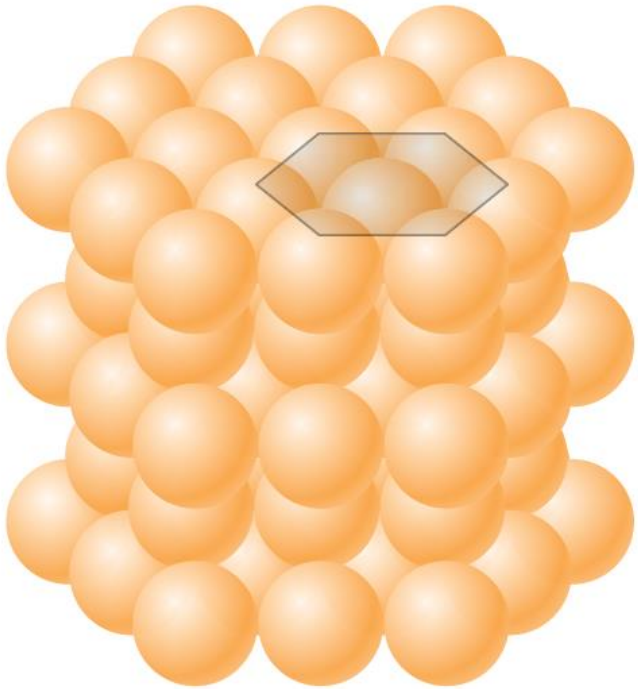

(b)

3.2. Metallic Structures

The Hexagonal Close-Packed Crystal Structure (HCP)

- The **top and bottom** faces of the unit cell consist of **six atoms** that form regular **hexagons** and **surround** a **single atom** in the **center**.

- **Another plane** that provides **three additional atoms** to the unit cell is situated **between the top and bottom** planes. The atoms in this midplane have as nearest neighbors atoms in both of the adjacent two planes.

- If **a** and **c** represent, respectively, the **short** and **long** unit cell **dimensions**, the **c/a ratio** should be **1.633;**

- however, **for some HCP metals**, this ratio **deviates** from the **ideal value**.

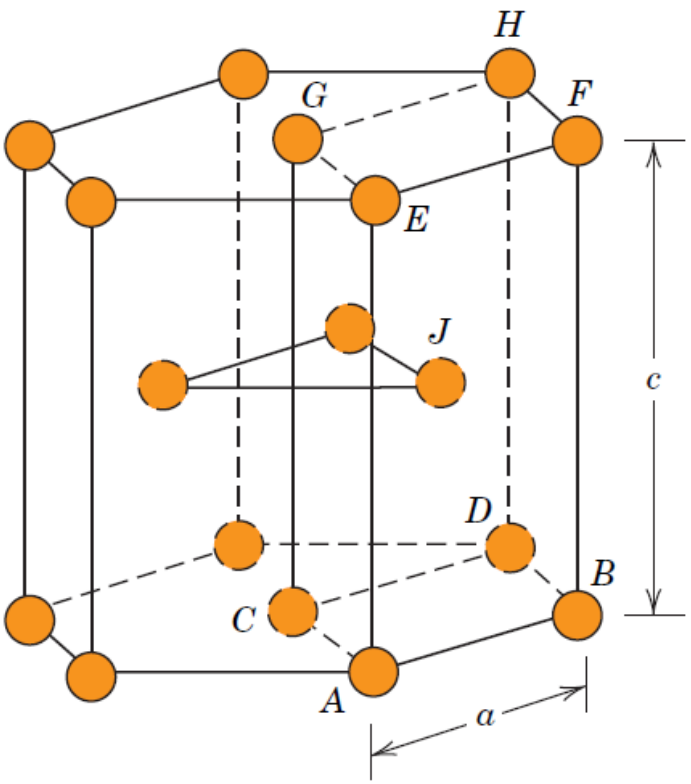

3.2. Metallic Structures

The Hexagonal Close-Packed Crystal Structure (HCP)

- In order to compute the **number of atoms** per unit cell for the **HCP** crystal structure, the **equation is modified** to read as follows:

$$N = N_i + \frac{N_f}{2} + \frac{N_c}{6}$$

- That is, **one-sixth of each corner atom** is assigned to a unit cell (instead of 8 as with the cubic structure).

- Because for HCP there are **6 corner atoms** in each of the top and bottom faces (for a total of 12 corner atoms), **2 face center atoms** (one from each of the top and bottom faces), and **3 midplane interior atoms**, thus, 6 atoms are assigned to each unit cell.

$$N = 3 + \frac{2}{2} + \frac{12}{6} = 6$$

3.2. Metallic Structures

The Hexagonal Close-Packed Crystal Structure (HCP)

- The **coordination number** and the **atomic packing factor** for the **HCP** crystal structure are the **same** as for **FCC**: **12** and **0.74**, respectively.
- The HCP metals include **cadmium**, **magnesium**, **titanium**, and **zinc**.

3.2. Metallic Structures

- Atomic Radii and Crystal Structures for some Metals:

Metal	*Crystal Structure*[a]	*Atomic Radius*[b] *(nm)*	*Metal*	*Crystal Structure*	*Atomic Radius (nm)*
Aluminum	FCC	0.1431	Molybdenum	BCC	0.1363
Cadmium	HCP	0.1490	Nickel	FCC	0.1246
Chromium	BCC	0.1249	Platinum	FCC	0.1387
Cobalt	HCP	0.1253	Silver	FCC	0.1445
Copper	FCC	0.1278	Tantalum	BCC	0.1430
Gold	FCC	0.1442	Titanium (α)	HCP	0.1445
Iron (α)	BCC	0.1241	Tungsten	BCC	0.1371
Lead	FCC	0.1750	Zinc	HCP	0.1332

[a]FCC = face-centered cubic; HCP = hexagonal close-packed; BCC = body-centered cubic.
[b]A nanometer (nm) equals 10^{-9} m; to convert from nanometers to angstrom units (Å), multiply the nanometer value by 10.

3.2. Metallic Structures

Theoretical density ρ

- A knowledge of the crystal structure of a metallic solid permits computation of its theoretical density **ρ** through the relationship:

$$\boxed{\rho = \frac{nA}{V_C N_A}}$$

n = number of atoms associated with each unit cell

A = atomic weight

V_C = volume of the unit cell

N_A = Avogadro's number (6.022×10^{23} atoms/mol)

3.2. Metallic Structures

Polymorphism and Allotropy

- **Some metals**, as well as **nonmetals**, may have **more than one crystal structure**, a phenomenon known as **polymorphism**.
- When found in **elemental solids**, the condition is often termed **allotropy**.
- The prevailing **crystal structure** depends on **both the temperature** and the **external pressure**.
- One familiar **example** is found in **carbon**: **graphite** is the stable polymorph at **ambient conditions**, whereas **diamond** is formed at **extremely high pressures**.
- Also, **pure iron** has a **BCC** crystal structure at **room temperature**, which changes to **FCC iron at 912°C.**
- Most often a **modification of the density** and other **physical properties** accompanies a **polymorphic transformation**.

Contents

Lecture 6:

Chap3: Crystalline Structure — Perfection

3.1. Crystal Structures Fundamentals

3.2. Metallic Structures

3.3. Crystal Systems, Positions, Directions, and Planes

3.4. Linear and planar densities

3.5. Close-packed crystal structures

Crystal Systems

- Because there are many **different possible crystal structures**, it is sometimes **convenient** to **divide them into groups according to unit cell configurations** and/or **atomic arrangements**.

- One such scheme is based on the **unit cell geometry,** that is, the **shape** of the appropriate unit cell parallelepiped **without regard to the atomic positions in the cell**.

- Within this framework, an **xyz coordinate system** is established with its **origin** at one of the unit cell **corners**; each of **the x, y, and z axes coincides with one of the three parallelepiped edges** that extend from this corner.

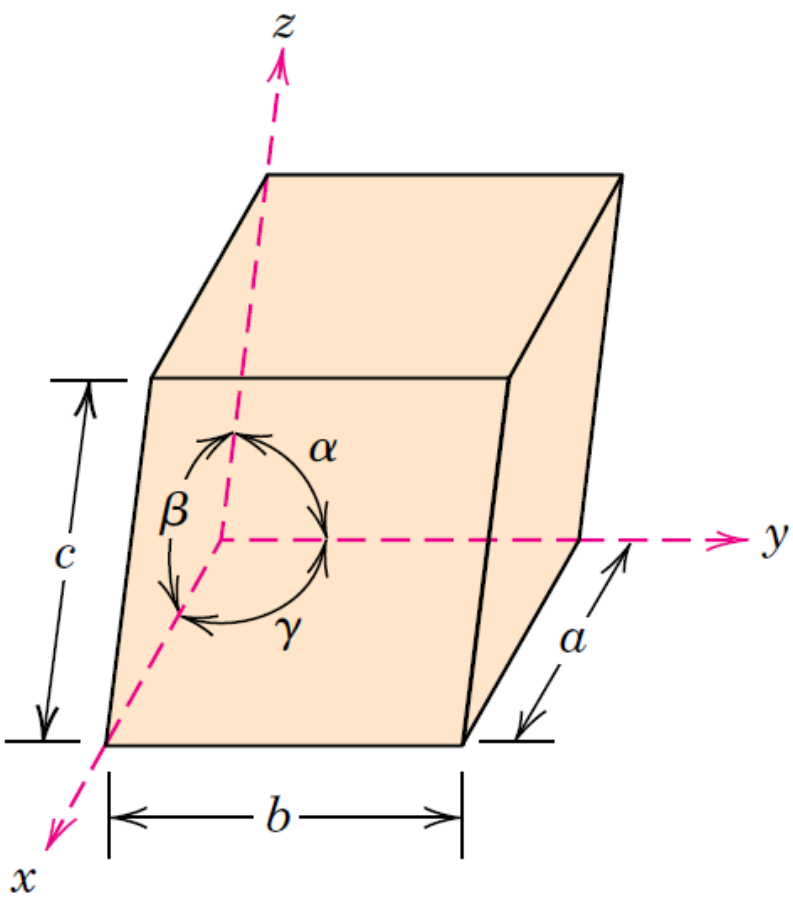

A unit cell with *x*, *y*, and *z* coordinate axes, showing axial lengths (*a*, *b*, and *c*) and interaxial angles (α, β, and γ).

Crystal Systems

- The unit cell **geometry** is completely **defined** in terms of **six parameters**: the **three edge lengths a, b, and c**, and the **three interaxial angles α, β, and γ**. These are sometimes termed the **lattice parameters** of a **crystal structure**.

- On this basis there are **seven different possible combinations** of a, b, and c and α, β, and γ, each of which represents a distinct crystal system.

- These **seven crystal** systems are **cubic**, **tetragonal**, **hexagonal**, **orthorhombic**, **rhombohedral**, **monoclinic**, and **triclinic**.

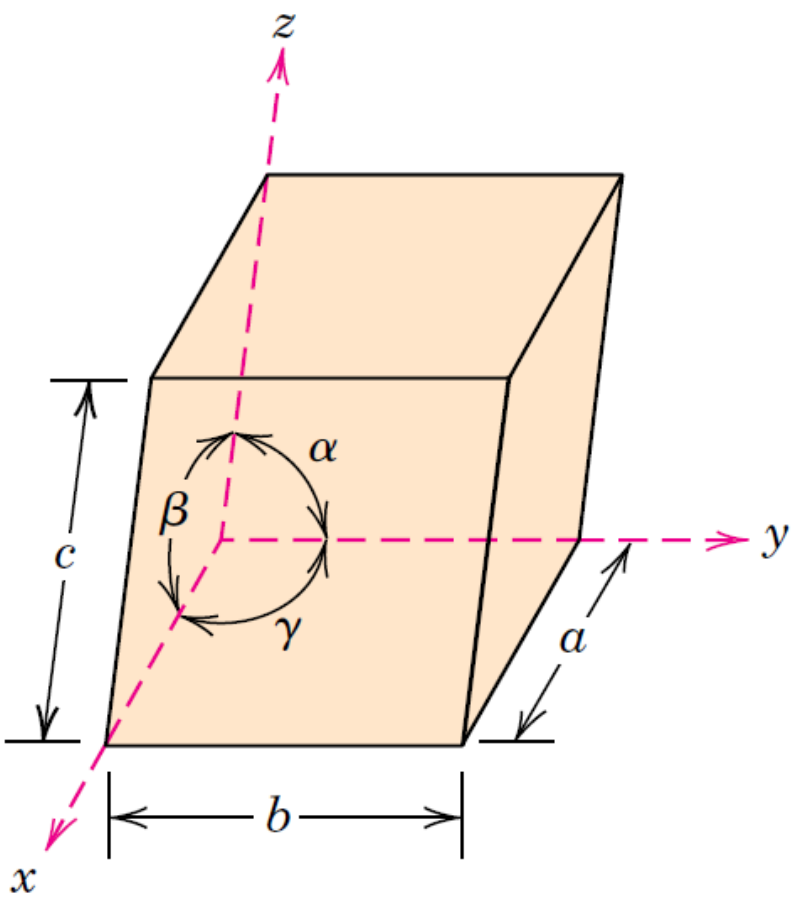

A unit cell with *x*, *y*, and *z* coordinate axes, showing axial lengths (*a*, *b*, and *c*) and interaxial angles (α, β, and γ).

Crystal Systems

	Crystal System	Axial Relationships	Interaxial Angles	Unit Cell Geometry
1	Cubic	$a = b = c$	$\alpha = \beta = \gamma = 90°$	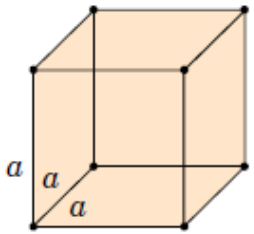
2	Hexagonal	$a = b \neq c$	$\alpha = \beta = 90°, \gamma = 120°$	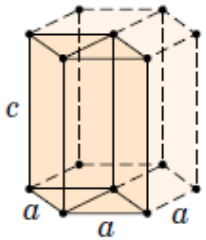
3	Tetragonal	$a = b \neq c$	$\alpha = \beta = \gamma = 90°$	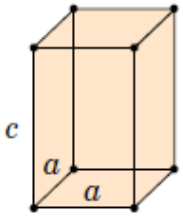

Crystal Systems

4	Rhombohedral (Trigonal)	$a = b = c$	$\alpha = \beta = \gamma \neq 90°$	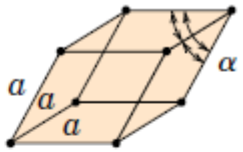
5	Orthorhombic	$a \neq b \neq c$	$\alpha = \beta = \gamma = 90°$	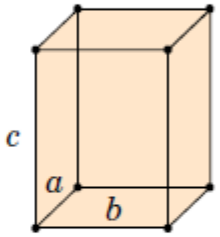
6	Monoclinic	$a \neq b \neq c$	$\alpha = \gamma = 90° \neq \beta$	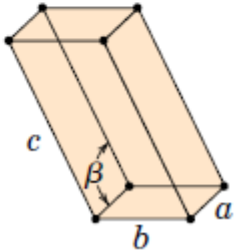

Crystal Systems

7	Triclinic	$a \neq b \neq c$	$\alpha \neq \beta \neq \gamma \neq 90°$	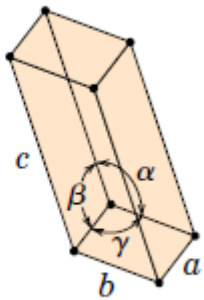

- The **cubic system**, for which **a = b =c and α = β = γ = 90°,** has the **greatest degree** of **symmetry**. The **least** symmetry is displayed by the **triclinic system**, because **a ≠ b ≠ c and α ≠ β ≠ γ.**

- From the discussion of metallic crystal structures, it should be apparent that both **FCC** and **BCC** structures belong to the **cubic crystal system**, whereas **HCP** falls within the **hexagonal system**. The conventional **hexagonal** unit cell really consists of **three parallelepipeds** situated as shown in the Table.

Positions (Point Coordinates)

- When dealing with crystalline materials, it often becomes **necessary** to **specify** a **particular point within a unit cell**, a **crystallographic direction**, or some **crystallographic plane** of atoms.

- Labeling **conventions** have been established in which **three numbers** or **indices** are used to designate point locations, directions, and planes.

- The basis for determining index values is the unit cell, with a **right-handed coordinate system** consisting of three (**x, y, and z**) axes situated at one of the corners and **coinciding** with the unit cell **edges**.

- For some crystal systems—namely, **hexagonal**, **rhombohedral**, **monoclinic**, and **triclinic**—the **three axes** are **not mutually perpendicular**, as in the familiar Cartesian coordinate scheme.

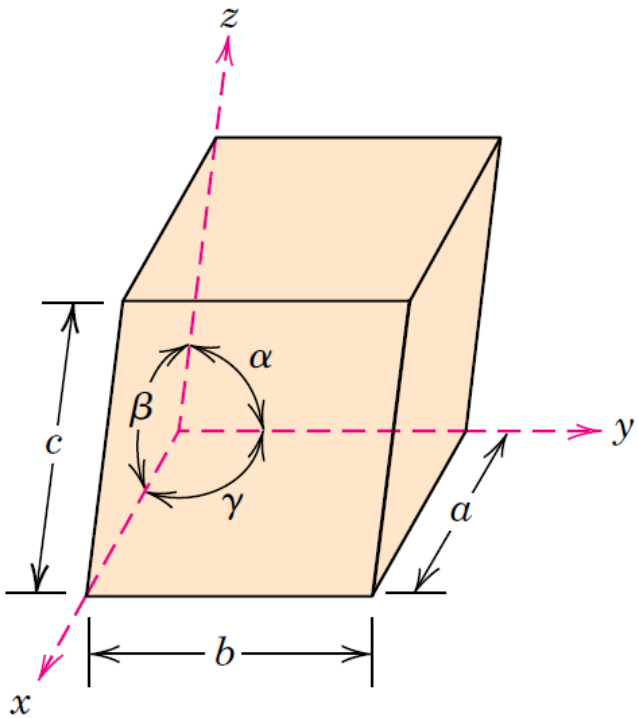

A unit cell with *x*, *y*, and *z* coordinate axes, showing axial lengths (*a*, *b*, and *c*) and interaxial angles (α, β, and γ).

Positions (Point Coordinates)

- Sometimes it is necessary to specify a **lattice position** within a unit cell. This is possible using **three point coordinate indices**: **q, r, and s.**

- These indices are **fractional multiples** of **a, b, and c** unit cell edge lengths—that is, **q is some fractional length of a along the x** axis, r is some fractional length of b along the y axis, and similarly for s.

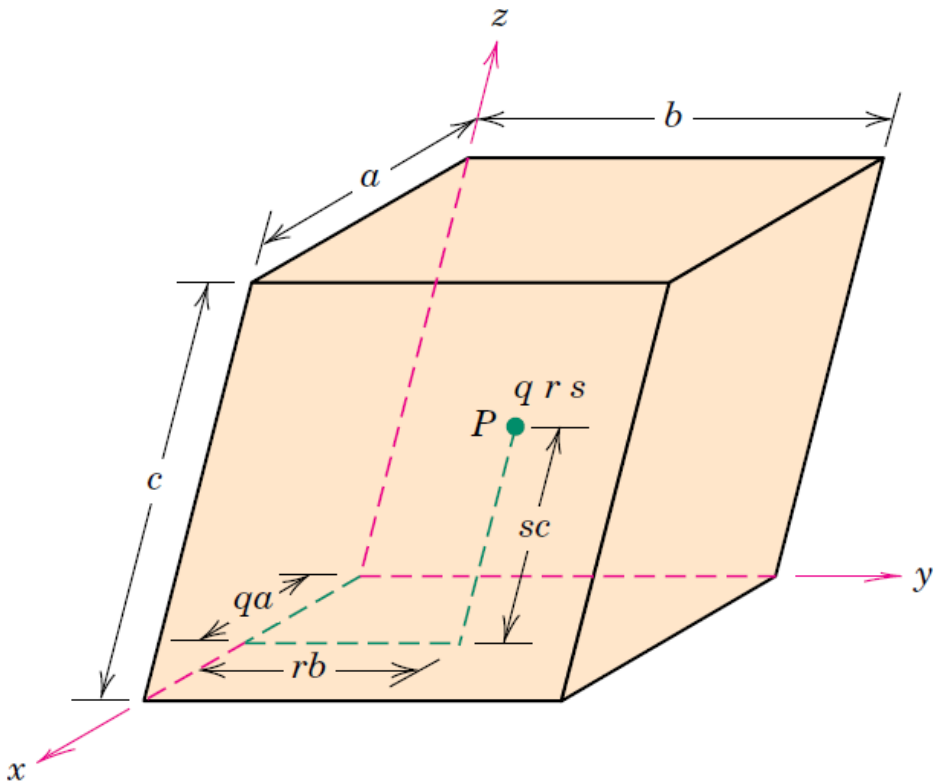

The manner in which the q, r, and s coordinates at point P within the unit cell are determined. The q coordinate (which is a fraction) corresponds to the distance qa along the x axis, where a is the unit cell edge length. The respective r and s coordinates for the y and z axes are determined similarly.

Crystallographic Directions

- A crystallographic **direction** is defined as a **line directed between two points**, or a **vector**.
- The **following steps** are used to **determine** the **three directional indices**:

1. A right-handed **x-y-z coordinate system** is first **constructed**. As a matter of convenience, its **origin** may be located at a **unit cell corner**.
2. The **coordinates** of **two points** that lie on the direction vector (referenced to the coordinate system) are determined—for example, for the vector tail, point 1: **x_1, y_1, and z_1;** whereas for the vector head, point 2: **x_2, y_2, and z_2.**
3. Tail point coordinates are **subtracted** from head point components—that is, $x_2 - x_1$, $y_2 - y_1$, and $z_2 - z_1$.
4. These **coordinate differences** are then **normalized** in terms of (i.e., divided by) their respective a, b, and c lattice parameters, which yields a set of three numbers.

$$\boxed{\frac{x_2 - x_1}{a} \quad \frac{y_2 - y_1}{b} \quad \frac{z_2 - z_1}{c}}$$

Crystallographic Directions

5. If necessary, these **three numbers** are **multiplied** or **divided** by a common factor to reduce them to the **smallest integer values**.
6. The **three resulting indices**, not separated by commas, are enclosed in **square brackets**, thus: **[uvw].** The u, v, and w integers correspond to the **normalized coordinate differences** referenced to the x, y, and z axes, respectively.

- In summary, the u, v, and w indices may be determined using the following equations:

$$u = n\left(\frac{x_2 - x_1}{a}\right) \qquad v = n\left(\frac{y_2 - y_1}{b}\right) \qquad w = n\left(\frac{z_2 - z_1}{c}\right)$$

Crystallographic Directions

- For each of the three axes, there are both **positive** and **negative coordinates**.

- Thus, **negative** indices are also possible, which are represented by a **bar** over the appropriate index. For **example**, the **[1$\bar{1}$1]** direction has a component in the **-y** direction.

- Also, **changing** the **signs** of **all indices** produces an antiparallel direction; that is, **[$\bar{1}$1$\bar{1}$]** is **directly opposite** to **[1$\bar{1}$1]**.

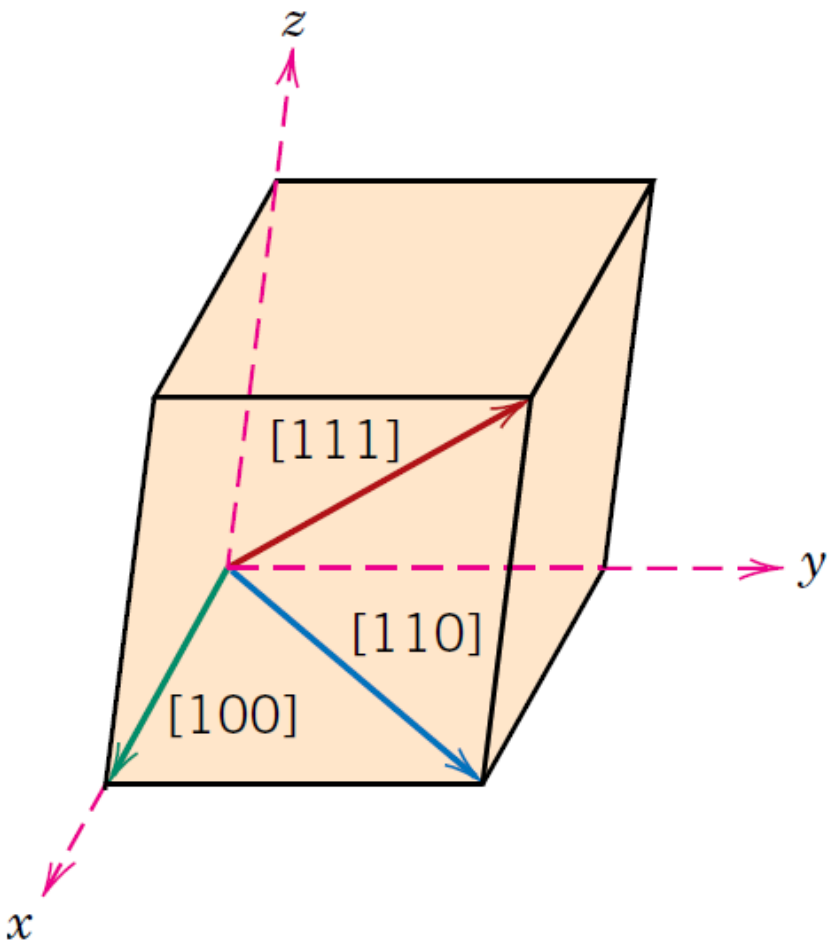

The [100], [110], and [111] directions within a unit cell.

Crystallographic Directions

- For some crystal structures, several **nonparallel directions** with different indices are **crystallographically equivalent**, meaning that **the spacing of atoms along each direction is the same.**

- **For example:** in **cubic** crystals, **all the directions** represented by the following indices are equivalent: **[100], [$\bar{1}$00], [010], [0$\bar{1}$0], [001], and [00$\bar{1}$]**.

- As a convenience, equivalent directions are grouped together into a **family**, which is enclosed in angle brackets, thus: **<100>.**

- Furthermore, directions in **cubic crystals** having the **same indices** **without regard to order or sign**—for example, [123] and [$\bar{2}$1$\bar{3}$]—are **equivalent**.

- This is, in general, **not true for other crystal systems**. **For example**, for crystals of tetragonal symmetry, the [100] and [010] directions are equivalent, whereas the [100] and [001] are not.

Directions in Hexagonal Crystals

- A **problem** arises for crystals having hexagonal symmetry in that some equivalent crystallographic directions **do not have** the same set of indices.

- **For example:** the [111] direction is equivalent to [101] rather than to a direction with indices that are combinations of 1 and -1.

- This situation is addressed using **a four-axis, or Miller–Bravais**, coordinate system.

- The **three a_1, a_2, and a_3** axes are all contained within a single plane (called the **basal plane**) and are at **120°** angles to one another. **The z axis is perpendicular** to this **basal** plane.

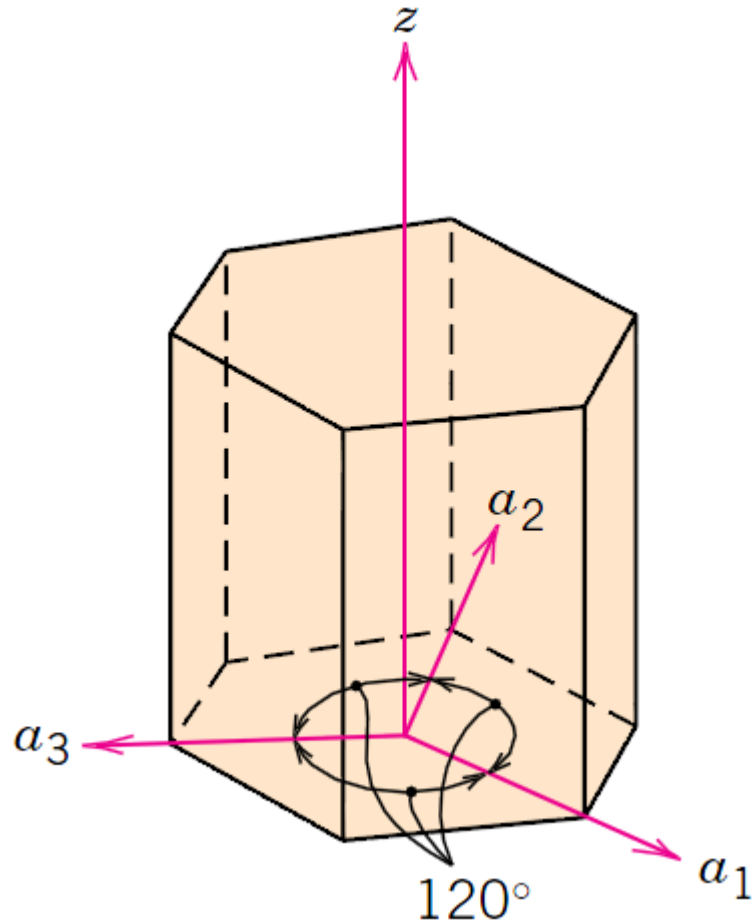

Coordinate axis system for a hexagonal unit cell (Miller–Bravais scheme).

Directions in Hexagonal Crystals

- Directional indices, which are obtained as described earlier, are denoted by **four indices, as [uvtw];** by convention, the **u, v, and t indices relate to vector coordinate differences referenced to the respective a_1, a_2, and a_3 axes in the basal plane**; the **fourth index "w" pertains to the z axis**.

- Conversion from the three-index system to the four-index system as:

$$[UVW] \rightarrow [uvtw]$$

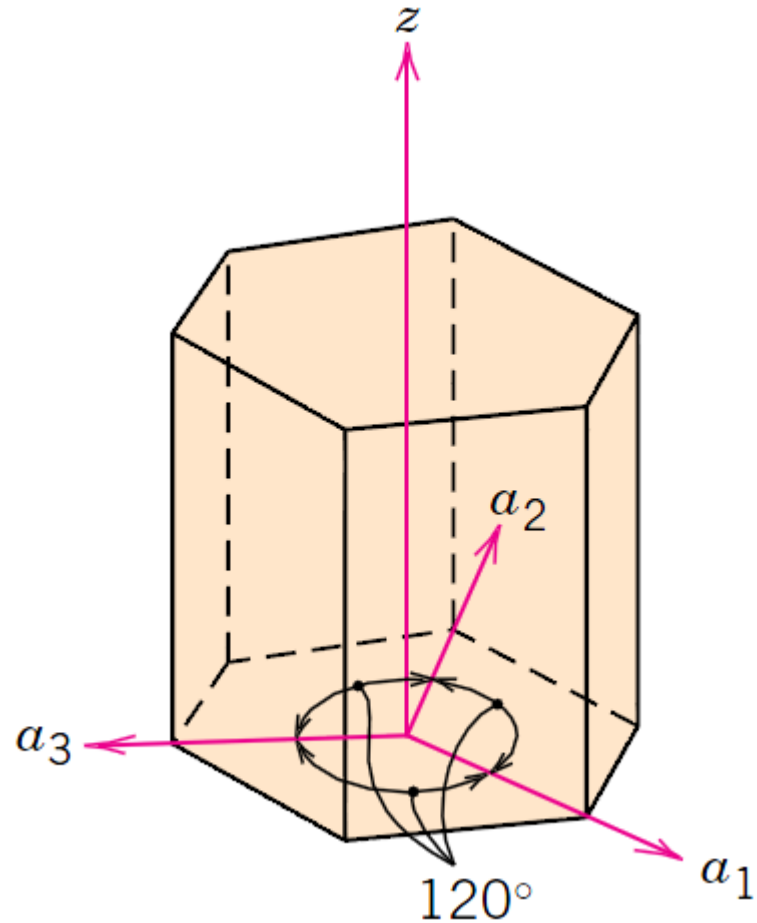

Coordinate axis system for a hexagonal unit cell (Miller–Bravais scheme).

Directions in Hexagonal Crystals

- The Conversion is accomplished using the following formulas:

$$u = \frac{1}{3}(2U - V)$$

$$v = \frac{1}{3}(2V - U)$$

$$t = -(u + v)$$

$$w = W$$

- For example, using these equations, the [010] direction becomes $[\bar{1}2\bar{1}0]$.

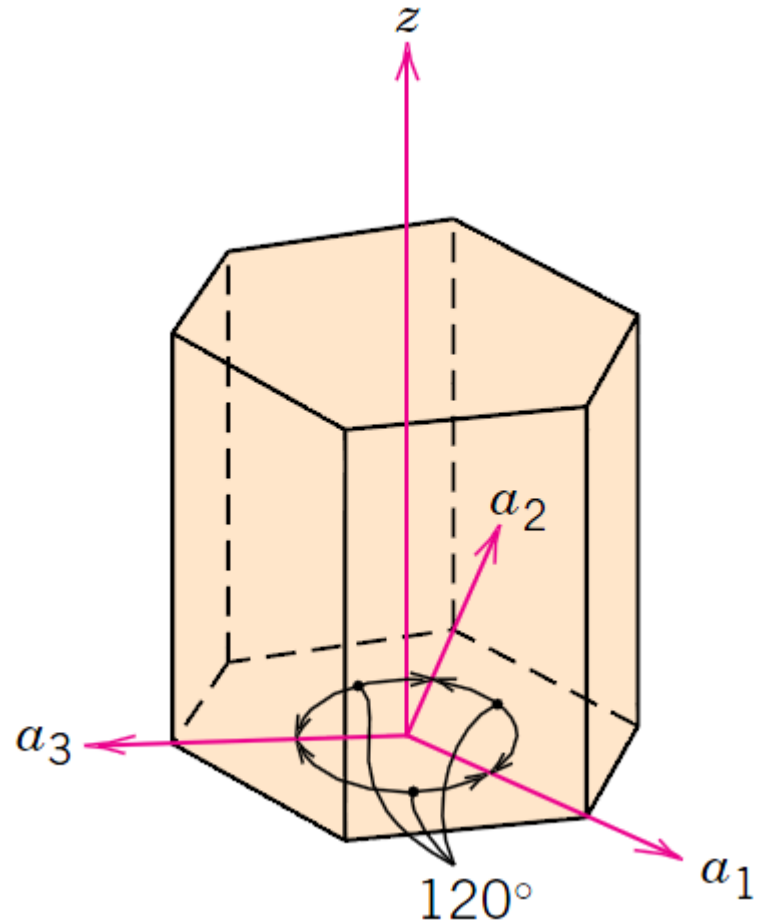

Coordinate axis system for a hexagonal unit cell (Miller–Bravais scheme).

Directions in Hexagonal Crystals

- Examples:

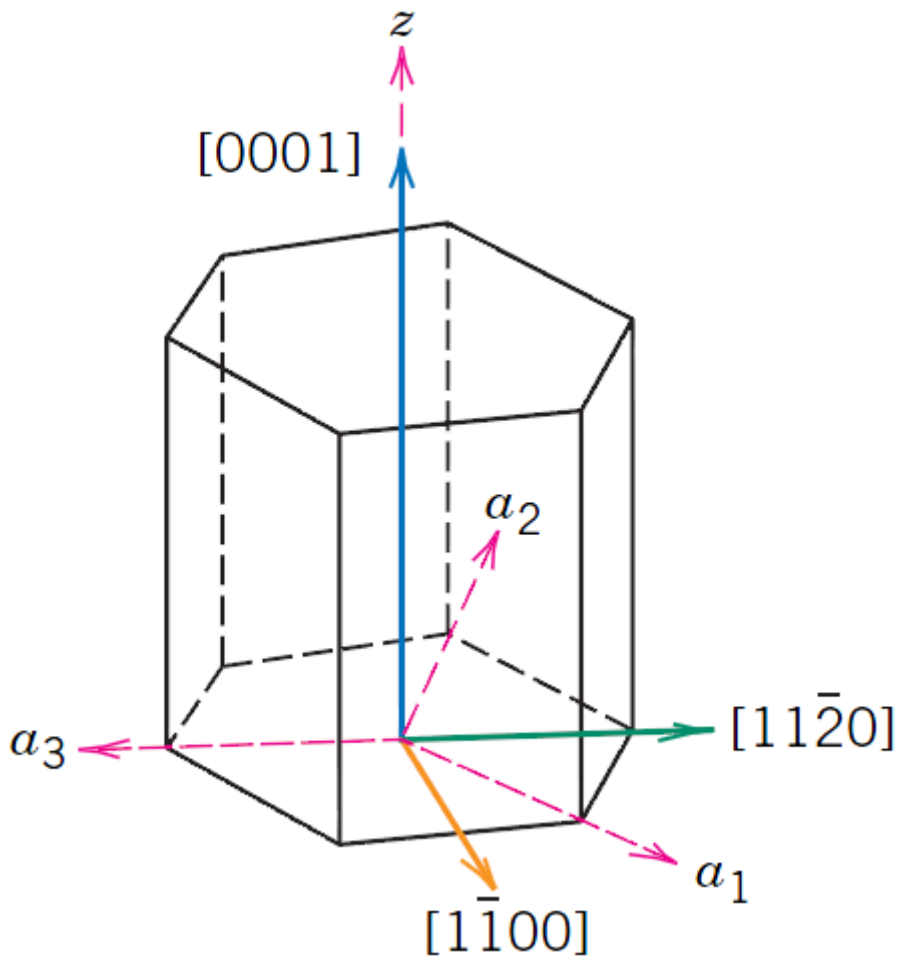

Directions in Hexagonal Crystals

- When plotting crystallographic directions for hexagonal crystals **it is sometimes more convenient to modify the four-axis coordinate system**. A **grid** has been constructed **on the basal plane** that consists of **sets of lines parallel to each of the a_1, a_2, and a_3 axes.**

- **The intersections of two sets of parallel** lines (e.g., those for a_2, and a_3) lie on and trisect the other axis (i.e., **divide a1 into thirds**) within the hexagonal unit cell.

- In addition, the **z axis** of is also apportioned into **three equal lengths** (at trisection points **m and n**).

- This scheme is sometimes referred to as a ***ruled-net coordinate system***.

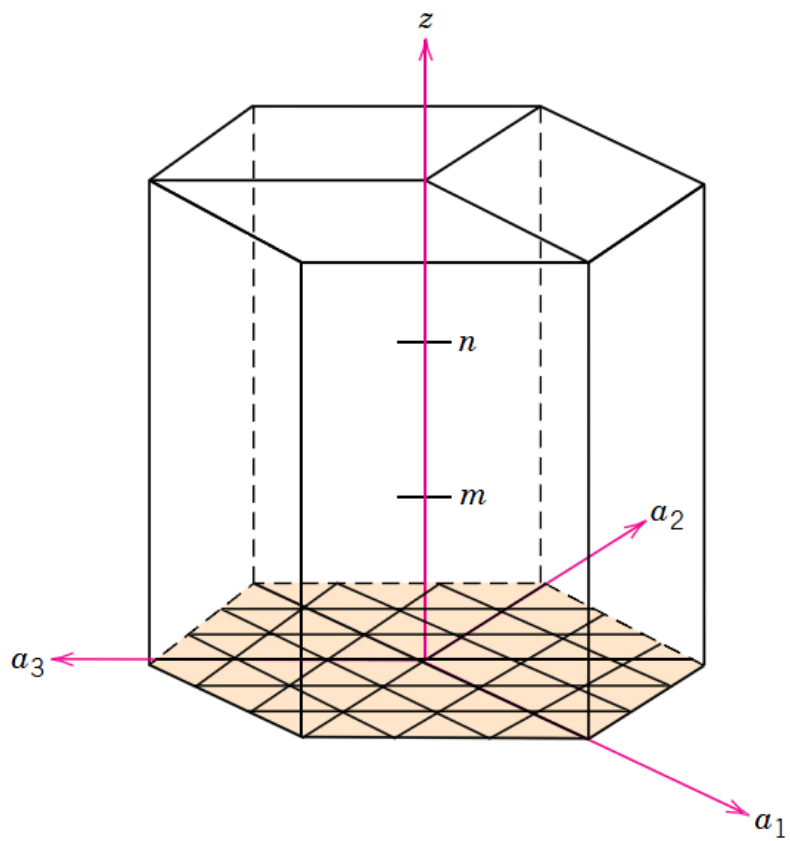

Ruled-net coordinate axis system for hexagonal unit cells that may be used to plot crystallographic directions

Directions in Hexagonal Crystals

- **Construction of a direction** specified by four indices is carried out using a procedure **similar to the one used for other crystal systems**—by the subtraction of vector tail point coordinates from head point coordinates.
- For the **four coordinate axes**, we use the following designations for head and tail coordinates:

Axis	*Head Coordinate*	*Tail Coordinate*
a_1	a_1'	a_1''
a_2	a_2'	a_2''
a_3	a_3'	a_3''
z	z'	z''

Directions in Hexagonal Crystals

- Using this scheme, the u, v, t, and w hexagonal index equivalents are:

$$u = 3n\left(\frac{a_1' - a_1''}{a}\right) \qquad t = 3n\left(\frac{a_3' - a_3''}{a}\right)$$

$$v = 3n\left(\frac{a_2' - a_2''}{a}\right) \qquad w = 3n\left(\frac{z' - z''}{c}\right)$$

In these expressions, the parameter **n is included to facilitate**, if necessary, reduction of the u, v, t, and w to integer values.

Crystallographic planes

- The orientations of planes for a crystal structure are represented in a similar manner.
- Again, the **unit cell is the basis**, with the **three-axis coordinate system**.
- In **all crystal system (except the hexagonal),** crystallographic planes are specified by **three Miller indices as (hkl).**
- Any **two planes parallel** to each other are **equivalent** and have **identical indices**.

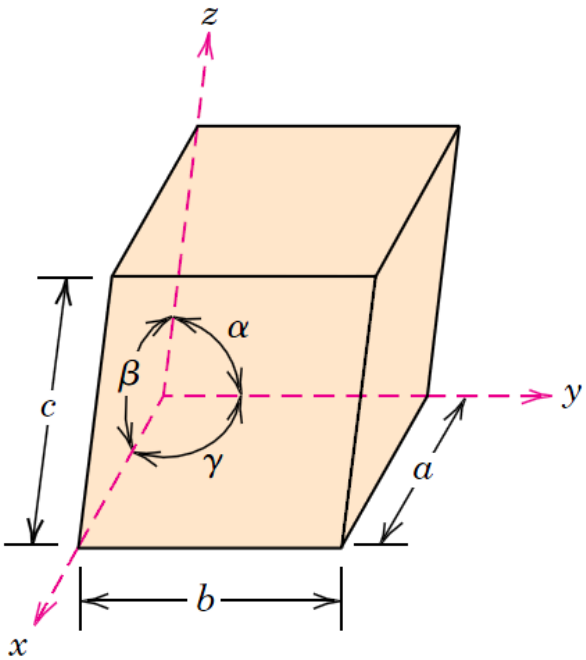

Crystallographic planes

- The **procedure used to determine the h, k, and l** index numbers is as follows:

1. **If the plane passes through the selected origin**, either **another parallel plane must be constructed** within the unit cell by an appropriate **translation**, or a **new origin must be established at the corner of another unit cell**.
2. At this point, the crystallographic plane either **intersects or parallels each of the three axes**. The coordinate for the intersection of the crystallographic plane with each of the axes is determined (referenced to the origin of the coordinate system). These **intercepts for the x, y, and z axes will be designed by A, B, and C**, respectively.
3. The **reciprocals of these numbers** are taken **(1/A; 1/B; 1/C)**. A plane that **parallels an axis is considered to have an infinite intercept** and therefore a **zero index.**
4. The reciprocals of the intercepts are **then normalized** in terms of (i.e., multiplied by) their respective **a, b, and c lattice parameters**. That is,

$$\frac{a}{A} \quad \frac{b}{B} \quad \frac{c}{C}$$

Crystallographic planes

5. If necessary, these three numbers are changed to the set of smallest integers by **multiplication or by division by a common factor "n".**
6. Finally, the integer indices, **not separated by commas**, are **enclosed within parentheses, thus: (hkl).** The h, k, and l integers correspond to the normalized intercept reciprocals referenced to the x, y, and z axes, respectively.

$$h = \frac{na}{A}$$

$$k = \frac{nb}{B}$$

$$l = \frac{nc}{C}$$

- An intercept on the **negative** side of the origin is indicated by a **bar** or **minus** sign positioned over the appropriate index.

- Furthermore, **reversing** the directions of **all indices** specifies **another plane parallel** to, **on the opposite side** of, and **equidistant** from the **origin**.

Crystallographic planes

- Examples:

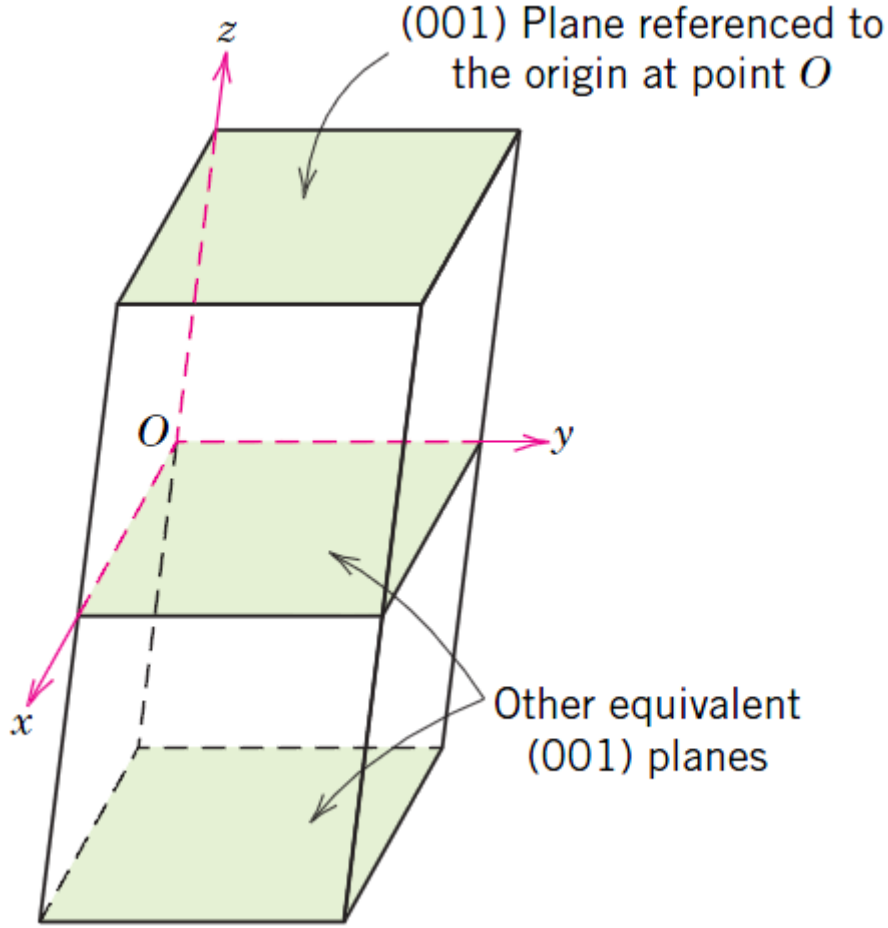

Representations of a series each of (001) crystallographic planes.

Crystallographic planes

- Examples:

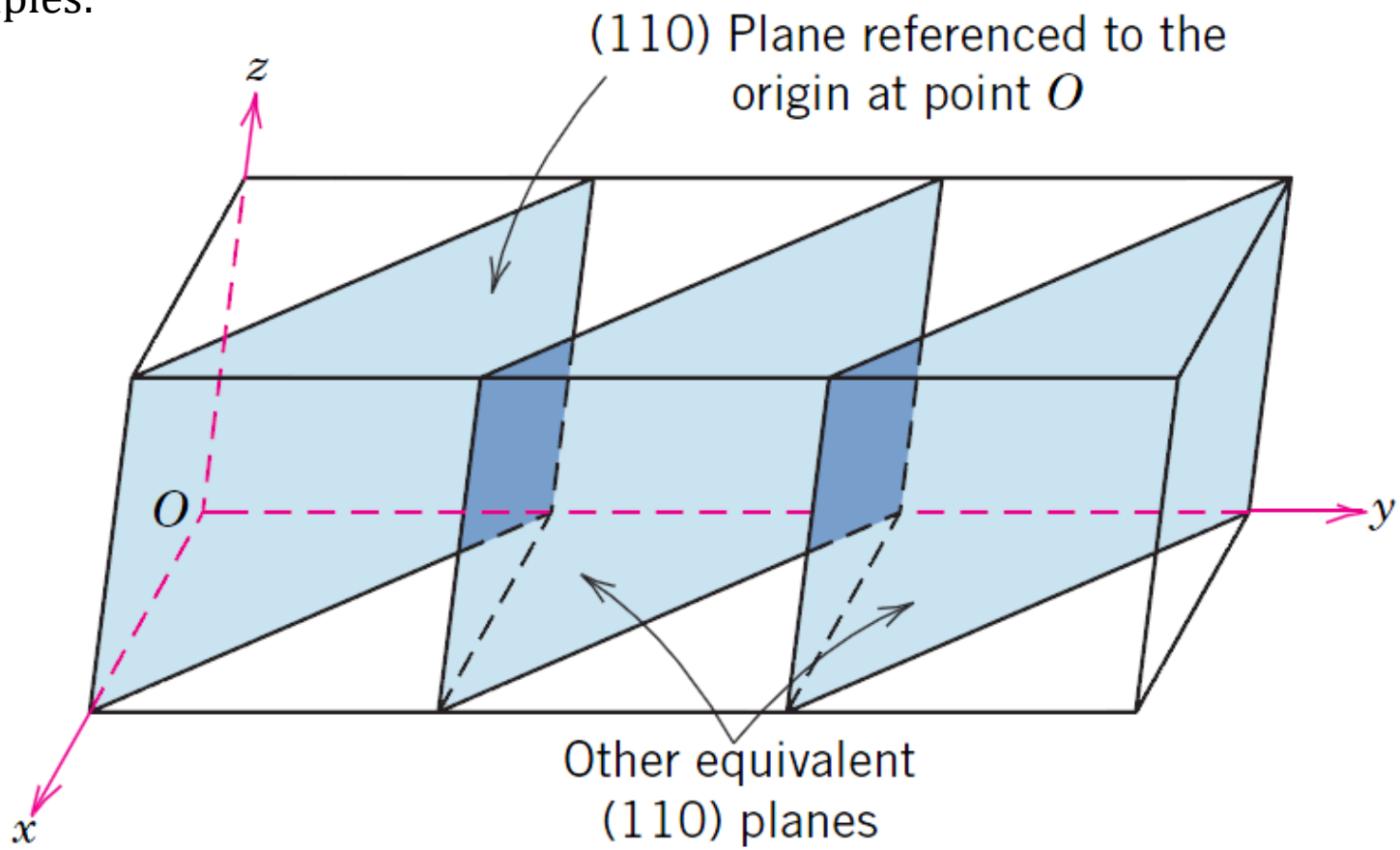

Representations of a series each of (110) crystallographic planes.

Crystallographic planes

- Examples:

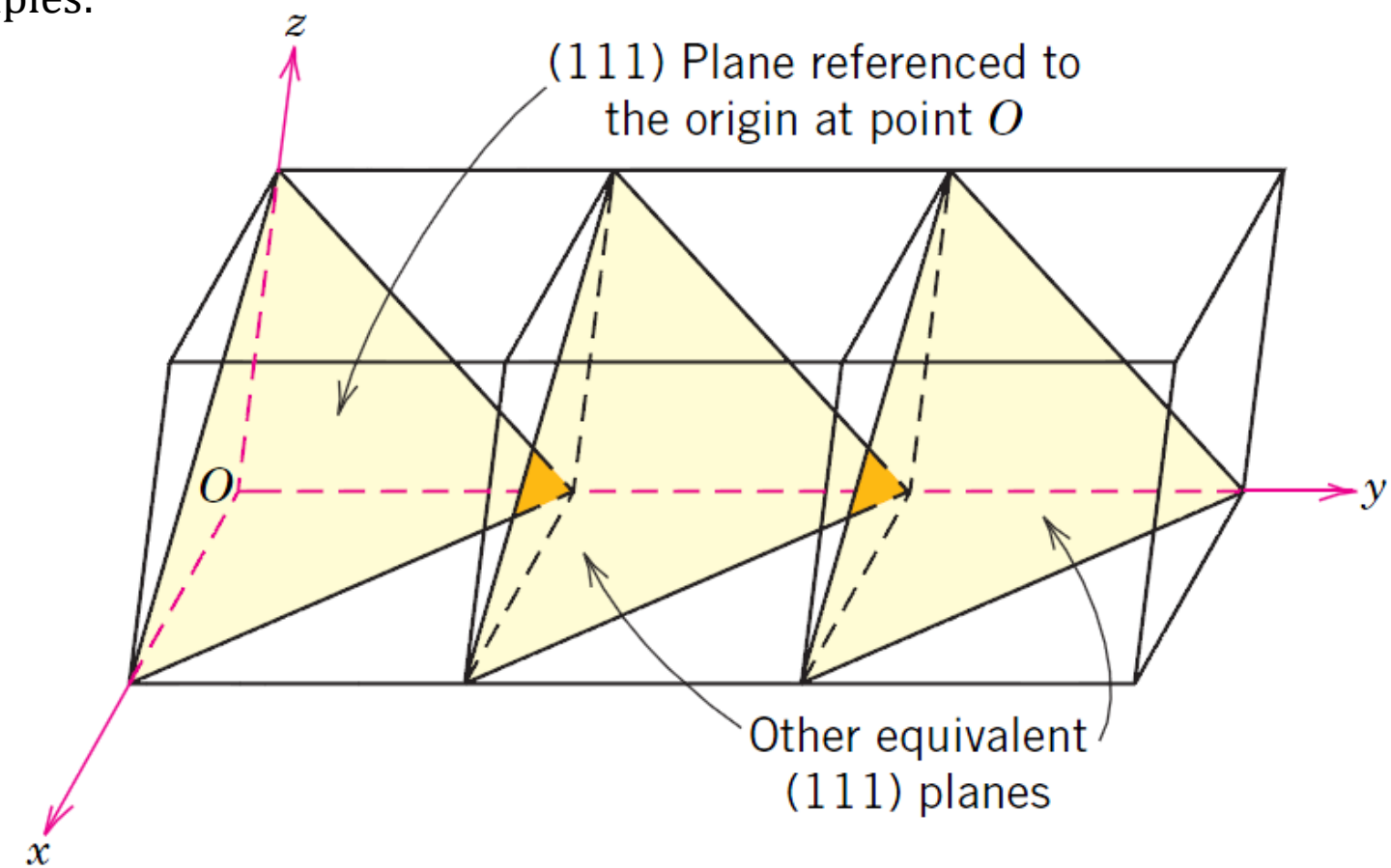

Representations of a series each of (111) crystallographic planes.

Crystallographic planes

- One interesting and unique characteristic of **cubic crystals** is that **planes and directions** having the **same indices** are **perpendicular** to one another.

- However, for other crystal systems there are no simple geometrical relationships between planes and directions having the same indices.

- **Example of cubic crystals:** (100) plane and <100> directions are perpendicular to each other.

- **If [uvw] direction is parallel to (hkl),** that is if [uvw] **lies in the plane** (hkl) then hu + kv + lw = 0.

- **For example:** [-110] lies in the plane (111) since 1.(-1) + 1.1 + 1.0 = 0

Atomic Arrangements

- The **atomic arrangement** for a crystallographic plane, which is often of interest, **depends on the crystal structure.**
- The atomic packing is different for each case. The **circles represent atoms** lying in the **crystallographic planes** as would be obtained from a **slice** taken through the centers of the full-size hard spheres.

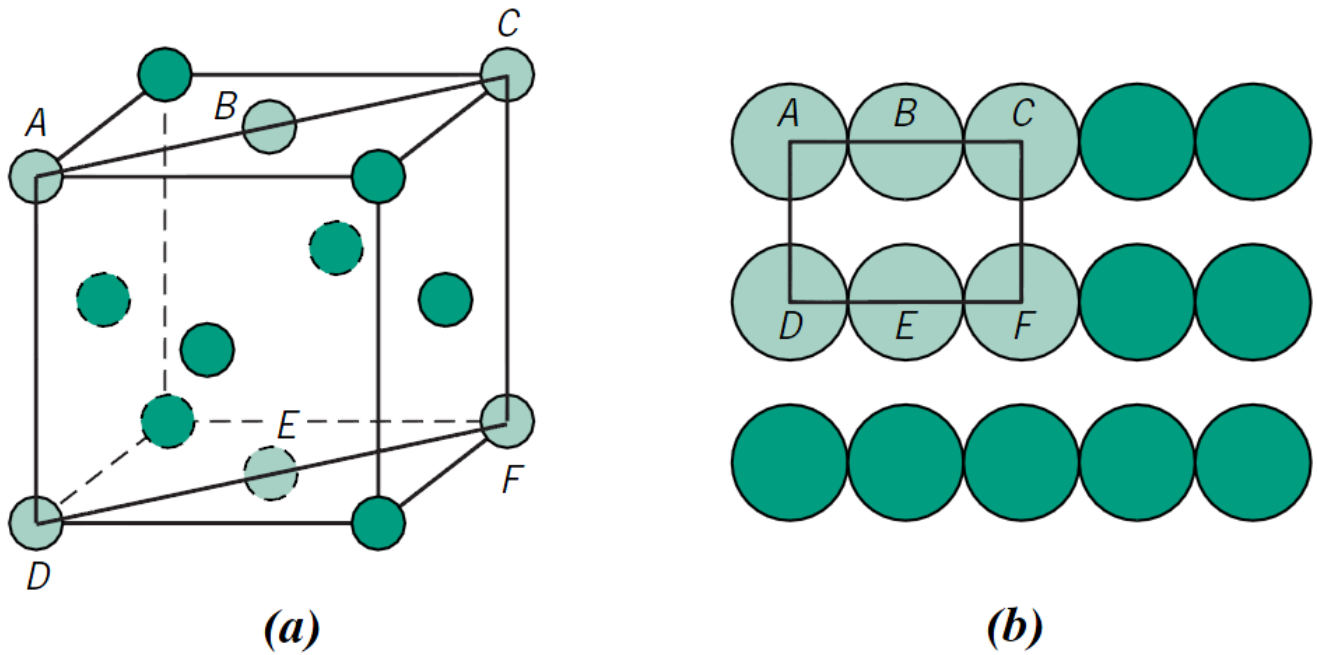

*(a) Reduced-sphere **FCC** unit cell with the (110) plane. (b) Atomic packing of an **FCC** (110) plane.*

Atomic Arrangements

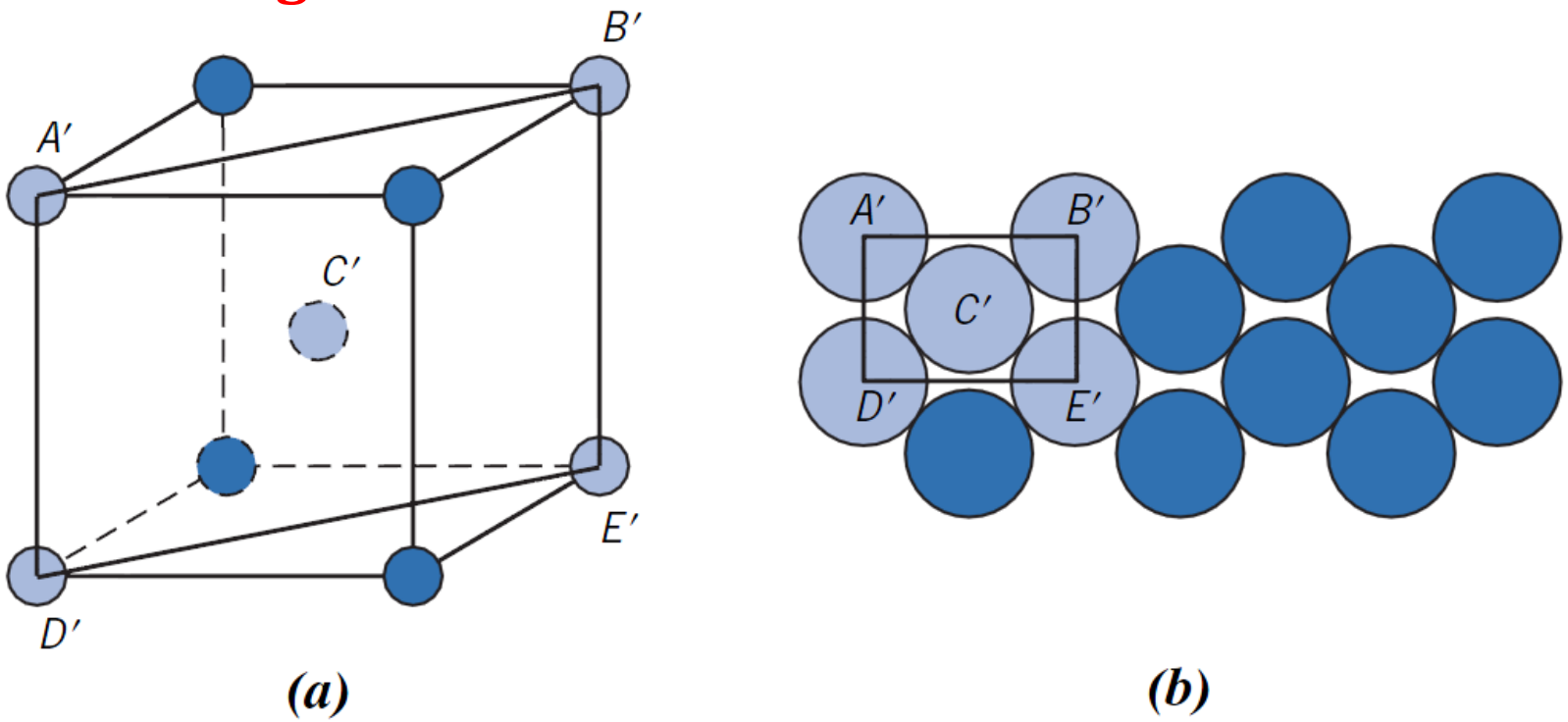

*(a) Reduced-sphere **BCC** unit cell with the (110) plane. (b) Atomic packing of a **BCC** (110) plane.*

Atomic Arrangements

- A **"family" of planes** contains all planes that are **crystallographically equivalent**—that is, having **the same atomic packing**.

- A family is designated by indices enclosed in braces—such as **{100}**.

- **For example:** in cubic crystals, the (111), $(\bar{1}\bar{1}\bar{1})$, $(\bar{1}11)$, $(1\bar{1}\bar{1})$, $(11\bar{1})$, $(\bar{1}\bar{1}1)$, $(\bar{1}1\bar{1})$, and $(1\bar{1}1)$ planes all belong to the $\{111\}$ family.

- However, for **tetragonal** crystal structures, the $\{100\}$ family contains only the (100), $(\bar{1}00)$, (010), and $(0\bar{1}0)$ planes because the (001) and $(00\bar{1})$ planes are not crystallographically equivalent.

- Also, in the **cubic system only**, planes having the **same indices**, **irrespective of order and sign**, are equivalent. For example, both $(1\bar{2}3)$ and $(3\bar{1}2)$ belong to the $\{123\}$ family.

Hexagonal Crystals

- For crystals having **hexagonal** symmetry, it is **desirable that equivalent planes have the same indices**; as with directions, this is accomplished by the **Miller–Bravais system.**
- This convention leads to the **four-index (hkil)** scheme, which is favored in most instances because it more clearly identifies the orientation of a plane in a hexagonal crystal.
- There is some redundancy in that "i " is determined by the sum of h and k through:

$$i = -(h + k)$$

- Otherwise, the three **h, k, and l indices are identical for both indexing systems**.
- We determine **these indices in a manner analogous to that used for other crystal systems** as described previously—that is, taking normalized reciprocals of axial intercepts, as described in the following example problem.

Hexagonal Crystals

- Examples:

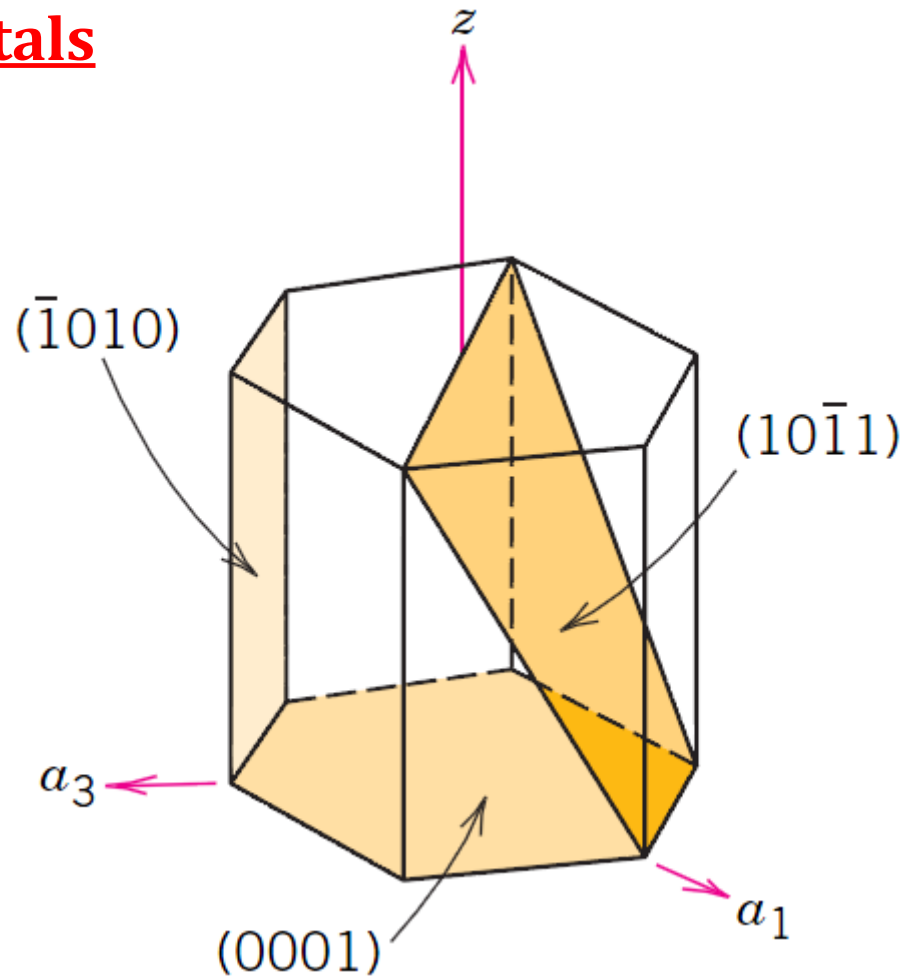

For the hexagonal crystal system, the (0001), $(10\bar{1}1)$, and $(\bar{1}010)$ planes.

3.3. Crystal Systems, Positions, Directions, and Planes

Summary of Equations Used to Determine Crystallographic Point, Direction, and Planar Indices

Coordinate Type	*Index Symbols*	*Representative Equation*[a]	*Equation Symbols*
Point	$q\ r\ s$	qa = lattice position referenced to x axis	—
Direction			
Non-hexagonal	$[uvw]$, $[UVW]$	$u = n\left(\frac{x_2 - x_1}{a}\right)$	x_1 = tail coordinate—x axis x_2 = head coordinate—x axis
Hexagonal	$[uvtw]$	$u = 3n\left(\frac{a_1' - a_1''}{a}\right)$	a_1' = head coordinate—a_1 axis a_1'' = tail coordinate—a_1 axis
		$u = \frac{1}{3}(2U - V)$	—
Plane			
Non-hexagonal	(hkl)	$h = \frac{na}{A}$	A = plane intercept—x axis
Hexagonal	$(hkil)$	$i = -(h + k)$	—

Contents

Lecture 6:

Chap3: Crystalline Structure — Perfection

3.1. Crystal Structures Fundamentals

3.2. Metallic Structures

3.3. Crystal Systems, Positions, Directions, and Planes

3.4. Linear and planar densities

3.5. Close-packed crystal structures

3.4. Linear and planar densities

Linear density

- The previous sections discussed the **equivalency of nonparallel crystallographic directions and planes**.

- **Directional equivalency is related to linear density** in the sense that, for a particular material, **equivalent directions have identical linear densities.**

- The corresponding parameter for crystallographic **planes is planar density**, and planes having the **same planar density values are also equivalent**.

- Linear density (LD) is defined as the number of atoms per unit length whose centers lie on the direction vector for a specific crystallographic direction:

$$\boxed{\mathrm{LD} = \frac{\text{number of atoms centered on direction vector}}{\text{length of direction vector}}}$$

The units of linear density are reciprocal length (e.g., nm^{-1}, m^{-1}).

3.4. Linear and planar densities

Linear density

- **Example:** let us determine the linear density of the [110] direction for the FCC crystal structure.
- Here, the [110] direction vector passes from the center of atom X, through atom Y, and finally to the center of atom Z.

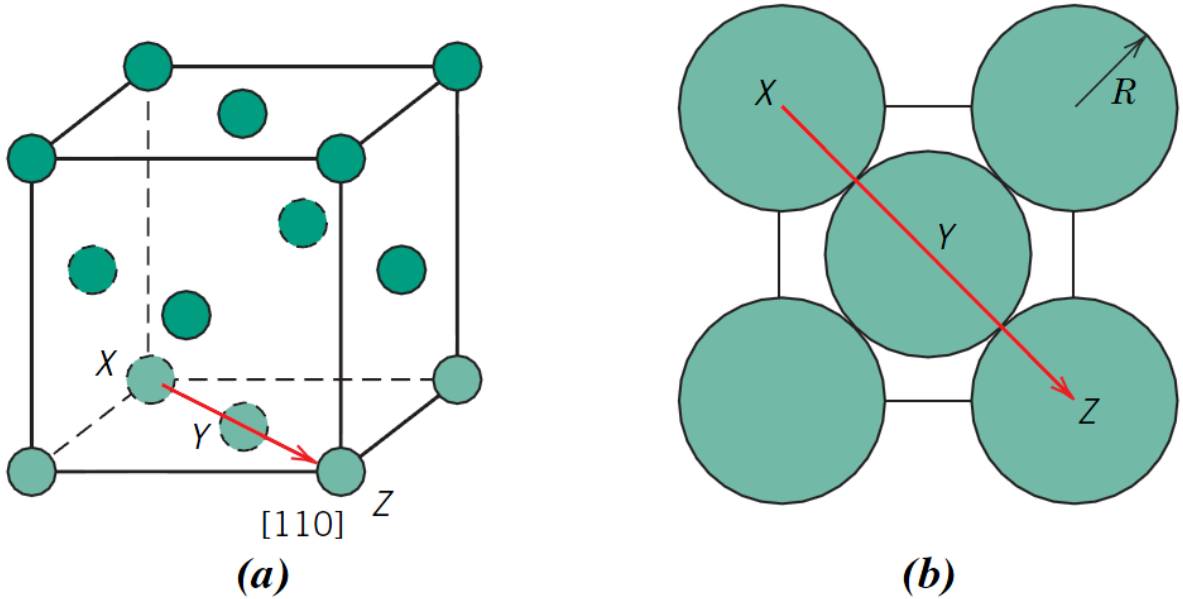

(a) Reduced-sphere FCC unit cell with the [110] direction indicated.
(b) The bottom face-plane of the FCC unit cell in (a) on which is shown the atomic spacing in the [110] direction through atoms labeled X, Y, and Z.

3.4. Linear and planar densities

Linear density

- **Example:** With regard to the numbers of atoms, it is necessary to take into account the sharing of atoms with adjacent unit cells. **Each of the X and Z corner atoms is also shared with one other adjacent unit cell along this [110] direction** (i.e., one-half of each of these atoms belongs to the unit cell being considered), whereas atom **Y lies entirely within the unit cell**.
- Thus, there is an equivalence of **two atoms** along the [110] direction vector in the unit cell.
- Now, the direction vector length is equal to 4R (Figure); thus the [110] linear density for FCC is:

$$LD_{110} = \frac{2 \text{ atoms}}{4R} = \frac{1}{2R}$$

3.4. Linear and planar densities

Planar density

- In an analogous manner, planar density (PD) is taken as the number of atoms per unit area that are centered on a particular crystallographic plane:

$$\boxed{\text{PD} = \frac{\text{number of atoms centered on a plane}}{\text{area of plane}}}$$

The units for planar density are reciprocal area (e.g., nm^{-2}, m^{-2}).

- **Example:** Consider the section of a **(110) plane within an FCC** unit cell. Although six atoms have centers that lie on this plane (next figure), **only one-quarter of each of atoms A, C, D, and F and one-half of atoms B and E**, for a total equivalence of just **2 atoms**, are on that plane.

3.4. Linear and planar densities

- **Example:**

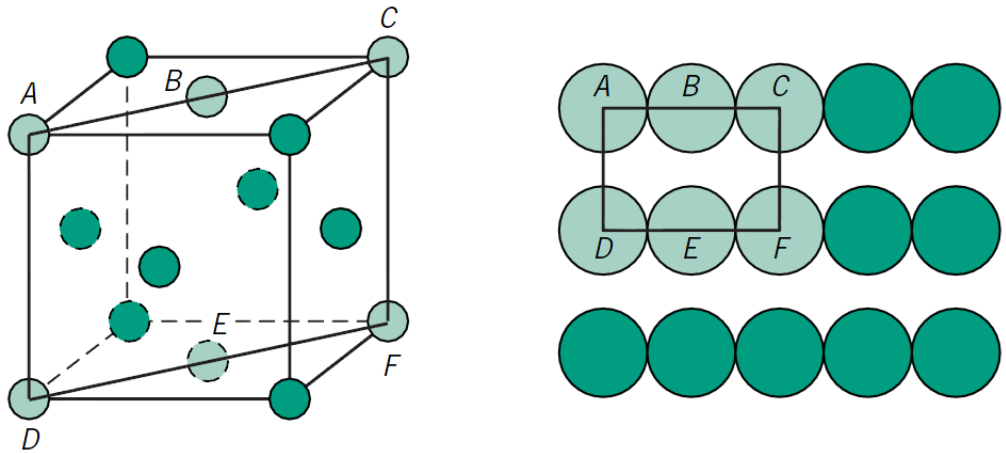

(a) *(b)*

- The area of this rectangular section is equal to the product of its length and width. From the Figure, the **length** (horizontal dimension) is equal to **4R**, whereas the width (vertical dimension) is equal to **2R√2** because it corresponds to the FCC unit cell edge length. Thus, the area of this planar region is $(4R)(2R\sqrt{2}) = 8R^2\sqrt{2}$, and the planar density is determined as follows:

$$PD_{110} = \frac{2 \text{ atoms}}{8R^2\sqrt{2}} = \frac{1}{4R^2\sqrt{2}}$$

3.4. Linear and planar densities

- Linear and planar densities are important considerations relative to the process of **slip**— that is, the mechanism by which metals plastically deform (described later).

- **Slip occurs** on the **most densely packed crystallographic planes** and, in those planes, **along directions having the greatest atomic packing**.