Camera Adapter 1, 2

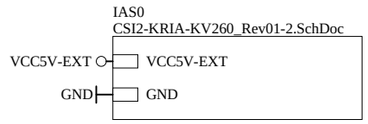

IAS0

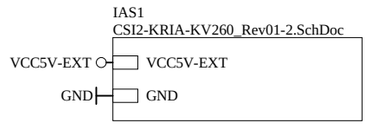

IAS1

Strict Hierarchical Design (Power Ports local)

LA1 — LABEL 7x7mm

PCB1 — CSI2-KRIA-KV260

MRK1 MRK2 MRK3 MRK4 MRK5 MRK6

T1 — PCB Text Field — PCB Text TOP

T2 — PCB Text Field — PCB Text BOT

Allied Vision Technologies GmbH	Taschenweg 2a	07646 Stadtroda		Allied Vision		
Title: CSI2-KRIA-KV260_Rev01			Confidential			
PCB:	PCBA:	3				
Author: CWA	Checked by: IHA	2				
Date: 25.05.2023	Page: 1 of 2	1				
File: CSI2-KRIA-KV260_Rev01-1.SchDoc		No.	Changes	Rev.:	Date:	Name:

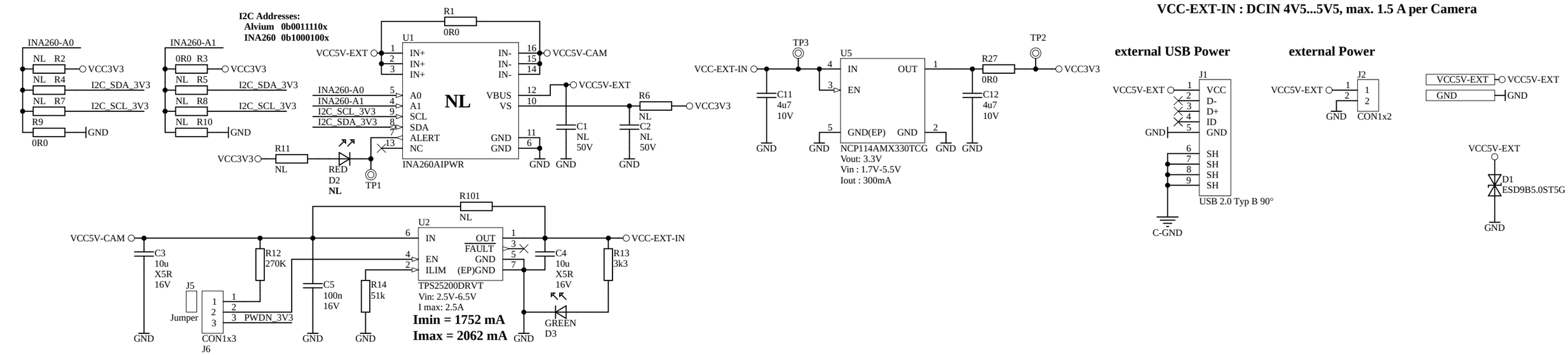

<- CAM

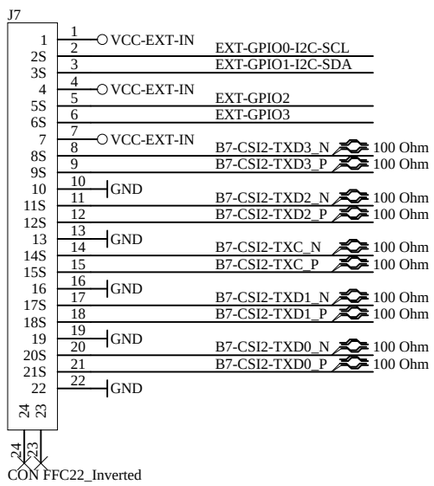

-> Carrier Board

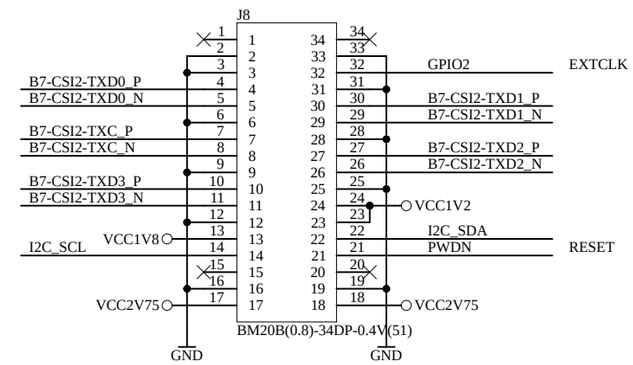

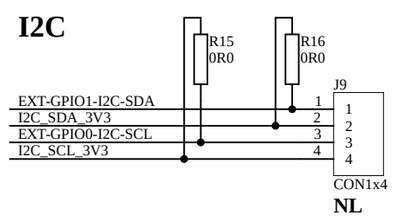

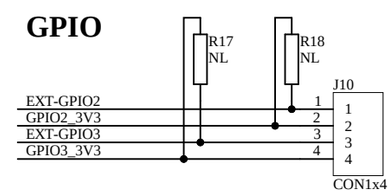

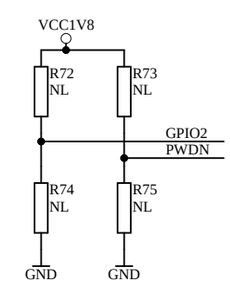

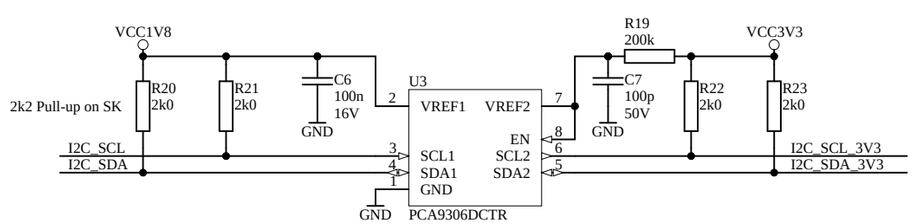

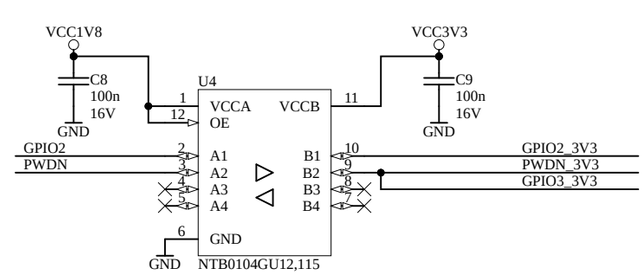

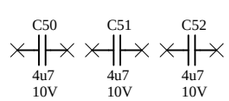

GND <-> Chassis-GND

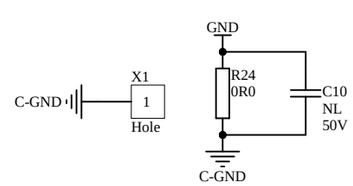

Holes on Embedded Board are connected to GND

Strict Hierarchical Design (Power Ports local)

Allied Vision Technologies GmbH	Taschenweg 2a	07646 Stadtroda	Allied Vision		
Title: CSI2-KRIA-KV260_Rev01		Confidential			
PCB:	PCBA:	3			
Author: CWA	Checked by: IHA	2			
Date: 25.05.2023	Page: 2 of 2	1			
File: CSI2-KRIA-KV260_Rev01-2.SchDoc		No.	Changes	Rev.:	Date:	Name:

References:
SOM Data Sheet DS987 (v1.0) April 20, 2021
Starter Kit Schematics 038-05058-01 REVB02