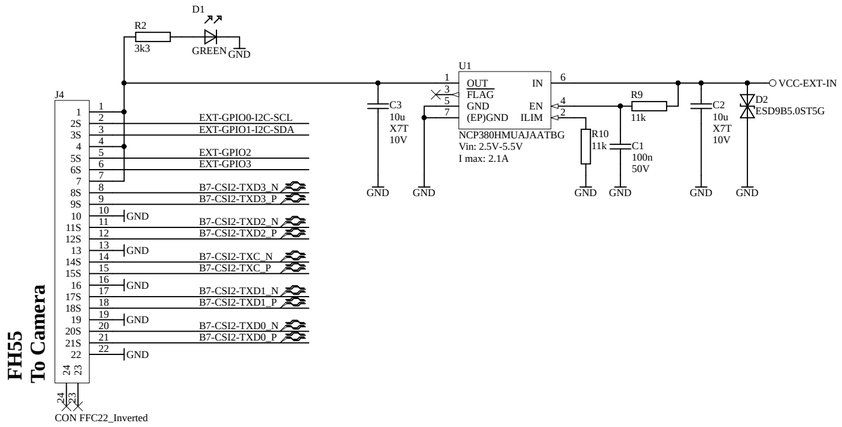

VCC-EXT : DCIN 3V75..5V5, max. 1.5 A

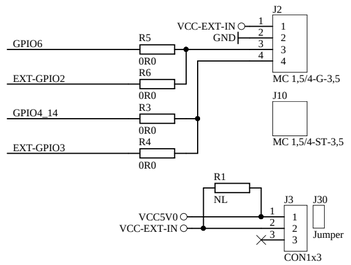

To Wandboard

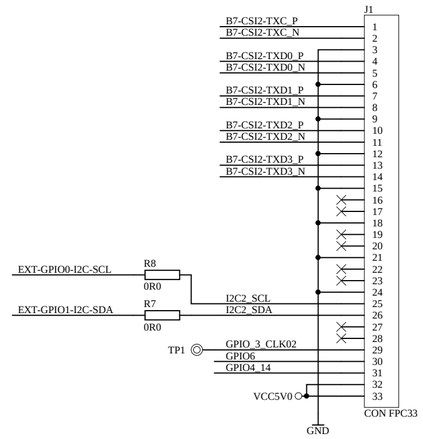

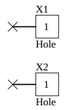

Allied Vision Technologies GmbH	Taschenweg 2a	07646 Stadtroda		Allied Vision		
Title: CSI2-WAND_Rev01			**Confidential**			
PCB:	PCBA:	3				
Author: CWA	Checked by: OFU	2				
Date: 28.11.2019	Page: 1 of 1	1				
File: CSI2-WAND_Rev01.SchDoc		No.	Changes	Rev.:	Date:	Name: