LAB 5: I2C

Part 1: Configure ADC to measure the DAC output

1.1. Objectives

- Learn how to set up the **MPU6050 (GY-521)** in STM32CubeMX.
- Display the Ax, Ay, Gx, Gy on the LCD
- Generate code in STM32CubeMX and using HAL functions.

1.2. Create the project in STM32CubeIDE

- **File** > **New** > **STM32 Project** in main panel.

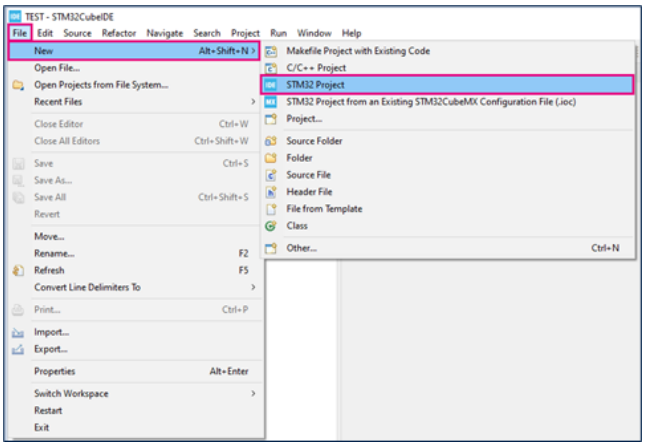

This example uses the NUCLEO-L476RG board.

- Select **NUCLEO-L476RG** board using **Board selector** as shown in the figure below:

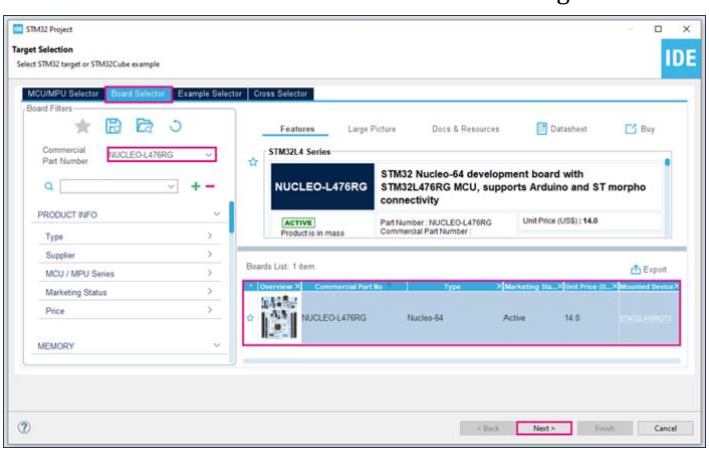

- Save the project:

1.3. Configure peripherals

1.3.1. Configure LCD

Use configuration and files from Lab4

1.3.2 Configure and connect the MPU6050 (GY-521)

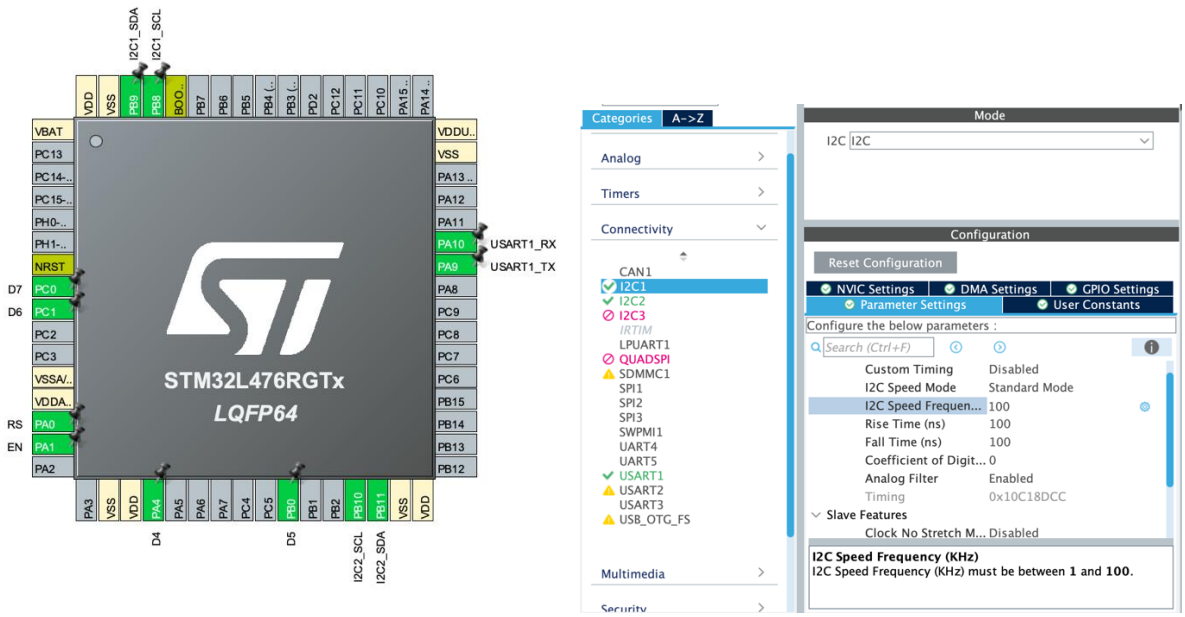

I have enabled I2C1 in the standard mode with the clock speed of 100KHz. The pins PB8 and PB9 are configured as SCL and SDA respectively.

The 7 bit address is b110100X. Here the value of X depends on the pin AD0. This pin is available on the breakout board of the sensor and since we have left it not-connected, this pin can be treated as Logic LOW. This means that the 7bit Slave Address of the device is 0x68. But we need to provide the 8bit address for the STM32 HAL, therefore we will shift this 7 bit address to the left by 1 place, 0x68<<1 = 0xD0.

Add the following to the main.c file.

```
/* Private user code ---------------------------------------------------------*/
/* USER CODE BEGIN 0 */
#define MPU6050_ADDR 0xD0


#define SMPLRT_DIV_REG 0x19
#define GYRO_CONFIG_REG 0x1B
#define ACCEL_CONFIG_REG 0x1C
#define ACCEL_XOUT_H_REG 0x3B
#define TEMP_OUT_H_REG 0x41
#define GYRO_XOUT_H_REG 0x43
#define PWR_MGMT_1_REG 0x6B
#define WHO_AM_I_REG 0x75


int16_t Accel_X_RAW = 0;
int16_t Accel_Y_RAW = 0;
int16_t Accel_Z_RAW = 0;

int16_t Gyro_X_RAW = 0;
```

```
int16_t Gyro_Y_RAW = 0;
int16_t Gyro_Z_RAW = 0;

float Ax, Ay, Az, Gx, Gy, Gz;


void MPU6050_Init (void)
{
	uint8_t check;
	uint8_t Data;

	// check device ID WHO_AM_I
	HAL_I2C_Mem_Read (&hi2c1, MPU6050_ADDR, 0x75, 1, &check, 1, 1000);
	if (check == 0x68)  // 0x68 will be returned by the sensor if everything goes well
	{
		// power management register 0X6B we should write all 0's to wake the sensor up
		Data = 0;
		HAL_I2C_Mem_Write(&hi2c1, MPU6050_ADDR, 0x6B, 1,&Data, 1, 1000);

		// Set DATA RATE of 1KHz by writing SMPLRT_DIV register
		Data = 0x07;
		HAL_I2C_Mem_Write(&hi2c1, MPU6050_ADDR, 0x19, 1, &Data, 1, 1000);

		// Set Gyroscopic configuration in GYRO_CONFIG Register
		Data = 0x00;  // XG_ST=0,YG_ST=0,ZG_ST=0, FS_SEL=0 -> ± 250°/s
		HAL_I2C_Mem_Write(&hi2c1, MPU6050_ADDR, 0x1B, 1, &Data, 1, 1000);

		// Set accelerometer configuration in ACCEL_CONFIG Register
		Data = 0x00;  // XA_ST=0,YA_ST=0,ZA_ST=0, FS_SEL=0 -> ± 2g
		HAL_I2C_Mem_Write(&hi2c1, MPU6050_ADDR, 0x1C, 1, &Data, 1, 1000);
	}

}


void MPU6050_Read_Accel (void)
{
	uint8_t Rec_Data[6];

	// Read 6 BYTES of data starting from ACCEL_XOUT_H (0x3B) register
	HAL_I2C_Mem_Read (&hi2c1, MPU6050_ADDR, 0x3B, 1, Rec_Data, 6, 1000);

	Accel_X_RAW = (int16_t)(Rec_Data[0] << 8 | Rec_Data [1]);
	Accel_Y_RAW = (int16_t)(Rec_Data[2] << 8 | Rec_Data [3]);
	Accel_Z_RAW = (int16_t)(Rec_Data[4] << 8 | Rec_Data [5]);

	/*** convert the RAW values into acceleration in 'g'
	    we have to divide according to the Full scale value set in FS_SEL
	    I have configured FS_SEL = 0. So I am dividing by 16384.0
	    for more details check ACCEL_CONFIG Register             ****/

	Ax = (float)Accel_X_RAW/16384.0;
	Ay = (float)Accel_Y_RAW/16384.0;
	Az = (float)Accel_Z_RAW/16384.0;
}


void MPU6050_Read_Gyro (void)
{
	uint8_t Rec_Data[6];

	// Read 6 BYTES of data starting from GYRO_XOUT_H register
```

```
        HAL_I2C_Mem_Read (&hi2c1, MPU6050_ADDR, 0x43, 1, Rec_Data, 6, 1000);

        Gyro_X_RAW = (int16_t)(Rec_Data[0] << 8 | Rec_Data [1]);
        Gyro_Y_RAW = (int16_t)(Rec_Data[2] << 8 | Rec_Data [3]);
        Gyro_Z_RAW = (int16_t)(Rec_Data[4] << 8 | Rec_Data [5]);

        /*** convert the RAW values into dps (°/s)
            we have to divide according to the Full scale value set in FS_SEL
            I have configured FS_SEL = 0. So I am dividing by 131.0
            for more details check GYRO_CONFIG Register             ****/

        Gx = (float)Gyro_X_RAW/131.0;
        Gy = (float)Gyro_Y_RAW/131.0;
        Gz = (float)Gyro_Z_RAW/131.0;
}
/* USER CODE END 0 */
```

Now write the main function as:

```
int main(void)
{

  /* USER CODE BEGIN 1 */
        char buf[10];
        int oldax,olday;
        int xpos=64;
        int ypos=16;
  /* USER CODE END 1 */

  /* MCU Configuration--------------------------------------------------------*/

  /* Reset of all peripherals, Initializes the Flash interface and the Systick. */
  HAL_Init();

  /* USER CODE BEGIN Init */

  /* USER CODE END Init */

  /* Configure the system clock */
  SystemClock_Config();

  /* USER CODE BEGIN SysInit */

  /* USER CODE END SysInit */

  /* Initialize all configured peripherals */
  MX_GPIO_Init();
  MX_I2C1_Init();
  /* USER CODE BEGIN 2 */
  MPU6050_Init();

  lcd_init();

  while (1)
  {
    /* USER CODE END WHILE */

    /* USER CODE BEGIN 3 */

                oldax = Ax;
                olday=Ay;
```

```
                MPU6050_Read_Accel();
                MPU6050_Read_Gyro();
                setCursor(0, 0);
                // print the Acceleration and Gyro values on the LCD 16x2

                sprintf (buf, "Ax=%.2fg ", Ax);
                lcd_send_string (buf);
                sprintf (buf, "Ay=%.2fg ", Ay);
                lcd_send_string (buf);

                setCursor(0, 1);
                sprintf (buf, "Gx=%.2f", Gx);
                lcd_send_string (buf);
                sprintf (buf, "Gy=%.2f", Gy);
                lcd_send_string (buf);

                lcd_clear();
                HAL_Delay(200);

  }
  /* USER CODE END 3 */
}
```

1.3.3 Compile and flash

- Click the **Build** button
- Click the **Run** button to run it

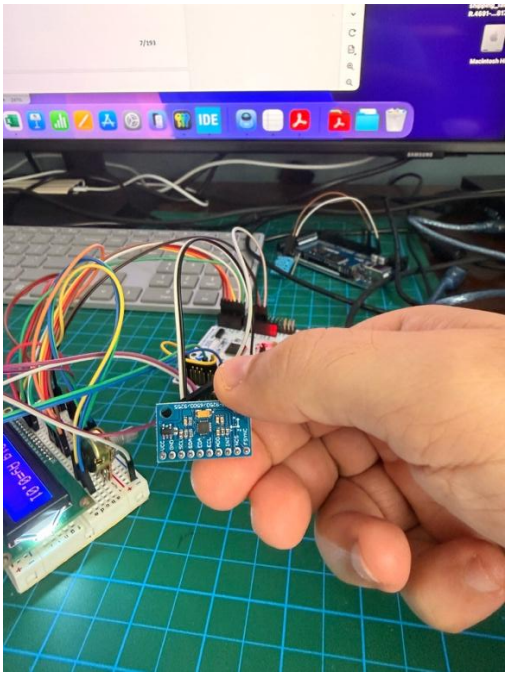

Part 2:

Objectives

- Learn How to use the OLED 1306 in STM32L476
- Display Hello Work on the OLED.

2.1.1 Create project

2.2.2 Configure the additional Pins as follows

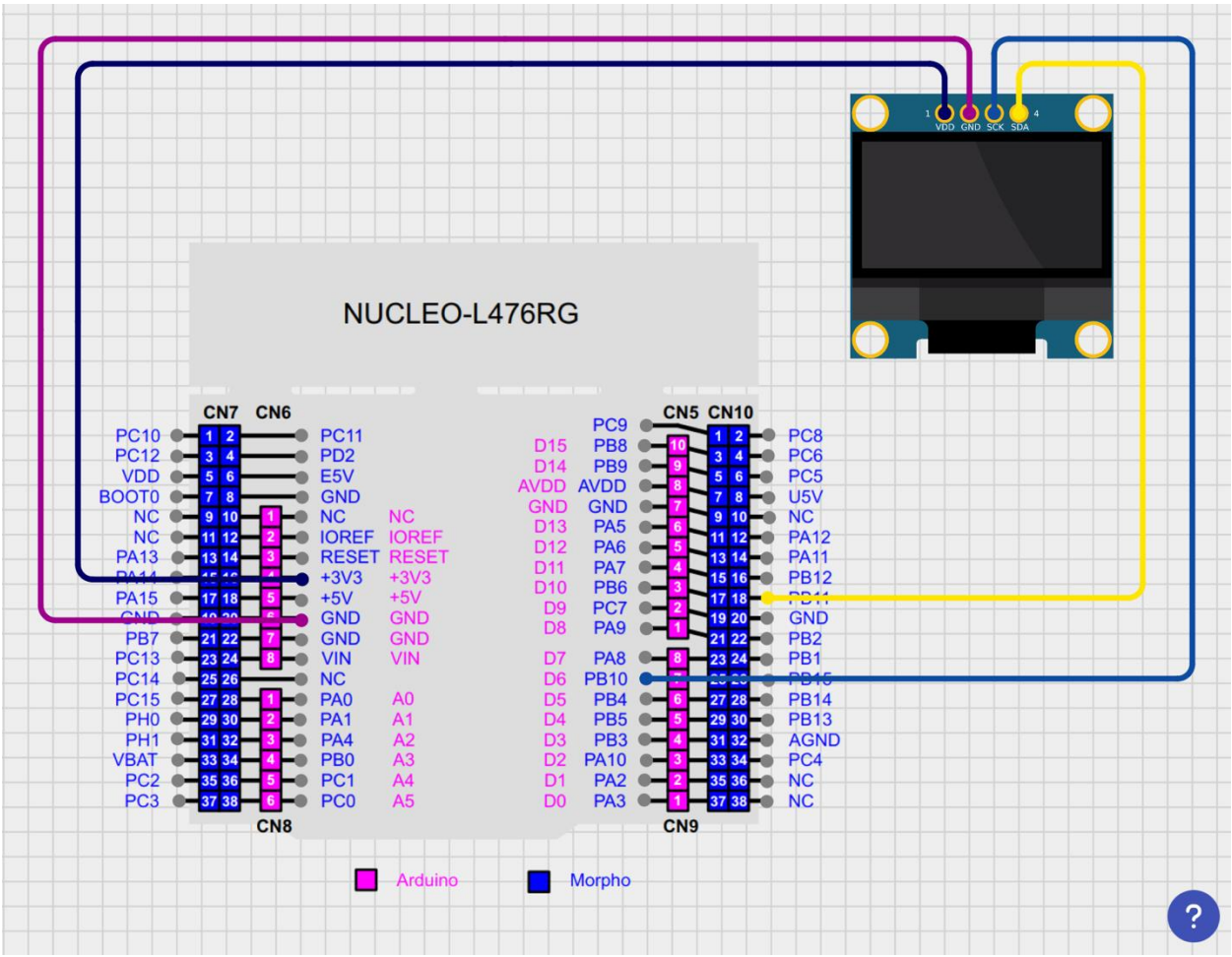

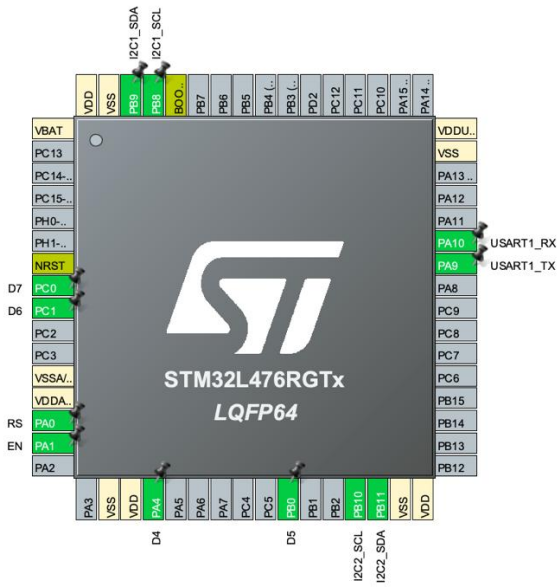

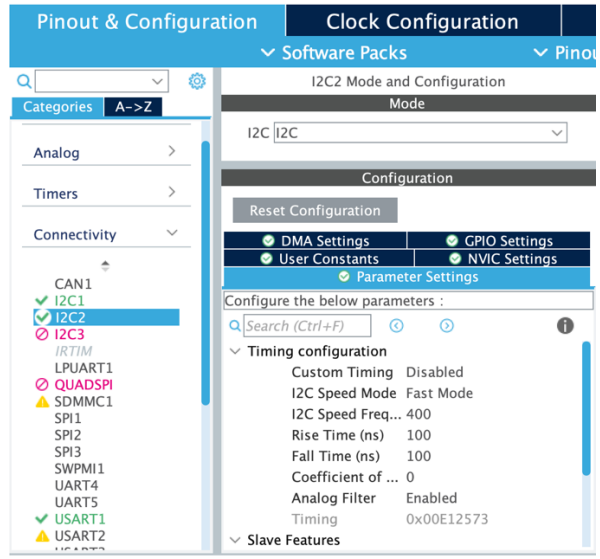

Add the following files to your project
Ssd1306.c
Ssd1306.h
Fonts.c
Fonts.h

Update your main.c to include

```
#include "ssd1306.h"
#include "fonts.h"
```

Add these lines to your main() function outside the while loop

```
SSD1306  Init (); // initialise the display
SSD1306_GotoXY (10,10); // goto 10, 10
SSD1306_Puts ("HELLO", &Font_11x18, 1); // print Hello
SSD1306  GotoXY (10, 30);
SSD1306_Puts ("WORLD !!", &Font_11x18, 1);
SSD1306_UpdateScreen(); // update screen
```

Output

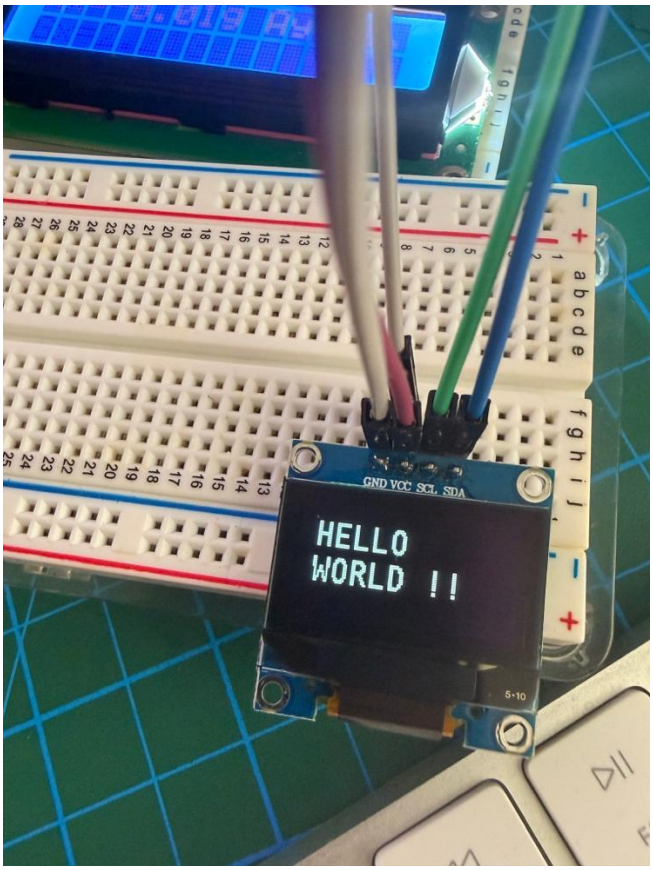

Part 3:

Objectives

- Create a simple application to move a dot on the OLED screen.
- The dot should move right, left, up and down depending on the accelerometer position.

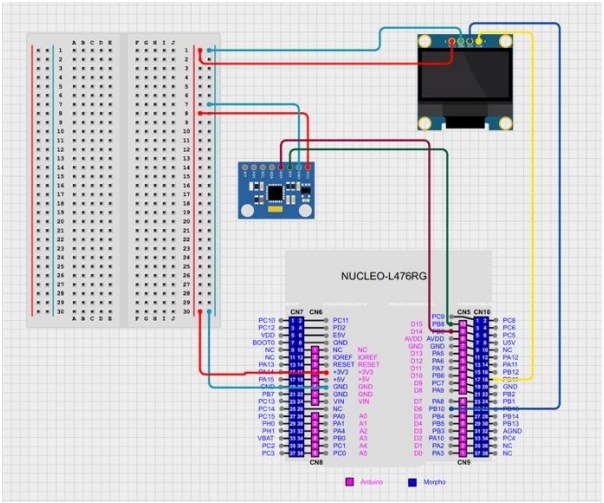

Deliverables

- Report
- Video of the 3 parts
- Project compressed file with the code for each of the 3 parts