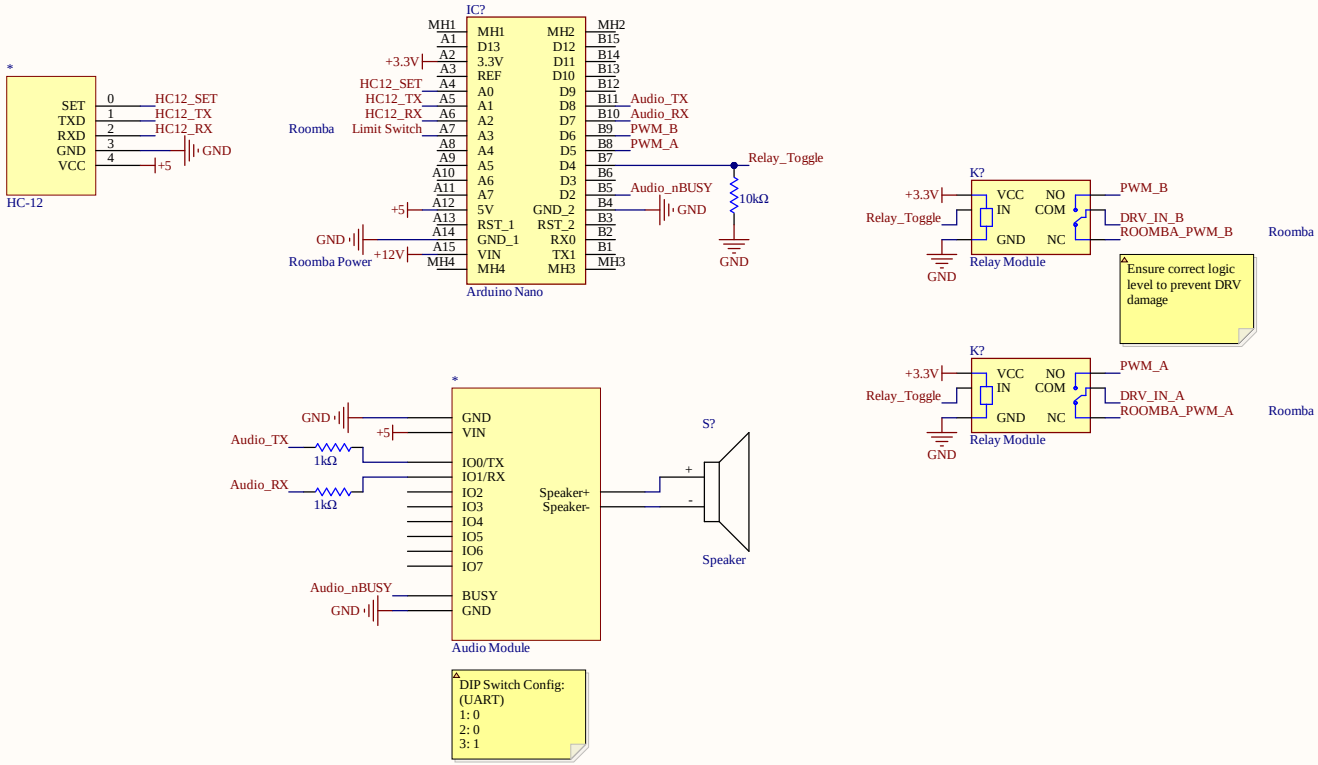

Title		
Size: Legal	Number	Revision
Date: 5/17/2022		Sheet of
File: D:\Github\..\Roomba.SchDoc		Drawn By: