USB_PWR

File: USB_PWR.kicad_sch

MCU

File: MCU.kicad_sch

TRS_ADC

File: TRS_ADC.kicad_sch

RJ45_PHY

File: RJ45_PHY.kicad_sch

Sheet: /
File: SIGMAGE.kicad_sch

Title:

Size: A4	Date:	**Rev:**
KiCad E.D.A. 9.0.6		Id: 1/5

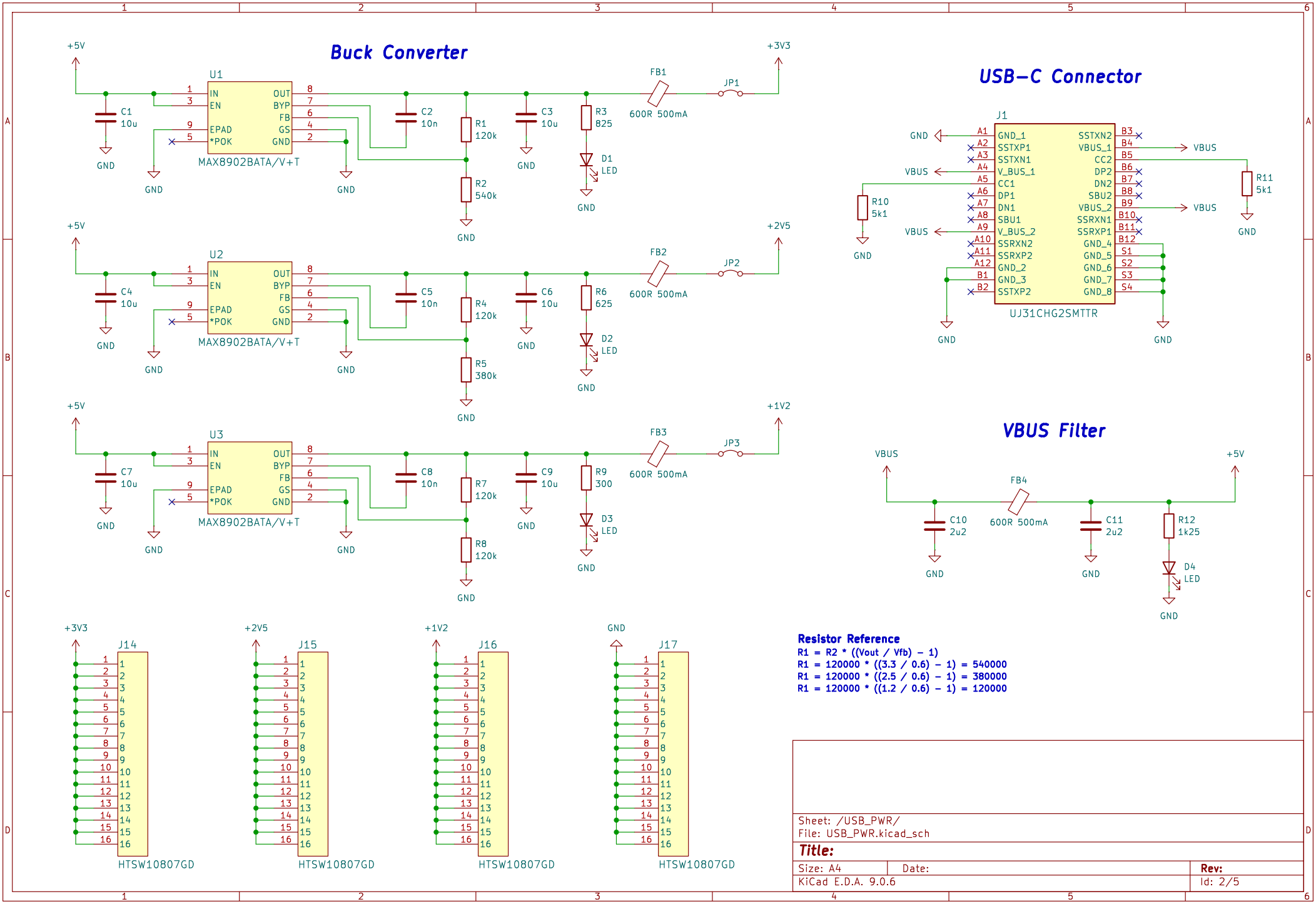
Buck Converter
U1
MAX8902BATA/V+T
IN
EN
EPAD
*POK
OUT
BYP
FB
GS
GND
+5V
+3V3
C1 10u
C2 10n
C3 10u
R1 120k
R2 540k
R3 825
D1 LED
FB1 600R 500mA
JP1
U2
MAX8902BATA/V+T
+2V5
C4 10u
C5 10n
C6 10u
R4 120k
R5 380k
R6 625
D2 LED
FB2 600R 500mA
JP2
U3
MAX8902BATA/V+T
+1V2
C7 10u
C8 10n
C9 10u
R7 120k
R8 120k
R9 300
D3 LED
FB3 600R 500mA
JP3
USB-C Connector
J1
UJ31CHG2SMTTR
GND_1
SSTXP1
SSTXN1
V_BUS_1
CC1
DP1
DN1
SBU1
V_BUS_2
SSRXN2
SSRXP2
GND_2
GND_3
SSTXP2
SSTXN2
VBUS_1
CC2
DP2
DN2
SBU2
VBUS_2
SSRXN1
SSRXP1
GND_4
GND_5
GND_6
GND_7
GND_8
VBUS
R10 5k1
R11 5k1
VBUS Filter
FB4 600R 500mA
C10 2u2
C11 2u2
R12 1k25
D4 LED
J14
J15
J16
J17
HTSW10807GD
Resistor Reference
R1 = R2 * ((Vout / Vfb) - 1)
R1 = 120000 * ((3.3 / 0.6) - 1) = 540000
R1 = 120000 * ((2.5 / 0.6) - 1) = 380000
R1 = 120000 * ((1.2 / 0.6) - 1) = 120000
Sheet: /USB_PWR/
File: USB_PWR.kicad_sch
Title:
Size: A4
Date:
Rev:
KiCad E.D.A. 9.0.6
Id: 2/5

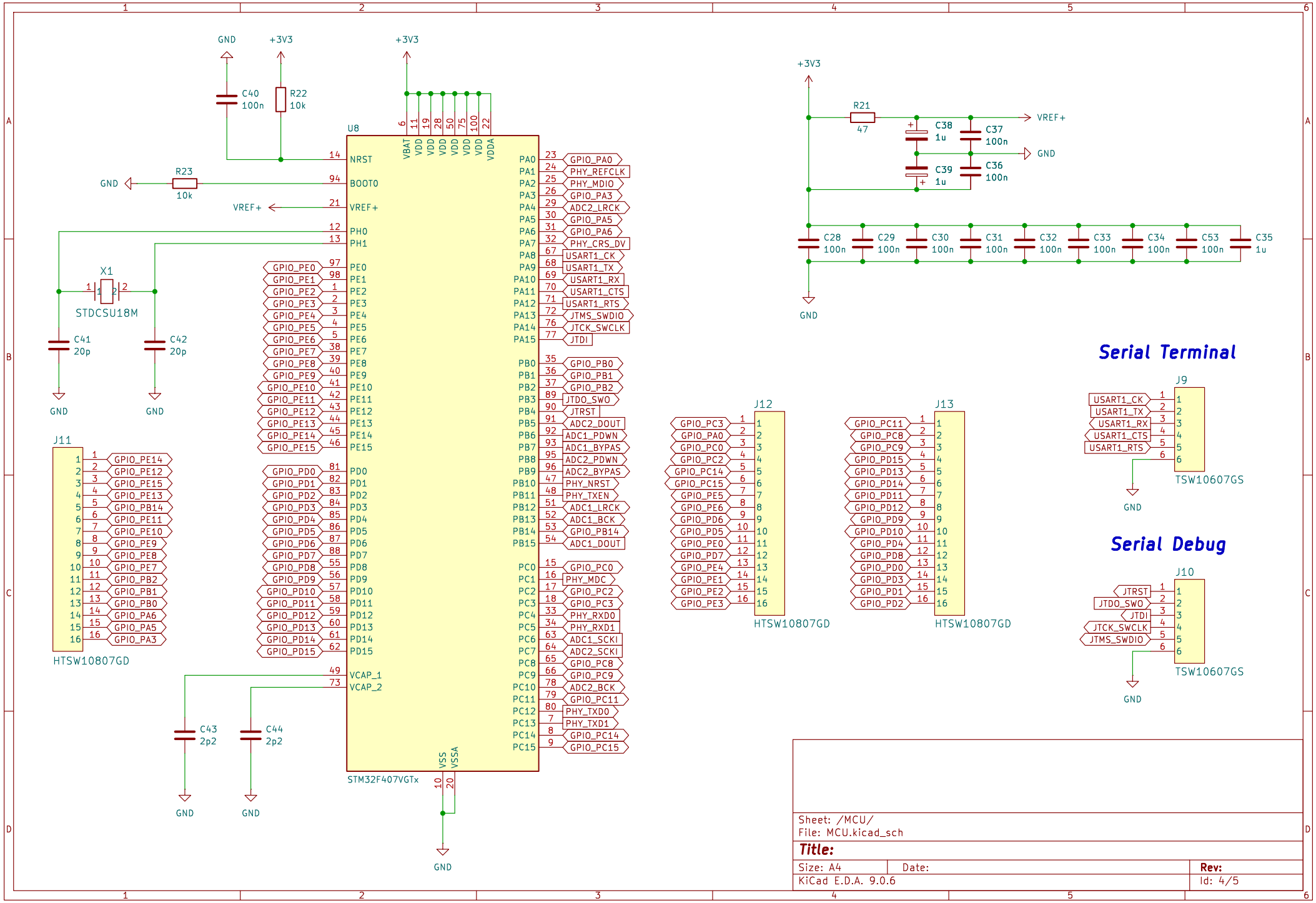

Sheet: /MCU/
File: MCU.kicad_sch

Title:

Size: A4	Date:	Rev:
KiCad E.D.A. 9.0.6		Id: 4/5

Hi-Z TRS Line In

HPF Cutoff Frequency
Fc = 1 / (2 * PI * R * C)
Fc = 1 / (2 * PI * 1000000 * 0.000001) = ~0.16Hz

LPF Cutoff Frequency
Fc = 1 / (2 * PI * R * C)
Fc = 1 / (2 * PI * 100 * 0.000000001) = ~16kHz

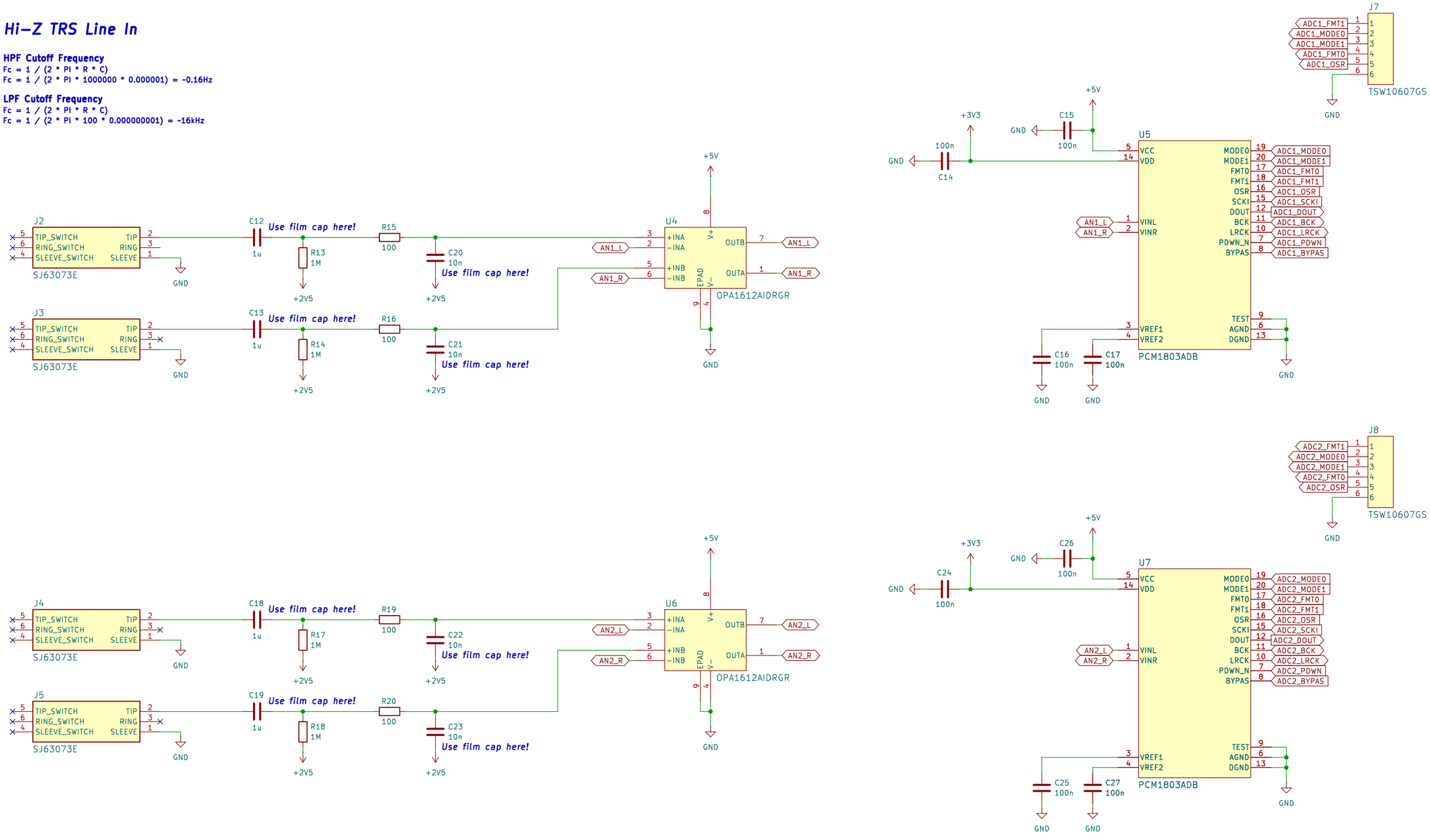

Sheet: /TRS_ADC/
File: TRS_ADC.kicad_sch

Title:

Size: A3	Date:	Rev:
KiCad E.D.A. 9.0.6		Id: 5/5

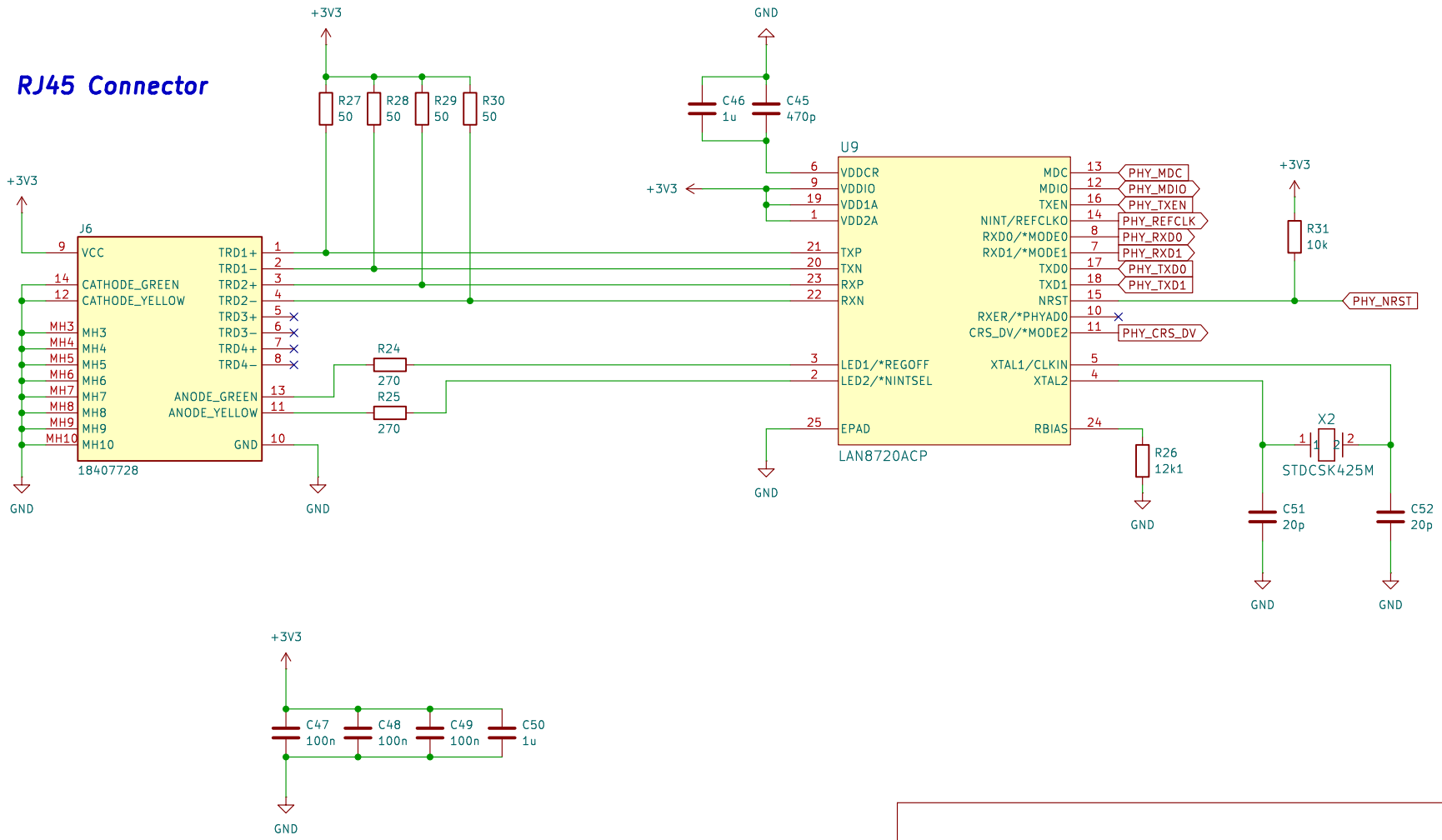

Sheet: /RJ45_PHY/
File: RJ45_PHY.kicad_sch

Title:

Size: A4	Date:	Rev:
KiCad E.D.A. 9.0.6		Id: 5/5