USB_PWR

File: USB_PWR.kicad_sch

MCU

File: MCU.kicad_sch

TRS_ADC

File: TRS_ADC.kicad_sch

RJ45_PHY

File: RJ45_PHY.kicad_sch

Sheet: /
File: SIGMAGE.kicad_sch

Title:

Size: A4	Date:	**Rev:**
KiCad E.D.A. 9.0.6		Id: 1/5

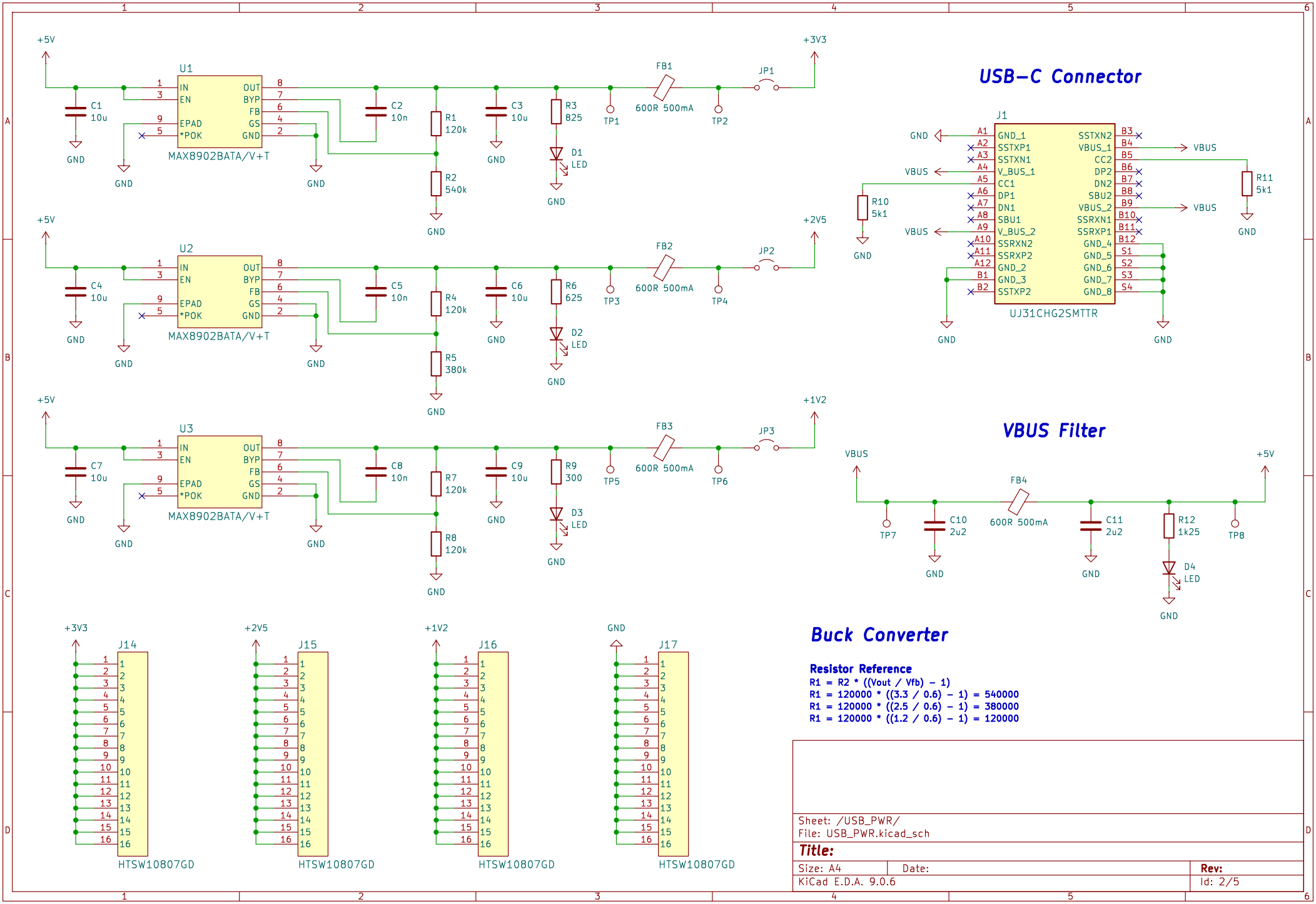
USB-C Connector
VBUS Filter
Buck Converter
Resistor Reference
R1 = R2 * ((Vout / Vfb) - 1)
R1 = 120000 * ((3.3 / 0.6) - 1) = 540000
R1 = 120000 * ((2.5 / 0.6) - 1) = 380000
R1 = 120000 * ((1.2 / 0.6) - 1) = 120000
U1
U2
U3
MAX8902BATA/V+T
J1
UJ31CHG2SMTTR
J14
J15
J16
J17
HTSW10807GD
+5V
+3V3
+2V5
+1V2
GND
VBUS
FB1
FB2
FB3
FB4
600R 500mA
JP1
JP2
JP3
TP1
TP2
TP3
TP4
TP5
TP6
TP7
TP8
C1 10u
C2 10n
C3 10u
C4 10u
C5 10n
C6 10u
C7 10u
C8 10n
C9 10u
C10 2u2
C11 2u2
R1 120k
R2 540k
R3 825
R4 120k
R5 380k
R6 625
R7 120k
R8 120k
R9 300
R10 5k1
R11 5k1
R12 1k25
D1 LED
D2 LED
D3 LED
D4 LED
Sheet: /USB_PWR/
File: USB_PWR.kicad_sch
Title:
Size: A4
Date:
Rev:
KiCad E.D.A. 9.0.6
Id: 2/5

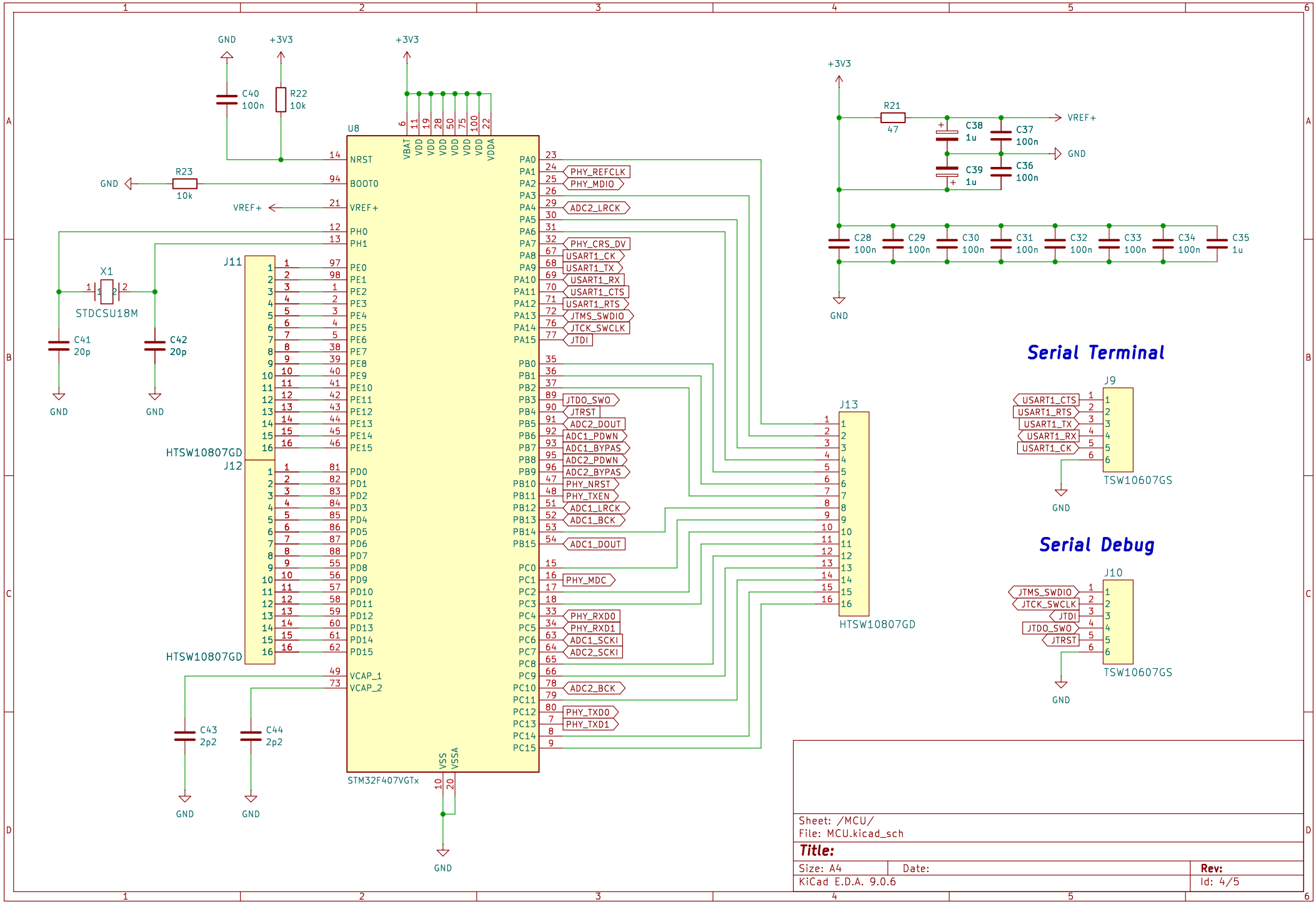

Sheet: /MCU/
File: MCU.kicad_sch

Title:

Size: A4	Date:	Rev:
KiCad E.D.A. 9.0.6		Id: 4/5

Hi-Z TRS Line In

HPF Cutoff Frequency
Fc = 1 / (2 * PI * R * C)
Fc = 1 / (2 * PI * 1000000 * 0.000001) = ~0.16Hz

LPF Cutoff Frequency
Fc = 1 / (2 * PI * R * C)
Fc = 1 / (2 * PI * 100 * 0.000000001) = ~16kHz

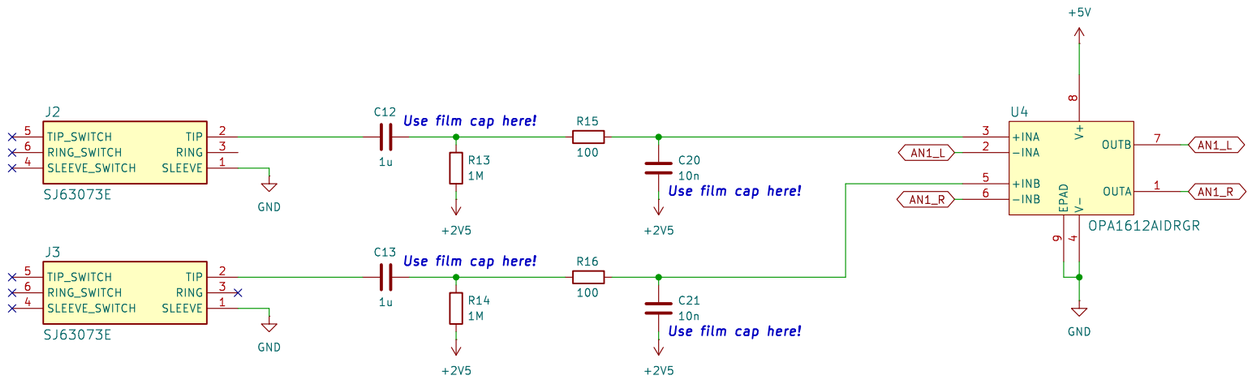

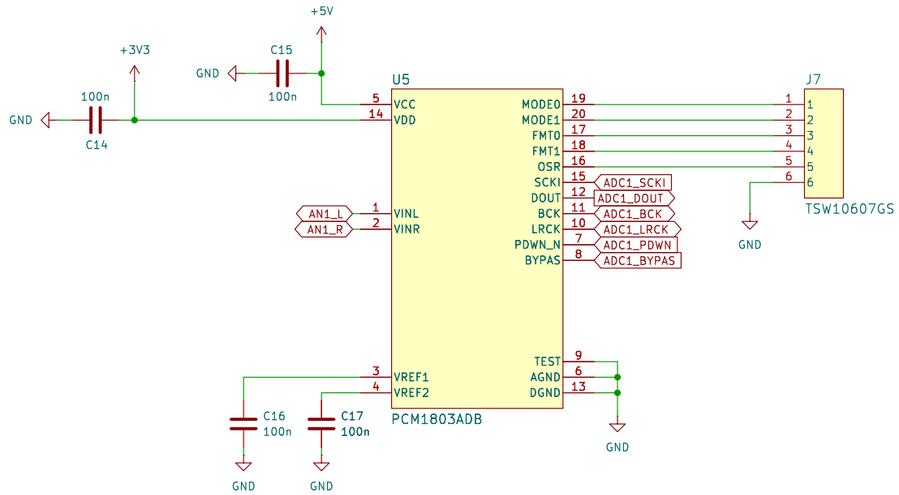

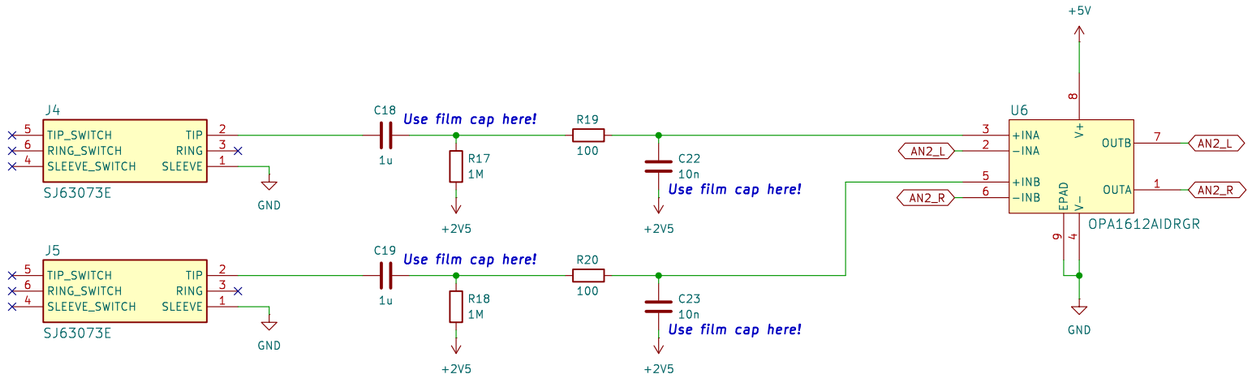

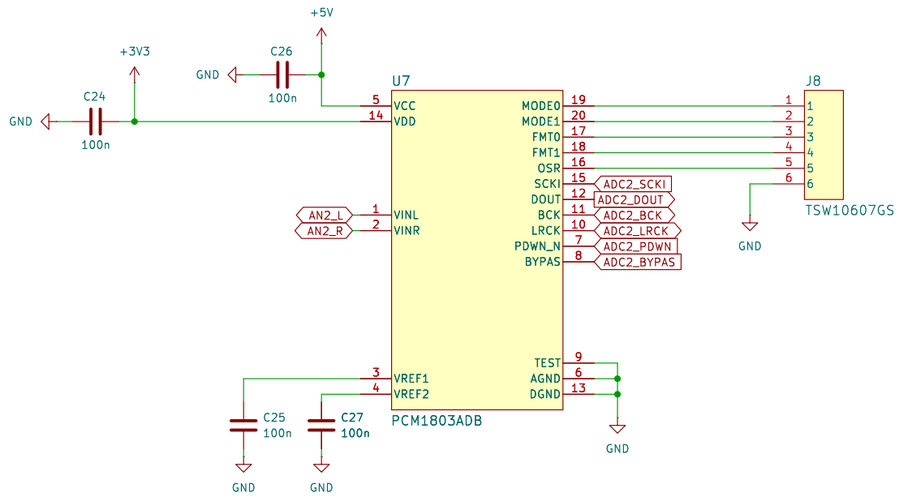

Sheet: /TRS_ADC/
File: TRS_ADC.kicad_sch

Title:

Size: A3	Date:	Rev:
KiCad E.D.A. 9.0.6		Id: 5/5

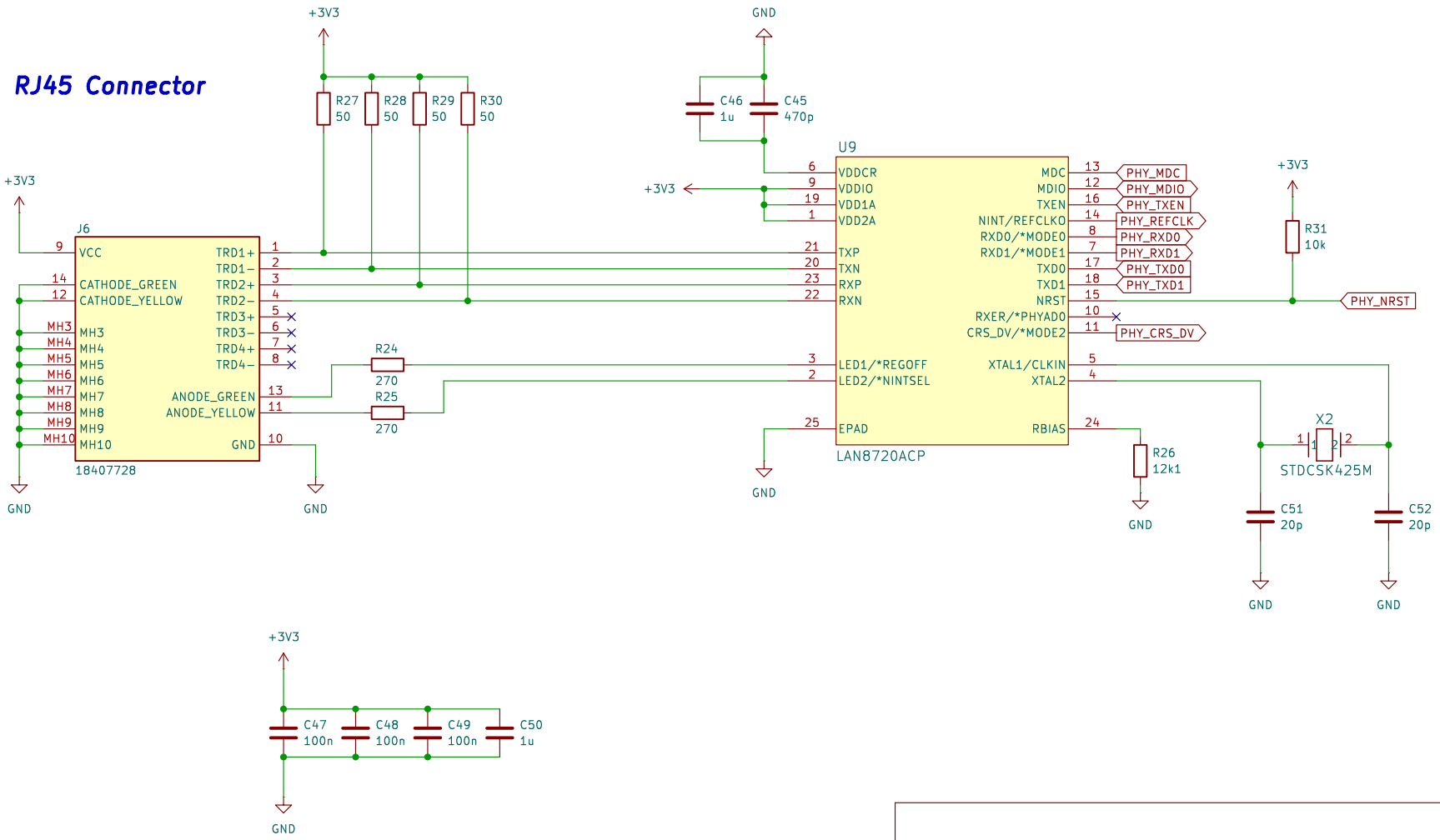

Sheet: /RJ45_PHY/
File: RJ45_PHY.kicad_sch

Title:

Size: A4	Date:	Rev:
KiCad E.D.A. 9.0.6		Id: 5/5