USB_PWR

File: USB_PWR.kicad_sch

CONNECTOR

File: CONNECTOR.kicad_sch

Sheet: /
File: SIGMAGE.kicad_sch

Title:

Size: A4	Date:	**Rev:**
KiCad E.D.A. 9.0.6		Id: 1/3

Buck Converter

Resistor Reference
R1 = R2 * ((Vout / Vfb) - 1)
R1 = 120000 * ((3.3 / 0.6) - 1) = 540000
R1 = 120000 * ((2.5 / 0.6) - 1) = 380000
R1 = 120000 * ((1.2 / 0.6) - 1) = 120000

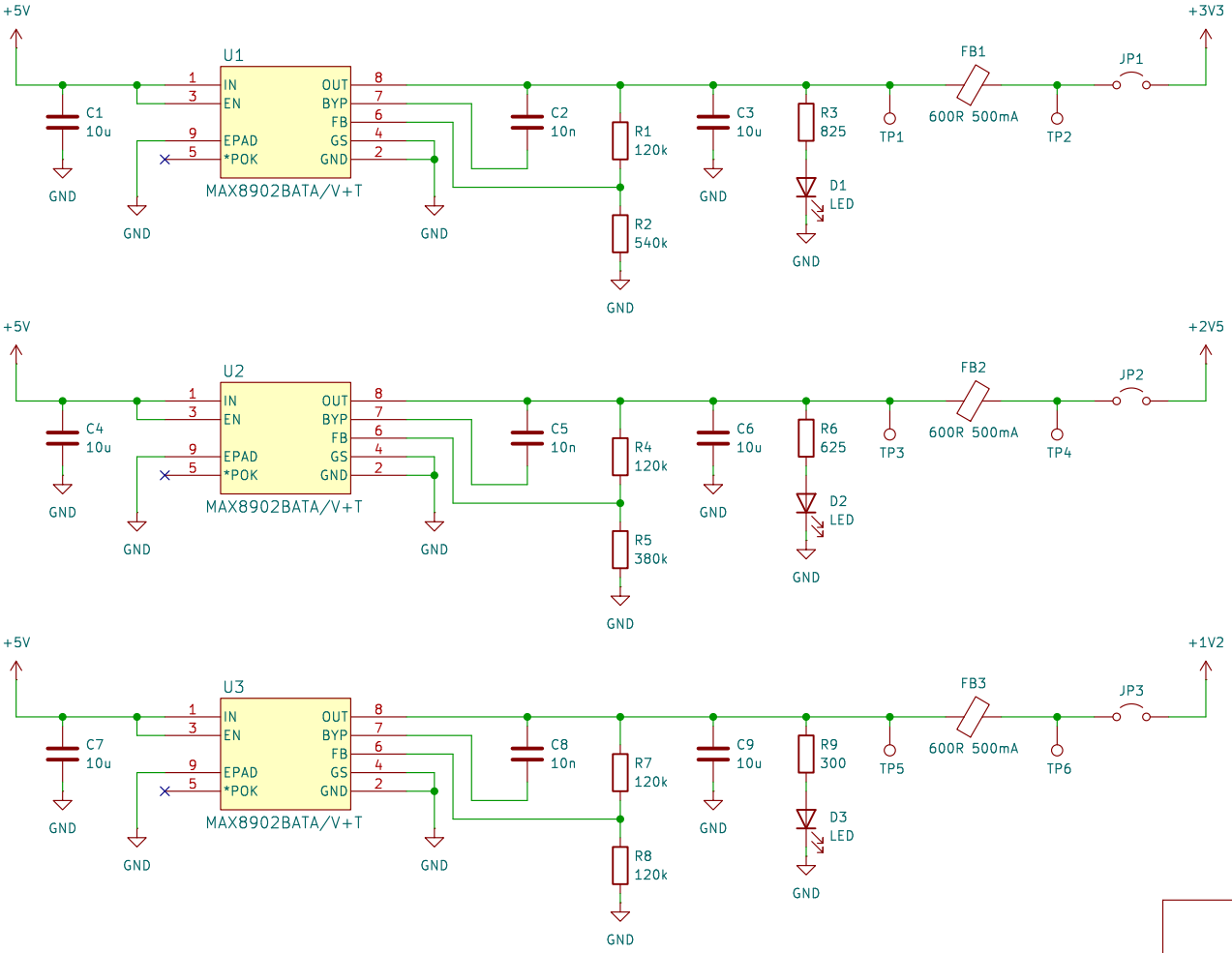

USB-C Connector

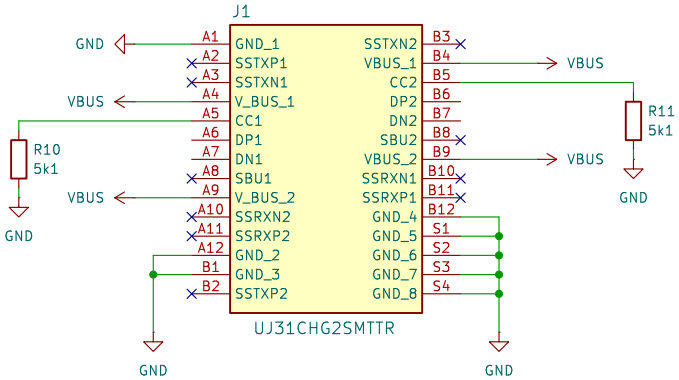

VBUS Filter

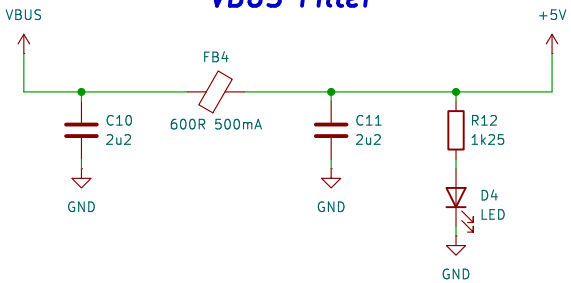

Sheet: /USB_PWR/
File: USB_PWR.kicad_sch

Title:

Size: A4	Date:	Rev:
KiCad E.D.A. 9.0.6		Id: 2/3

Hi-Z TRS Line In

HPF Cutoff Frequency
Fc = 1 / (2 * PI * R * C)
Fc = 1 / (2 * PI * 1000000 * 0.000001) = ~0.16Hz

LPF Cutoff Frequency
Fc = 1 / (2 * PI * R * C)
Fc = 1 / (2 * PI * 100 * 0.000000001) = ~16kHz

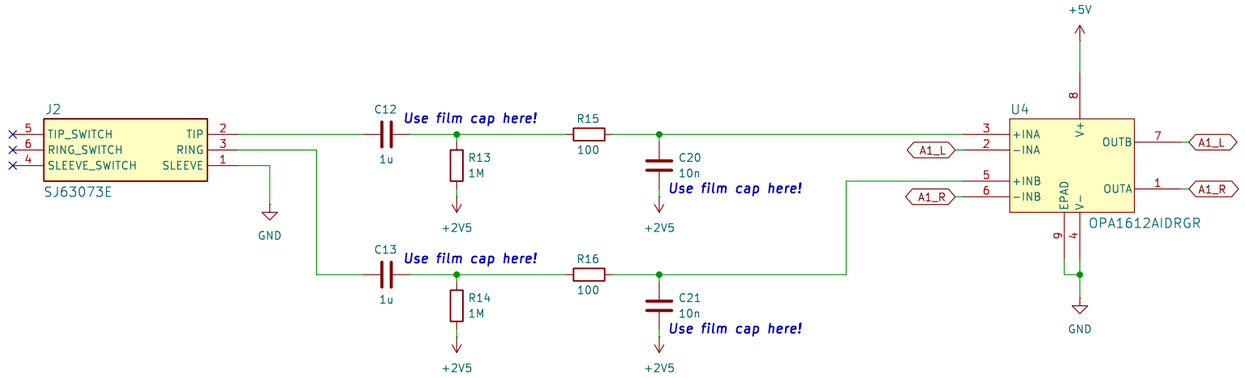

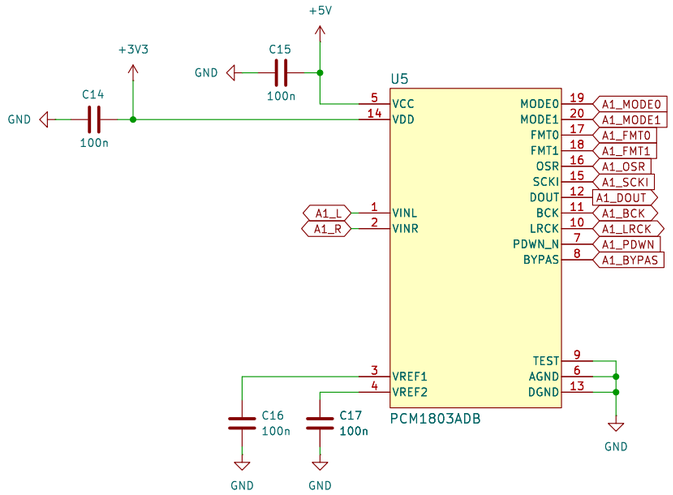

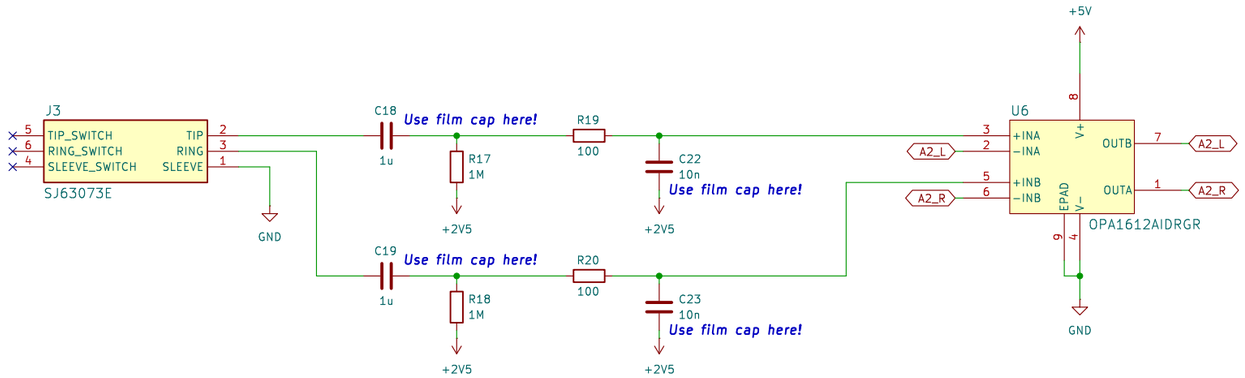

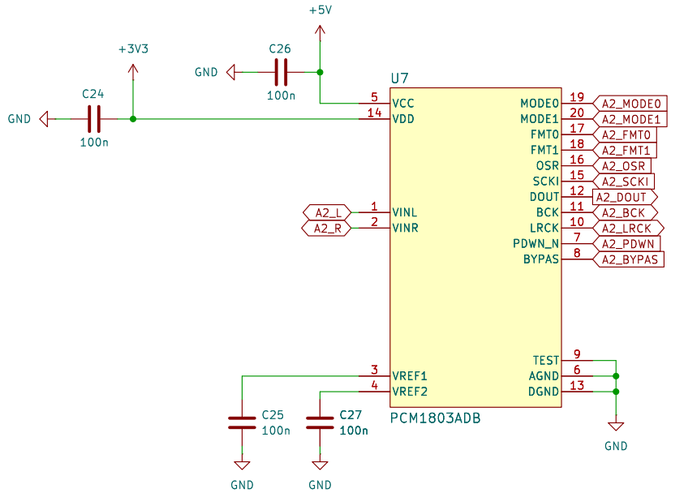

Sheet: /CONNECTOR/
File: CONNECTOR.kicad_sch

Title:

Size: A3	Date:	Rev:
KiCad E.D.A. 9.0.6		Id: 3/3