USB_PWR

File: USB_PWR.kicad_sch

MCU

File: MCU.kicad_sch

TRS_ADC

File: TRS_ADC.kicad_sch

RJ45_PHY

File: RJ45_PHY.kicad_sch

Sheet: /
File: SIGMAGE.kicad_sch

Title:

Size: A4	Date:	**Rev:**
KiCad E.D.A. 9.0.6		Id: 1/5

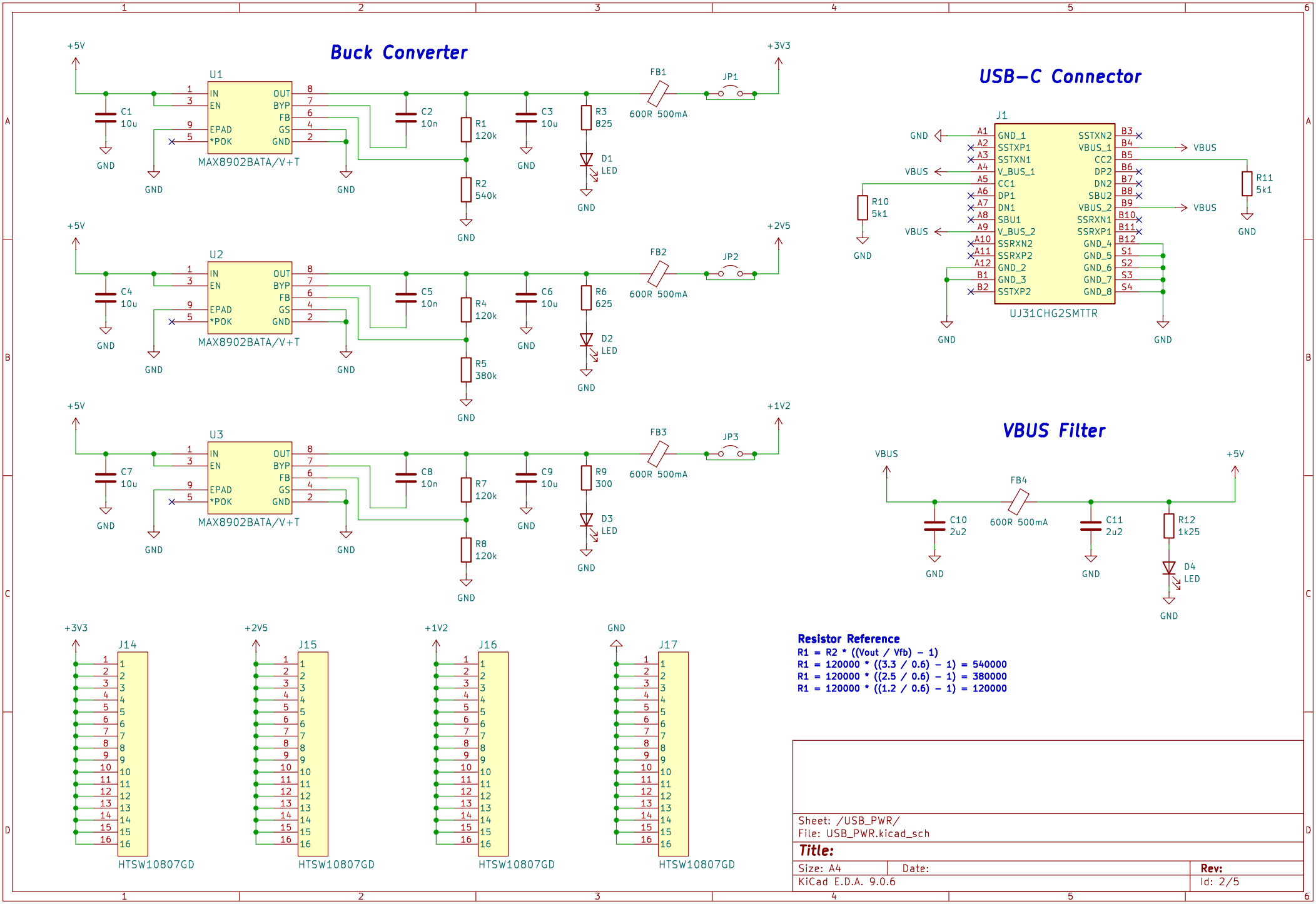
Buck Converter
U1
MAX8902BATA/V+T
IN
EN
EPAD
*POK
OUT
BYP
FB
GS
GND
+5V
+3V3
C1 10u
C2 10n
C3 10u
R1 120k
R2 540k
R3 825
D1 LED
FB1 600R 500mA
JP1
U2
MAX8902BATA/V+T
+2V5
C4 10u
C5 10n
C6 10u
R4 120k
R5 380k
R6 625
D2 LED
FB2 600R 500mA
JP2
U3
MAX8902BATA/V+T
+1V2
C7 10u
C8 10n
C9 10u
R7 120k
R8 120k
R9 300
D3 LED
FB3 600R 500mA
JP3
USB-C Connector
J1
UJ31CHG2SMTTR
GND_1
SSTXP1
SSTXN1
V_BUS_1
CC1
DP1
DN1
SBU1
V_BUS_2
SSRXN2
SSRXP2
GND_2
GND_3
SSTXP2
SSTXN2
VBUS_1
CC2
DP2
DN2
SBU2
VBUS_2
SSRXN1
SSRXP1
GND_4
GND_5
GND_6
GND_7
GND_8
VBUS
R10 5k1
R11 5k1
VBUS Filter
FB4 600R 500mA
C10 2u2
C11 2u2
R12 1k25
D4 LED
J14
J15
J16
J17
HTSW10807GD
Resistor Reference
R1 = R2 * ((Vout / Vfb) - 1)
R1 = 120000 * ((3.3 / 0.6) - 1) = 540000
R1 = 120000 * ((2.5 / 0.6) - 1) = 380000
R1 = 120000 * ((1.2 / 0.6) - 1) = 120000
Sheet: /USB_PWR/
File: USB_PWR.kicad_sch
Title:
Size: A4
Date:
Rev:
KiCad E.D.A. 9.0.6
Id: 2/5

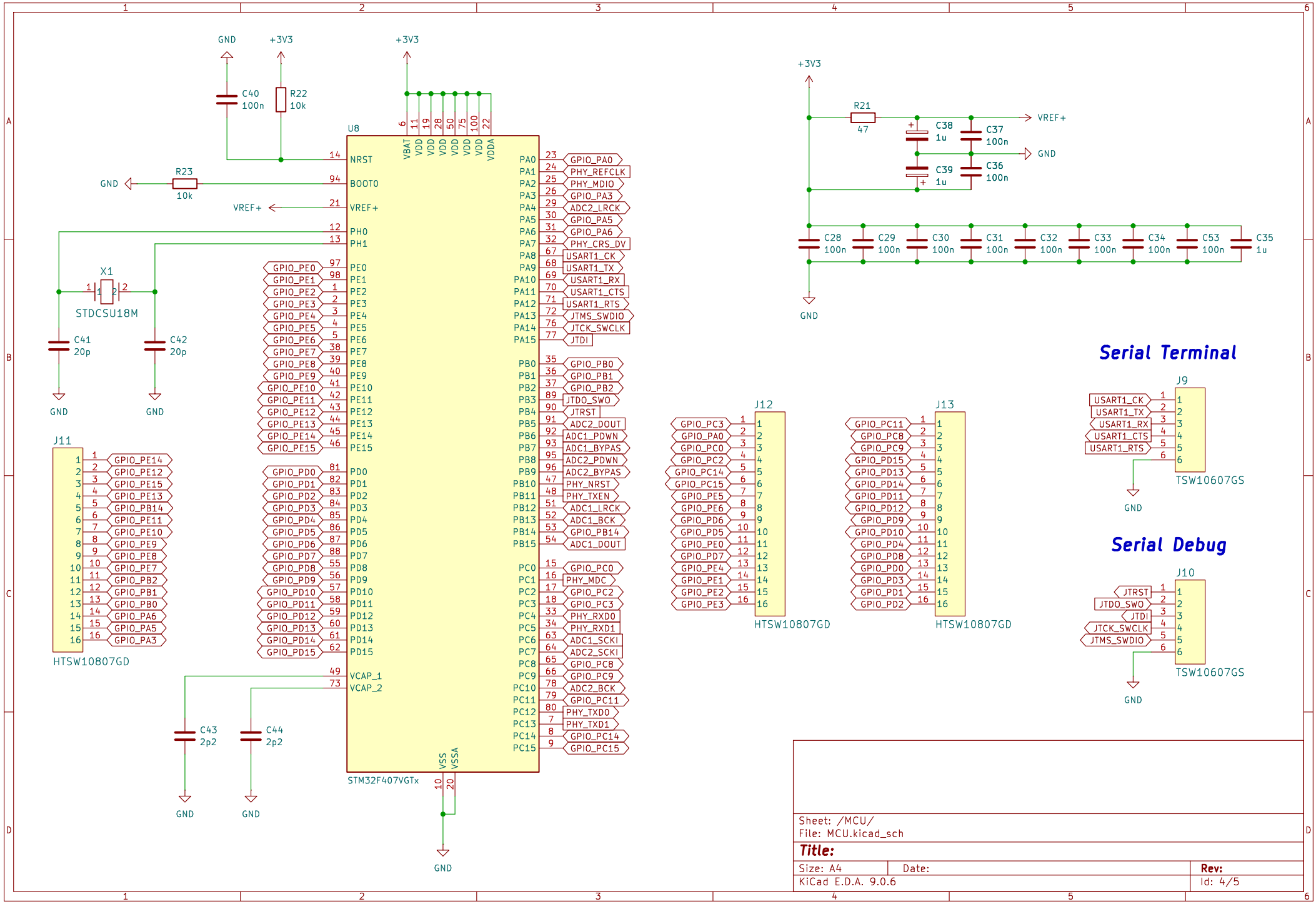
U8
STM32F407VGTx
NRST
BOOT0
VREF+
PH0
PH1
PE0
PE1
PE2
PE3
PE4
PE5
PE6
PE7
PE8
PE9
PE10
PE11
PE12
PE13
PE14
PE15
PD0
PD1
PD2
PD3
PD4
PD5
PD6
PD7
PD8
PD9
PD10
PD11
PD12
PD13
PD14
PD15
VCAP_1
VCAP_2
VBAT
VDD
VDDA
VSS
VSSA
PA0
PA1
PA2
PA3
PA4
PA5
PA6
PA7
PA8
PA9
PA10
PA11
PA12
PA13
PA14
PA15
PB0
PB1
PB2
PB3
PB4
PB5
PB6
PB7
PB8
PB9
PB10
PB11
PB12
PB13
PB14
PB15
PC0
PC1
PC2
PC3
PC4
PC5
PC6
PC7
PC8
PC9
PC10
PC11
PC12
PC13
PC14
PC15
GND
+3V3
C40
100n
R22
10k
R23
10k
X1
STDCSU18M
C41
20p
C42
20p
C43
2p2
C44
2p2
J11
HTSW10807GD
J12
HTSW10807GD
J13
HTSW10807GD
R21
47
C38
1u
C37
100n
C39
1u
C36
100n
VREF+
C28
100n
C29
100n
C30
100n
C31
100n
C32
100n
C33
100n
C34
100n
C53
100n
C35
1u
Serial Terminal
J9
TSW10607GS
USART1_CK
USART1_TX
USART1_RX
USART1_CTS
USART1_RTS
Serial Debug
J10
TSW10607GS
JTRST
JTDO_SWO
JTDI
JTCK_SWCLK
JTMS_SWDIO
Sheet: /MCU/
File: MCU.kicad_sch
Title:
Size: A4
Date:
Rev:
KiCad E.D.A. 9.0.6
Id: 4/5

Hi-Z TRS Line In

HPF Cutoff Frequency
Fc = 1 / (2 * PI * R * C)
Fc = 1 / (2 * PI * 1000000 * 0.000001) = ~0.16Hz

LPF Cutoff Frequency
Fc = 1 / (2 * PI * R * C)
Fc = 1 / (2 * PI * 100 * 0.000000001) = ~16kHz

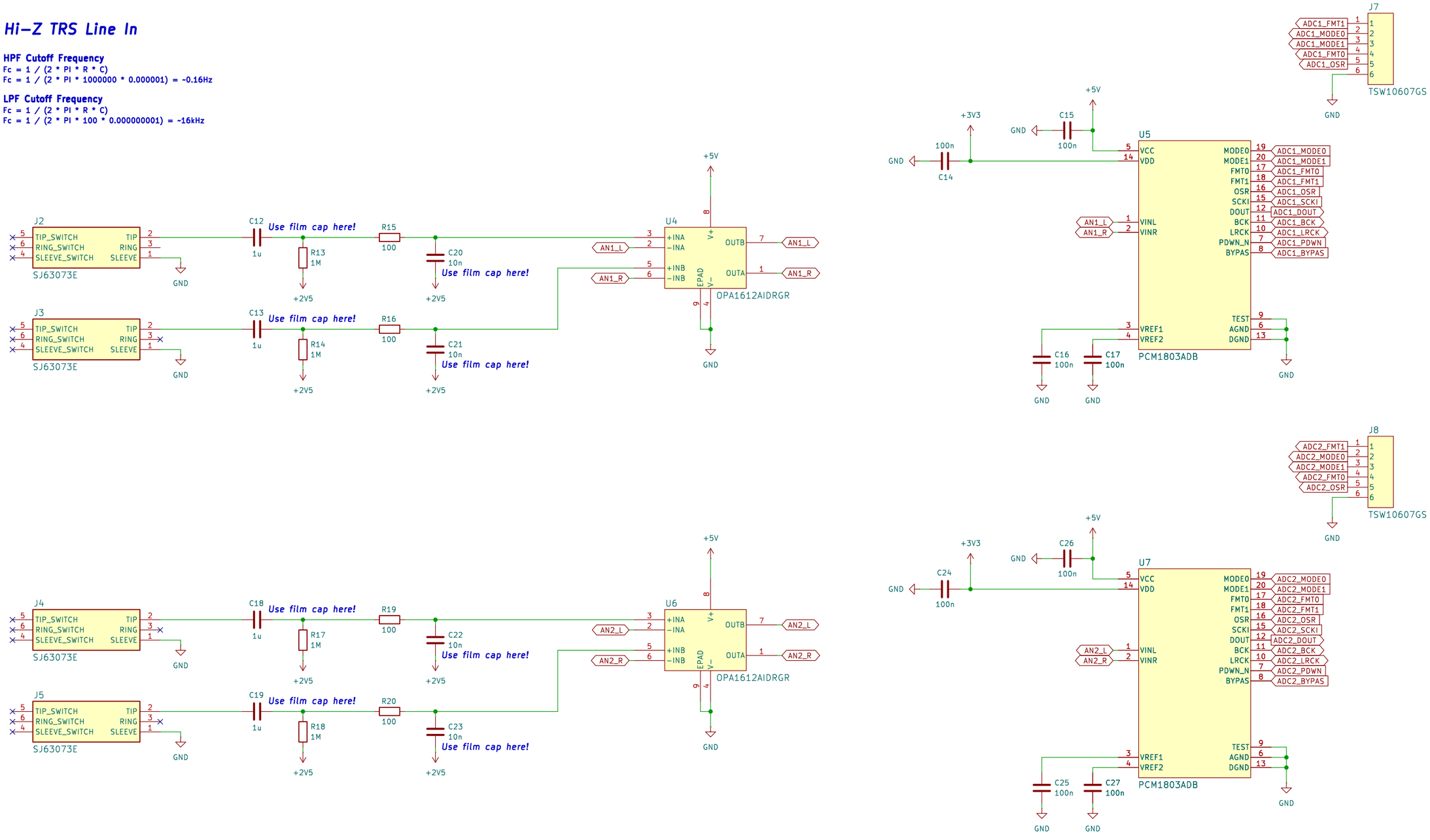

Sheet: /TRS_ADC/
File: TRS_ADC.kicad_sch

Title:

Size: A3	Date:	Rev:
KiCad E.D.A. 9.0.6		Id: 5/5

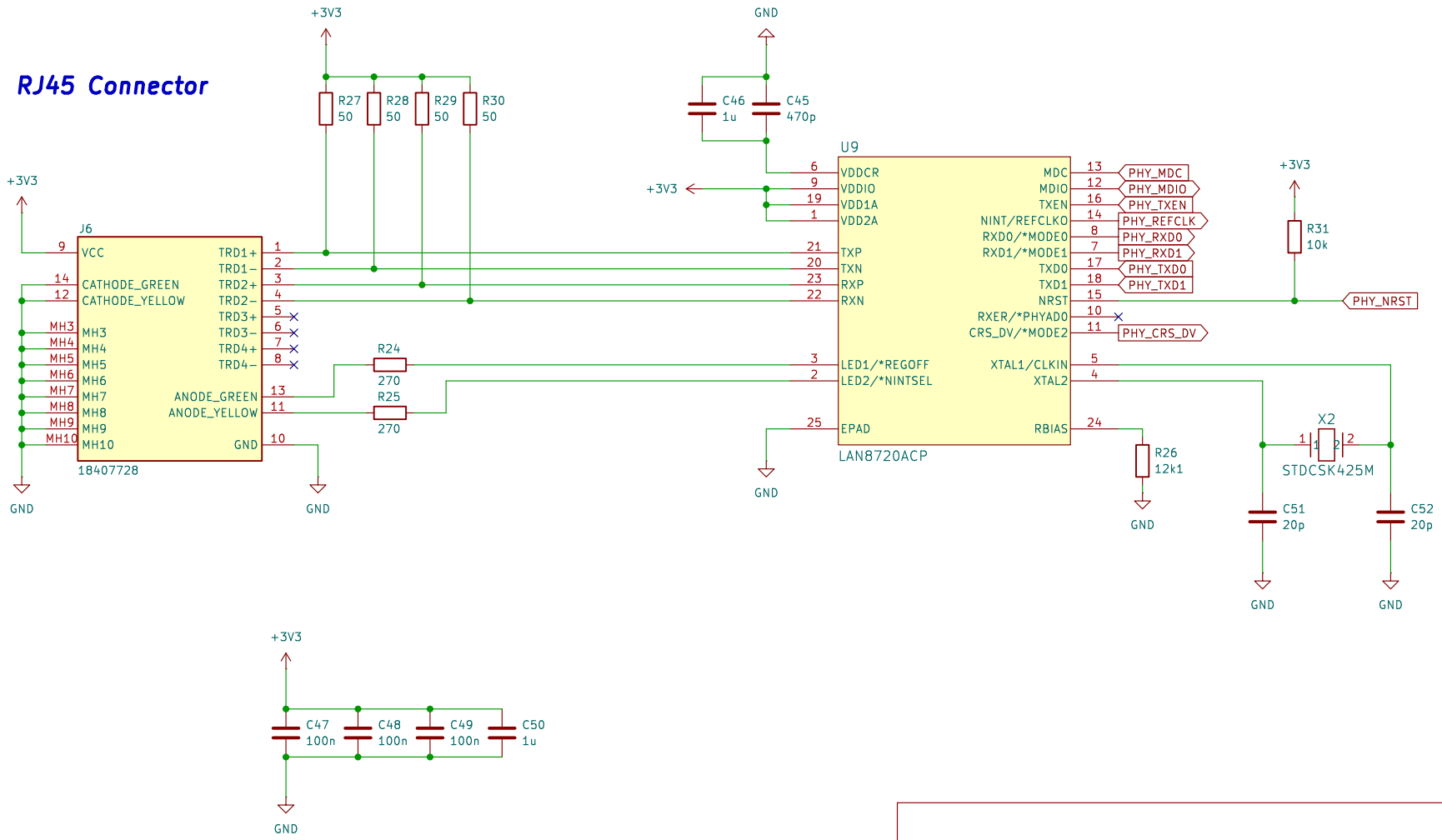

Sheet: /RJ45_PHY/
File: RJ45_PHY.kicad_sch

Title:

Size: A4	Date:	Rev:
KiCad E.D.A. 9.0.6		Id: 5/5