STUDER

A810

OPERATING AND SERVICE INSTRUCTIONS

SECTION 1	GENERAL REFERENCES	A810 3

Quick-reference description, machine types, options, accessories and service aids, technical data, maintenance hints for the service personnel

SECTION 2	STARTUP PROCEDURES

Installation, putting into operation, quick-reference operating instructions

SECTION 3	POWER SUPPLY, TAPE TRANSPORT CONTROL

Functional description, dismantling of tape transport assemblies, mechanical and electrical adjustments, circuit description and control of tape transport

SECTION 4	AUDIO

Circuit description, calibration, adjustments to audio assemblies, programming the operating parameters

SECTION 5	GENERAL DIAGRAMS

General diagrams (power supply and control logic), explanation to wiring lists and signal names, wiring lists (STUDER WIRING)

SECTION 6	TAPE TRANSPORT DIAGRAMS

SECTION 7	AUDIO DIAGRAMS

SECTION 8	SPARE PARTS LISTS

Exploded views, spare parts lists

SECTION 9	APPENDIX

Other STUDER products

SECTION 1 GENERAL REFERENCES

1.1	QUICK-REFERENCE DESCRIPTION	1/1
1.2	STANDARD VERSIONS	1/3
1.3	OPTIONS	1/7
1.4	ACCESSORIES	1/8
1.5	TECHNICAL SPECIFICATIONS	1/10
1.5.1	Dimensions	1/16
1.5.2	Packing	1/18
1.5.3	Level diagrams	1/19
1.6	STANDARD CALIBRATION VALUES	1/20
1.7	MAINTENANCE HINTS FOR THE SERVICE PERSONNEL	1/21
1.7.1	Abbreviations	1/21
1.7.2	Powers of 10	1/22
1.7.3	Code letters and colors	1/22
1.7.4	Electrostatically sensitive semiconductor devices	1/24

1. GENERAL REFERENCES

1.1 QUICK-REFERENCE DESCRIPTION

By virtue of its compact and highly rigid construction, its inherent system flexibility, and the superior operating convenience achieved by the microprocessor control system, the STUDER A810 tape recorder is universally suited for applications in broadcasting or television, for use in studios or on OB vans, in theaters, film studios, and scientific institutes.

Some of its outstanding features include:

- Highly rigid, die-cast aluminum alloy chassises for tape transport, head-block assembly, pressure roller assembly, and other assemblies.

- Manually manipulatable head shield above record and reproduce heads; can stay closed during spooling.

- Capstan motor servo control with quartz-controlled reference and capacitative sensing tacho system for highly accurate tape speeds.

- Gentle tape handling is ensured by electronically controlled tape tension, servo-controlled AC spooling motors, and non-contacting tape tension sensors. Pulse-width-modulated spooling motor control minimizes power dissipation and requires no separate heat sinking.

- Accurate electronic tape timer with real-time display; photoelectric scanning of guide roller rotation by opto switches.

- Convenient editing: four spooling speeds; the high end of the reproduce frequency response is de-emphasized for speaker protection; tape lift during spooling can be defeated either by pressing a button or mechanically by shifting the pressure roller.
  Blocked tape tension sensors and decreased braking torque in STOP mode.
  A tape marker and built-in tape scissors are available as options.

- Monitor speaker built into tape transport cover (except console version).

The high system flexibility means that a suitable A810 version is available for any type of application:

- Standard types in mono, 2-channel or stereo versions, with or without VU-meter panel.

- Operates in any position from horizontal to vertical, suited for 19" rack or console mounting. Available as a box-mounted model with removable lid or portable model with lateral handles or wooden side panels with handles.

- LS versions:
  2 of the 3 available tape speeds (3.75 - 7.5 - 15 ips) are selectable at the front panel. Standard setting: 7.5/15 ips.
- HS versions:
  4 speeds (3.75, 7.5, 15, and 30 ips) selectable at the front panel with rotary switch. The time code channel is inoperative at 3.75 ips.

- Inputs and outputs balanced and floating, available with or without input/output transformers.

- Switch for NAB or CCIR equalization (7.5 and 15 ips).

- Tape bias switch for two tape formulations with different calibration data.

- Sync facility, zerolocator, and 4-address transferlocator (autolocator) included as standard features.

- Output selector buttons: INP (input), REP (reproduce) and SYNC.

- VU-meter panel with SAFE/READY switch, record and reproduce level controls, buttons for bypassing the level controls (calibrated, with line level).
  Internally switchable level meter: VU or PPM indication.

- Selectable line voltage: 100, 120, 140, 200, 220, 240 VAC ±10%, 50...60 Hz.

- Terminals for connecting fader start, parallel remote control and varispeed control.

- VU-meter panel with SAFE/READY switch, record and reproduce level controls, buttons for bypassing the level controls (calibrated, with line level).
  Internally switchable level meter: VU or PPM indication.

- Selectable line voltage: 100, 120, 140, 200, 220, 240 VAC ±10%, 50...60 Hz.

- Terminals for connecting fader start, parallel remote control and varispeed control.

The following features are available as options:

- For synchronizing: time code system for 2-channel or stereo models; code channel as third track between the stereo audio channels.

- Mono/stereo switch for stereo and 2-channel recoder.

- Test generator (60, 125 Hz, 1, 10, 16 kHz)

- Serial remote port: for copying the audio parameters (e.g. on the audio tape), for quick audio set-up or for controlling the recorder from a terminal (RS 232 interface). An interface for the STUDIO bus (SMPTE bus) is in development.

Maximum operating convenience through bilt-in microprocessor:

- After the recorder has been switched off, the last operating parameters are automatically memorized: tape timer content, locator addresses, audio parameters, tape speed. When the recorder is switched on again, it automatically enters STOP and SAFE mode.

- Drop-in from play mode by simply pressing the REC key (internally programmable).

- Drop-out from record mode by pressing the PLAY key.

- Reduced spooling speed: the full spooling speed (approx. 10 m/s) can be switched down to 7, 4 or 1 m/s.

- Zerolocator : automatic search of tape address (timer reading) 00:00.

- Transferlocator LOC 1 ... LOC 4: for storing and automatic searching 4 different tape addresses. Stored addresses can be displayed without executing the actual search command.

- Soft keys: the following internally programmable functions can be assigned to the keys LOC2 ... LOC 4:
  LOC START (search last PLAY address)
  LIFTER (defeats tape lift during spooling)
  FADER (local command keys disabled, only fader start possible)
  TAPE DUMP (dump edit mode, take-up motor is switched off)
  REM CONTR (local command keys disabled, operation only with remote control)
  CODE READY (enables recording on time code channel)

  These keys feature special recesses for attaching self-adhesive function labels.

- Microprocessor-controlled audio set-up. The following audio parameters can be programmed (two types of tape each for NAB and CCIR equalization) with the aid of the buttons located below the front panel:
  Reproduce / Sync: LEVEL, TREBLE, BASS, EQUALIZATION
  Record mode: LEVEL, TREBLE, BIAS, ERASE, EQUALIZATION
  Resolution: 256 steps, displayed as hexadecimal values on the tape timer.

  The audio parameters remain stored even after the recorder has been switched off. They can also be saved by copying them through the serial remote port to an external storage medium from where they can subsequently be reloaded; this means that automatic and reproducible audio set-up of the A810 is possible.

- Internal confidence test system with error diagnostics for the main functions:
  Automatic check for correct functioning when the recorder is switched on; a subset of the test is periodically repeated.

1.2 STANDARD VERSIONS

A810-1 FULL TRACK VERSIONS

A810-1

Article No. 60.118.10110

Portable recorder for 6.25 mm tape.
Audio channel control (INPUT/SYNC/REPRO/READY/SAFE).
Built-in monitor speaker.
Chassis version.
2 of the 3 available tape speeds (3.75 7.5 and 15 ips) selectable at the front panel (standard setting: 7.5/15 ips).

A810-1 HS

Article No. 60.118.10111

Portable recorder for 6.25 mm tape.
Audio channel control (INPUT/SYNC/REPRO/READY/SAFE).
Built-in monitor speaker.
Chassis version.
4 Tape speeds: 3.75, 7.5, 15, and 30 ips.

A810-1 VU

Article No. 60.118.10120

Portable recorder for 6.25 mm tape.
VU-meter, channel control (INPUT/SYNC/REPRO/READY/SAFE) and monitor speaker built into recorder.
Chassis version.
2 of the 3 available tape speeds (3.75, 7.5, and 15 ips) selectable at the front panel.

A810-1 VU HS

Article No. 60.118.10121

Portable recorder for 6.25 mm tape.
VU-meter, channel control (INPUT/SYNC/REPRO/SAFE), and monitor speaker built into recorder.
Chassis version.
4 Tape speeds: 3.75, 7.5, 15, and 30 ips.

A810-1 VUK

Article No. 60.118.10130

Recorder for 6.25 mm tape.
VU-meter, channel control (INPUT/SYNC/REPRO/SAFE), and monitor speaker built into separate panel.
Ready for installation in console.
2 of the 3 available tape speeds (3.75, 7.5, and 15 ips) selectable at the front panel.

A810-1 VUK HS

Article No. 60.118.10131

Recorder for 6.25 mm tape.
VU-meter, channel control (INPUT/SYNC/REPRO/READY/SAFE), and monitor speaker built into separate panel.
Ready for installation in console.
4 Tape speeds: 3.75, 7,5, 15, and 30 ips.

STEREO VERSIONS

A810-0.75

Article No. 60.118.10210

Portable recorder for 6.25 mm tape.
Stereo track separation 0.75 mm, overlapping erasure.
Audio channel control (INPUT/SYNC/REPRO/READY/SAFE).
Built-in monitor speaker.
Chassis version.
2 of the 3 tape speeds (3.75, 7.5, and 15 ips) selectable at the front panel.

A810-0.75 HS

Article No. 60.118.10220

Portable recorder for 6.25 mm tape.
Stereo track separation 0.75 mm, overlapping erasure.
Audio channel control (INPUT/SYNC/REPRO/READY/SAFE).
Built-in monitor speaker.
Chassis version.
4 Tape speeds: 3,75, 7.5, 15, and 30 ips.

A810-0.75 VU

Article No. 60.118.10230

Portable recorder for 6.25 mm tape.
Stereo track separation 0.75 mm, overlapping erasure.
VU-meters, channel control (INPUT/SYNC/REPRO/READY/SAFE), and monitor speaker built into recorder.
Chassis version.
2 of the 3 tape speeds (3.75, 7.5, and 15 ips) selectable at the front panel.

A810-0.75 VU HS

Article No. 60.118.10240

Portable recorder for 6.25 mm tape.
Stereo track separation 0.75 mm, overlapping erasure.
VU-meters, channel control (INPUT/SYNC/REPRO/SAFE), and monitor speaker built into recorder.
Chassis version.
4 Tape speeds: 3,75, 7.5, 15, and 30 ips.

A810-0.75 VUK

Article No. 60.118.10250

Recorder for 6.25 mm tape.
Stereo track separation 0.75 mm, overlapping erasure.
VU-meters, channel control (INPUT/SYNC/REPRO/READY/SAFE), and monitor speaker built into separate panel.
Ready for installation in console.
2 of the 3 available tape speeds (3.75, 7.5, and 15 ips.

A810-0.75 VUK HS

Article No. 60.118.10260

Recorder for 6.25 mm tape. Stereo track separation 0.75 mm, overlapping erasure.
VU-meters, channel control (INPUT/SYNC/REPRO/READY/SAFE), and monitor speaker built into separate panel.
Ready for installation in console.
4 Tape speeds: 3,75, 7,5, 15, and 30 ips.

A10-2/2 2-TRACK VERSIONS

A810-2/2

Article No. 60.118.10310

Portable recorder for 6.25 mm tape.
Stereo/2-track, 2mm track separation, overlapping erasure.
Audio channel control (INPUT/SYNC/REPRO/READY/SAFE).
Built-in monitor speaker.
Chassis version.
2 of the 3 available tape speeds (3.75, 7.5, and 15 ips) selectable at the front panel.

A810-2/2 HS

Article No. 60.118.10311

Portabale recorder for 6.25 mm tape.
Stereo/2-Track, 2 mm track separation, overlapping erasure.
Audio channel control (INPUT/SYNC/REPRO/READY/SAFE).
Built-in monitor speaker.
Chassis version.
4 Tape speeds: 3.75, 7.5, 15, and 30 ips.

A810-2/2 VU

Article No. 60.118.10320

Portable recorder for 6.25 mm tape.
Stereo/2-track, 2mm track separation, overlapping erasure.
VU-meters, channel control (INPUT/SYNC/REPRO/READY/SAFE), and monitor speaker built into recorder.
Chassis version.
2 of the 3 available tape speeds (3.75, 7.5, and 15 ips) selectable at the front panel.

A810-2/2 VU HS

Article No. 60.118.10330

Portable recorder for 6.25 mm tape.
Stereo/2-track, 2mm track separation, overlapping erasure.
VU-meters, channel control (INPUT/SYNC/REPRO/READY/SAFE) and monitor speaker built into recorder.
Chassis version.
4 Tape speeds: 3.75, 7.5, 15, and 30 ips.

A810-2/2 VUK

Article No. 60.118.10340

Recorder for 6.25 mm tape.
Stereo/2-track, 2mm track separation, overlapping erasure.
VU-meters, channel control (INPUT/SYNC/REPRO/READY/SAFE), and monitor speaker built into separate panel.
Ready for installation in console.
2 of the 3 available tape speeds (3.75, 7.5, and 15 ips) selectable at the front panel.

A810-2/2 VUK HS

Article No. 60.118.10350

Recorder for 6.25 mm tape.
Stereo/2-track, 2mm track separation, overlapping erasure.
VU-meters, channel control (INPUT/SYNC/REPRO/READY/SAFE), and monitor speaker built into separate panel.
Ready for installation in console.
4 Tape speeds: 3.75, 7.5, 15, and 30 ips.

A810-2 TC HS

Article No. 60.118.10411

Portable recorder for 6.25 mm tape.
Stereo/2-track, 2 mm track separation.
Audio channel control (INPUT/SYNC/REPRO/READY/SAFE) and monitor speaker built into recorder.
Programmable button (READY/SAFE) for code channel control.
4 Tape speeds 3.75*, 7.5, 15, and 30 ips. (*time code channel inoperative)

A810-2 TC VU

Article No. 60.118.10420

Portable recorder for 6.25 mm tape.
Stereo/2-track, 2 mm track separation.
VU-meters, audio channel control (INPUT/SYNC/REPRO/READY/SAFE), and monitor speaker built into recorder.
Programmable button (READY/SAFE) for code channel control.
Chassis version
2 of the 3 available tape speeds (3.75, 7.5, and 15 ips) selectable at the front panel.

A810-2 TC VU HS

Article No. 60.118.10421

Portable recorder for 6.25 tape.
Stereo/2-track, 2 mm track separation.
VU-meters, audio channel control (INPUT/SYNC/REPRO/READY/SAFE) and monitor speaker built into separate panel.
Programmable button (READY/SAFE) for code channel control.
Chassis version.
4 Tape speeds: 3.75*, 7.5, 15, and 30 ips. (* time code channel inoperative)

A810-2 TC VUK

Article No. 60.118.10430

Recorder for 6.25 mm tape.
Stereo/2-track, 2 mm track separation.
VU-meters, audio channel control and code channel control (INPUT/SYNC/REPRO/READY/SAFE), and monitor speaker built into separate panel.
Recorder ready for installation in console.
2 of the 3 available tape speeds (3.75, 7.5, and 15 ips) selectable at the front panel.

A810-2 TC VUK HS

Article No. 60.118.10431

Recorder for 6.25 mm tape.
Stereo/2-track, 2mm track separation.
VU-meters, audio channel control, and code channel control (INPUT/SYNC/REPRO/READY/SAFE), and monitor speaker built into separate panel.
Recorder ready for installation in console.
4 Tape speeds: 3.75*, 7.5, 15, and 30 ips. (*time code channel inoperative)

1.3 OPTIONS

Varispeed

- For installation in chassis versions (if panel space available): Order No. 871. Not feasible on machines with 2 VU-meters!
  Filler panel (1 module, part No. 1.810.002.02) must also be ordered.

- For installation into separate panel of VUK console versions: Order No. 872.

Channel control

For separate control of second audio channel in the A810-0.75 recorders or for full control of the time code channel in the A810-2 TC recorder. Order No. 933.

A filler panel (1 module, part No. 1.810.002.02) must also be ordered for the A810-2 TC.

Tape scissors, tape marker

Tape scissors, order No. 891

Tape marker, order No. 892.

Tape scissors and tape marker, order No. 893.

Mono/Stereo switch, test generator

Mono/stereo switch, Order No. 902.

Test generator, order No. 903 (for full-track and 2-channel recorders).

Mono/Stereo switch and test generator, Order No. 903 (for stereo recorders).

Serial remote port for serial remote control

Printed circuit board, cable harness with connectors, Order No. 881.

Noise reduction system control

- For installation in chassis and portable versions, Order No. 943.
- For installation in console versions, Order No. 944.

1.4 ACCESSORIES

Standard accessories

(Kit No. 20.020.302.25)

1 Pc.	Hexagon-socket-screw key 2.0 mm	(Part No. 26.06.1020)
1 Pc.	Hexagon-socket-screw key 2.5 mm	(Part No. 26.06.1025)
1 Pc.	Hexagon-socket-screw key 4.0 mm	(Part No. 26.06.1040)
1 Pc.	Studer driver 3.0 mm	(Part No. 10.258.003.10)
5 Pcs.	Microfuse 500 mA, 5x20 mm	(Part No. 51.01.0114)
5 Pcs.	Microfuse 1.6 A, 5x20 mm	(Part No. 51.01.0119)
5 Pcs.	Microfuse 3.15 A, 5x20 mm	(Part No. 51.01.0122)
5 Pcs.	Microfuse 5.0 A, 5x20 mm	(Part No. 51.01.0124)
2 Pcs.	NAB adapter	(Part No. 89.01.0354)
1 Pc.	Power cord 2.5 m, 3x1 mm2, Europa appliance inlet	(Part No. 10.223.001.01)
	(Replacement rubber ring for NAB adapter	Part No. 10.039.001.01)

Console

Any chassis version of the A810 tape recorder can be installed into the basic console. It can be rolled around on lockable swivel casters. Height: 840 mm. Order No. 1.038.880.00.

The following items must also be ordered:

- Crosstie, part No. 1.038.883.00 or
- Pedestal, part No. 1.038.890.00 (for installation of synchronizer and/or noise reduction system),

and:

- Rear cover plate, part No. 1.038.885.00 (no ext. VU-panel), or
- VU-meter penthouse, low, part No. 1.038.886.00 (sep. VU-meter panel), or
- VU-meter penthouse, high, Order No. 1.038.888.00 (sep. VU-meter panel and synchronizer control).

Wooden side panels

A set of wooden side panels with hinged handles is available as a complete set, part No. 1.810.077.00.

Handles for chassis version

A set of handles (not hinged) is available for the A810 chassis versions, part No. 1.810.075.00.

Tape transport remote control

The tape transport remote control 1.328.200.00 in the desk-top housing, with a 15 m cable, supports the remote control of all tape deck functions, including

- Decreasing the spooling speed (in 3 steps below the standard speed)
- RECAP (fast rewind for as long as key is held down, then PLAY)
- LOC 1 (storing and automatic search of a tape address)
- LIFTER (defeats tape lift during spooling)
- VARISPEED (with external TTL signal)

Adapter for self-supporting pancake

A reel flange (adapter) part No. 1.013.046.00 is required for flangeless hubs (DIN 45 515).

Extension board

Part No. 1.820.799.00, used in conjunction with alignments on audio and logic assemblies.

REVOX tape splicing kit

Comprises a professional cutting and splicing block, a cutting blade, splicing tabs, and a wax pencil; kit No. 10.030.452.40.

STUDER cleaning kit in carrying case

Comprises 1 bottle of soundhead cleaner, 1 bottle of aluminite cleaner, lint-free nonwoven fleece, one buckskin, kit No. 10.496.010.00.

Soundhead cleaner, replacement bottle	Part No. 10.496.021.00
Soundhead cleaner, 1 liter	Part No. 10.496.022.00
Aluminite cleaner, replacement bottle	Part No. 10.496.025.00
Aluminite cleaner, 1 liter	Part No. 10.496.026.00

Aluminum case for A810

Three types of aluminum carrying cases are available:

- Aluminum case for transporting a portable A810 equipped with wooden side panels:
  Part No. 10.386.001.03.

- Aluminum case for transporting an A810 chassis version:
  Part No. 10.368.002.04.

- Aluminum case for installing an A810 chassis version:
  Part No. 10.386.001.01.
  The recorder can be put into operation after the cover and the rear panel have been removed.
  Kit No. 1.810.076.00 is required for installing the chassis version into the carrying case 10.386.001.01.

Tool case

Part No. 20.020.001.06 (220 V version)
Part No. 20.020.001.56 (110 V version)

Comprises:
1 Set of hexagon-socket-screw keys, spare fuses, replacement lamps, small parts, 1 extension board, 1 demagnetizing choke, various screwdrivers, various pliers, one pair of tweezers, cylindrical flashlight, soldering iron (WELLER) with holder, spring dynamometers, various open-end wrenches, screwdriver for recessed-head screws (Phillips), cleaning material, gauges for adjusting the tape tension sensors, etc.

Additional manuals

Operating and maintenance instructions, ENGLISH, No. 10.23.5210
Operating and maintenance instructions, FRENCH, No. 10.23.5220
Operating and maintenace instructions, GERMAN, No. 10.23.2960

Operating instructions, ENGLISH, No. 10.23.2951
Operating instructions, FRENCH, No. 10.23.5230
Operating instructions, GERMAN, No. 10.23.2941

1.5 TECHNICAL SPECIFICATIONS

These specifications apply for operation in horizontal position

---

Tape speeds:

Type HS:
30 - 15 - 7.5 - 3.75 ips
(76.2 - 38.1 - 19.05 - 9.525 cm/s)

Type LS (standard programming):
15 - 7.5 ips
(38.1 - 19.05 cm/s)
or (internally programmable):
7.5 - 3.75 ips
(19.05 - 9.525 cm/s)

Variable speed (with varispeed option):
±7 semitones from nominal speed

Tape speed deviation:

max. ± 0.2% from nominal speed

Tape slip:

max. 0.1%

Tape reels:

NAB, EIA (CINE), DIN
max. diameter 11.1 " (282 mm)
max. reel capacity 3280 ft. (1000 m) with professional-quality tape
(tape thickness: 50 um)

Tape width:

1/4 " (6.3 mm)

Wow and flutter:

Peak weighted according to DIN 45507 or IEC Publ. 386, ambient temperature 68° F (20° C)

30 ips	15 ips	7.5 ips	3.75 ips
(76.2 cm/s)	(38.1 cm/s)	(19.05 cm/s)	(9.525 cm/s)
max. 0.04%	max. 0.05%	max. 0.07%	max. 0.12%

Start time:

max. 0.5 s for 15 ips and 1000 m tape on DIN hub or
730 m tape on NAB reel
(to attain double value of flutter specification)

Tape timer:

5-digit LCD displays hours, minutes and seconds for all tape speeds
counts past zero with leading negative sign.
Range: 1 h 59 min 59 s to -1 h 59 min 59 s
or
5-digit LED display, same as LCD except:
Range: 9 h 59 min 59 s to -59 min 59 s
Time code level indicated with LED behind last seconds position.

Winding time:

approx. 150 s for 1000 m tape;
approx. 120 s for 730 m tape.

Stopping time from spooling:

max. 3 s

Tape tension:

Reproduce and record:
0.75 N (75 p) nominal, adjustable ±0.15 N (±15 p)

Spooling:
0.75 N (75 p) nominal, adjustable 0.4 - 1.0 N (40 - 100 p)

Peak tape tension for start, stop, and reversal of spooling direction:
6 N (600 p) nominal, adjustable 3 - 6 N (300 - 600 p)

Inputs:

Balanced and floating
Impedance ≥ 10 kOhms, 30 Hz ... 20 kHz

Input level:

- Nominal input level relative to reference magnetic flux:
  +6, +10, +14, +16 dBm; internally programmable
- Nominal input level relative to operating level (according to NAB):
  0, +4, +8, +10 dBm; internally programmable
  (internal adjustment range of the magnetic flux with above input levels: 100 - 1000 nWb/m)

Recorders with VU-meter panel and input/output level controls:
max. 10 dB increase in input sensitivity with input level control in uncalibrated mode.

Maximum input level: +24 dBm

Outputs:

balanced and floating
Impedance ≤ 50 Ohms, 30 Hz ... 20 kHz
Load impedance ≥ 200 Ohms.

Output level:

- nominal output level relative to reference magnetic flux:
  +6, +10, +14, +16 dBm; internally programmable
- nominal output level relative to operating level (according to NAB):
  0, +4, +8, +10 dBm; internally programmable
  (internal adjustment range of reproduce gain for operating magnetic flux of 100 - 1000 nWb/m)

Recorders with VU-meter panel and input/output level controls:
max. 10 dB increase in reproduce gain with output level control in uncalibrated mode.

Maximum output level: +24 dBm (Load impedance 600 Ohms)

Equalizations:

NAB and CCIR, switch-selectable

Equalization time constants:

	30 ips (76.2 cm/s)	15 ips (38.1 cm/s)	7.5 ips (19.05 cm/s)	3.75 ips (9.525 cm/s)
AES:	17.5/∞ us	CCIR: 35/ ∞ us	70/ ∞ us	90/3180 us
AES:	17.5/∞ us	NAB: 50/3180 us	50/3180 us	90/3180 us

Frequency response:

Record-reproduce:

	30 ips (76.2 cm/s)	15 ips (38.1 cm/s)	7.5 ips (19.05 cm/s)	3.75 ips (9.525 cm/s)
±2 dB:	40 Hz ... 22 kHz	20 Hz ... 20 kHz	20 Hz ... 16 kHz	20 Hz ... 10 kHz
±1 dB:	40 Hz ... 20 kHz	40 Hz ... 18 kHz	30 Hz ... 12 kHz	30 Hz ... 8 kHz

Reproduction from record head (SYNC reproduction)
- Amplifier programmed for "narrow band":

	30 ips (76.2 cm/s)	15 ips (38.1 cm/s)	7.5 ips (19.05 cm/s)	3.75 ips (9.525 cm/s)
±2 dB:	60 Hz ... 12 kHz	30 Hz ... 12 kHz	20 Hz ... 8 kHz	---------- ----------

- Amplifier programmed for "wide band":

	30 ips (76.2 cm/s)	15 ips (38.1 cm/s)	7.5 ips (19.05 cm/s)	3.75 ips (9.525 cm/s)
±2 dB:	60 Hz ... 20 kHz	30 Hz ... 18 kHz	20 Hz ... 12 kHz	---------- ----------

---

Signal-to-noise ratios: (record-reproduce)

CCIR {Equalization according to CCIR (AES at 30 ips), measured with tape AGFA ~~XXXXXX~~ BASF SPR 50 LHL, or aequivalent type}
PEM 468

	30 ips (76.2cm/s)	15 ips (38.1cm/s)	7.5 ips (19.05cm/s)	3.75 ips (9.525cm/s)
Full track (320 nWb/m) track width 6.3 mm (1/4")				
- Linear, RMS, 30 Hz - 20 kHz	65 dB	63 dB	62 dB	57 dB
- Quasi-peak, weighted according to CCIR 468-1 (DIN 45405)	56 dB	55 dB	54 dB	51 dB
- RMS value, A weighted according to DIN 45633 as per IEC Publ. 179	69 dB	67 dB	65 dB	62 dB
Stereo (510 nWb/m) track width 2.75 mm				
- Linear, RMS, 30 Hz - 20 kHz	65 dB	63 dB	62 dB	57 dB
- Quasi-peak, weighted according to CCIR 468-1 (DIN 45405)	56 dB	55 dB	54 dB	51 dB
- RMS value, A weighted according to DIN 45633 as per IEC Publ. 179	69 dB	67 dB	65 dB	62 dB
Two-track (510 nWb/m) track width 2.0 mm				
- Linear, RMS, 30 Hz - 20 kHz	64 dB	62 dB	61 dB	56 dB
- Quasi-peak, weighted according to CCIR 468-1 (DIN 45405)	55 dB	54 dB	53 dB	50 dB
- RMS value, A weighted according to DIN 45633 as per IEC Publ. 179	68 dB	66 dB	64 dB	61 dB

NAB {Equalization according to NAB (AES at 30 ips), measured with tape SCOTCH 3M 226 or aequivalent type}

	30 ips (76.2cm/s)	15 ips (38.1cm/s)	7.5 ips (19.05cm/s)	3.75 ips (9.525cm/s) (referred to 510 nWb/m)
Full track (1040 nWb/m) track width 6.3 mm (1/4")				
- Linear	74 dB	72 dB	74 dB	61 dB
- RMS, weighted according to ASA-A	79 dB	74 dB	76 dB	66 dB
Stereo (1040 nWb/m) track width 2.75 mm				
- Linear	71 dB	68 dB	70 dB	57 dB
- RMS, weighted according to ASA-A	75 dB	71 dB	73 dB	62 dB
Two-track (1040 nWb/m) track width 2.0 mm				
- Linear	70 dB	67 dB	69 dB	56 dB
- RMS, weighted according to ASA-A	74 dB	70 dB	72 dB	61 dB

Signal-to-noise ratios: (record-SYNC reproduction)
(Amplifier programmed to "narrow band")

NAB {Equalization according to NAB (AES at 30 ips), measured with tape SCOTCH 3M 226 or aequivalent type}

	30 ips (76.2cm/s)	15 ips (38.1cm/s)	7.5 ips (19.05cm/s)	3.75 ips (9.525cm/s)
Full track (1040 nWb/m) track width 6.3 mm (1/4")				
- Linear	69 dB	69 dB	69 dB	-----
- RMS, weighted according to ASA-A	75 dB	72 dB	72 dB	-----
Stereo (1040 nWb/m) track width 2.75 mm				
- Linear	66 dB	66 dB	66 dB	-----
- RMS, weighted according to ASA-A	72 dB	69 dB	69 dB	-----
Two-track (1040 nWb/m) track width 2.0 mm				
- Linear	65 dB	65 dB	65 dB	-----
- RMS, weighted according to ASA-A	71 dB	68 dB	68 dB	-----

Distortion: (Record-reproduce, 1 kHz, 15 ips)

Full track (320 nWb/m): ≤ 0.3 %
Stereo and two-track (510 nWb/m): ≤ 0.6 %

Cross-talk attenuation: (at 1 kHz, according to DIN 45521)

Stereo recorders: ≥ 55 dB
Two track recorders: ≥ 65 dB

Erase efficiency: (at 1 kHz and 510 nWb/m, 15 ips)

Stereo recorders with full-track erase head: ≥ 85 dB
Two-track recorders with overlapping erase head: ≥ 75 dB

Erase and bias frequency:

153.6 kHz for all tape speeds

VU-meter:

Switchable between VU indication (according to IEC recommendation 268, Part 10, Section 4) and PPM (peak programme meter) (according to IEC recommendation 268, Part 10, Section 3, except for 24,1, scale division).

Power supply (line voltage selector):
100 V, 120 V, 140 V, 200 V, 220 V, 240 V; ±10% ; 50 or 60 Hz

Power consumption:

Stop:	80 W
Recording on 2 channels:	160 W
Spooling:	190 W
Peak tape tension during spooling:	240 W

Disturbed operation: (transient line voltage failure)

Operating status unaffected by line voltage failures up to 100 ms.

Ambient temperatures:

50° F ... 104° F (+10° C ... +40° C)

Relative humidity:

20% ... 90%, non-condensing

Safety standard:

according to IEC recommendation, publication 65, degree of protection I (line filter, power switch, power fuse, power transformer and line voltage selector conform to type I and II).

Weight: (portable version)

Net: 30 kg ... 31 kg, depending on configuration
Gross: 34 kg ... 35 kg, depending on configuration (air freight)
52 kg ... 53 kg, depending on configuration (sea freight)

Technical data of the time code channel

The time code channel conforms to IEC publication 461, DIN 45511, Part 7.

Track width/location:

0.38 mm, center of tape

Code format:

SMPTE/EBU 80 bits address code

Tape speeds:

30 - 15 - 7.5 ips
(76.2 - 38.1 - 19.05 cm/s)

Magnetic flux of time code track:

CCIR: 723 nWb/m pp ±3 dB
NAB: effective magnetic flux corresponding to magnetic flux of sound track at operating level ±3 dB.

Time code channel input:

Balanced and floating
Input impedance 10 kOhms

Input level:

nom.: 2 V pp
min.: 1 V pp
max.: 4 V pp

Time code channel output:

Balanced and floating
Output impedance < 40 Ohms

Output level:

2 V pp, Load impedance ≥ 200 Ohms

Cross-talk attenuation code channel to audio:
≥ 90 dB, relative to 510 nWb/m magnetic flux of sound track.

Coincidence error between code track and audio:
{with tape travel time compensation electronics (TIME CODE DELAY UNIT) enabled}

max. 4 ms at 15 ips

1.5.1
Dimensions

A810

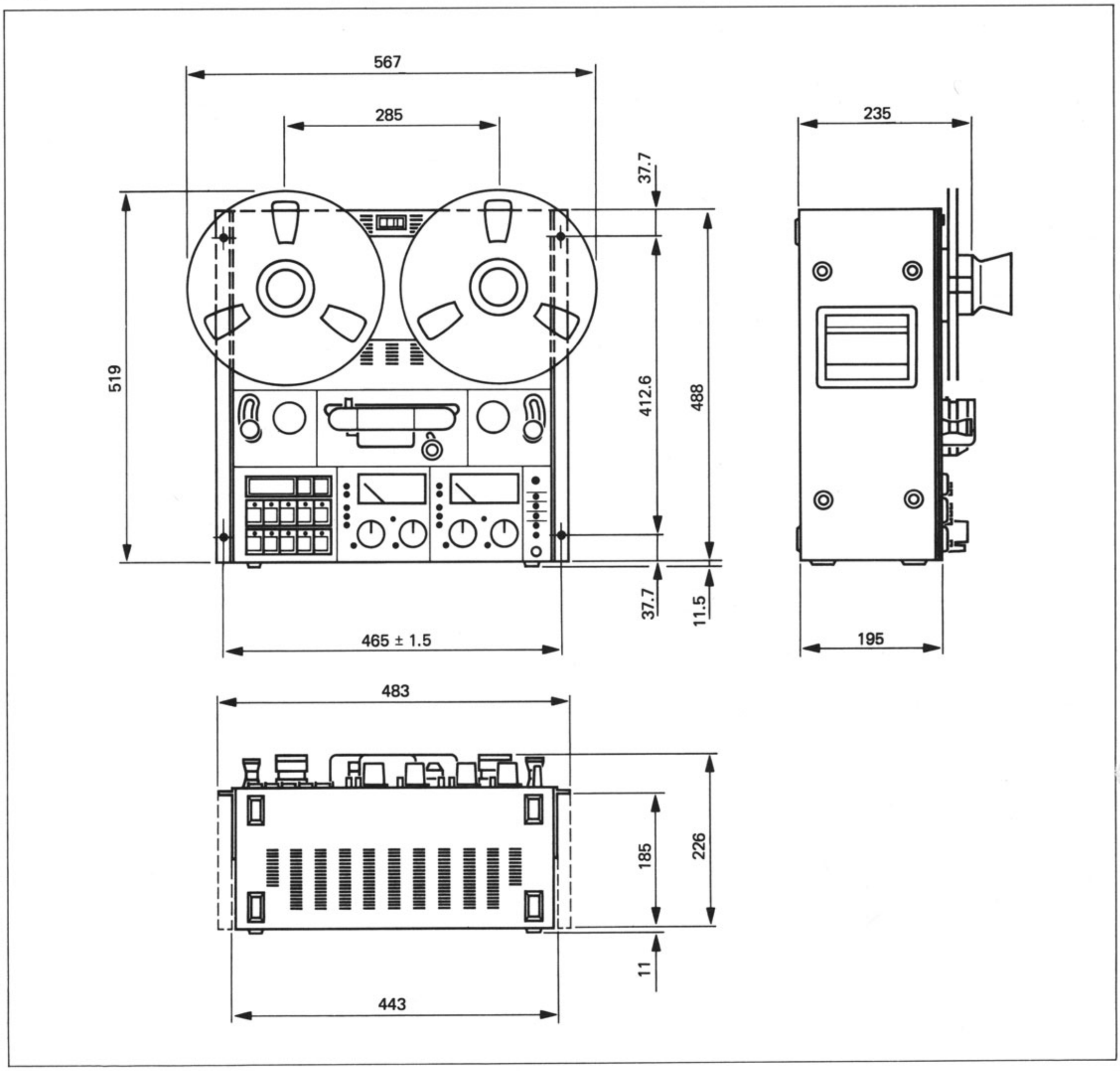

Console of A810

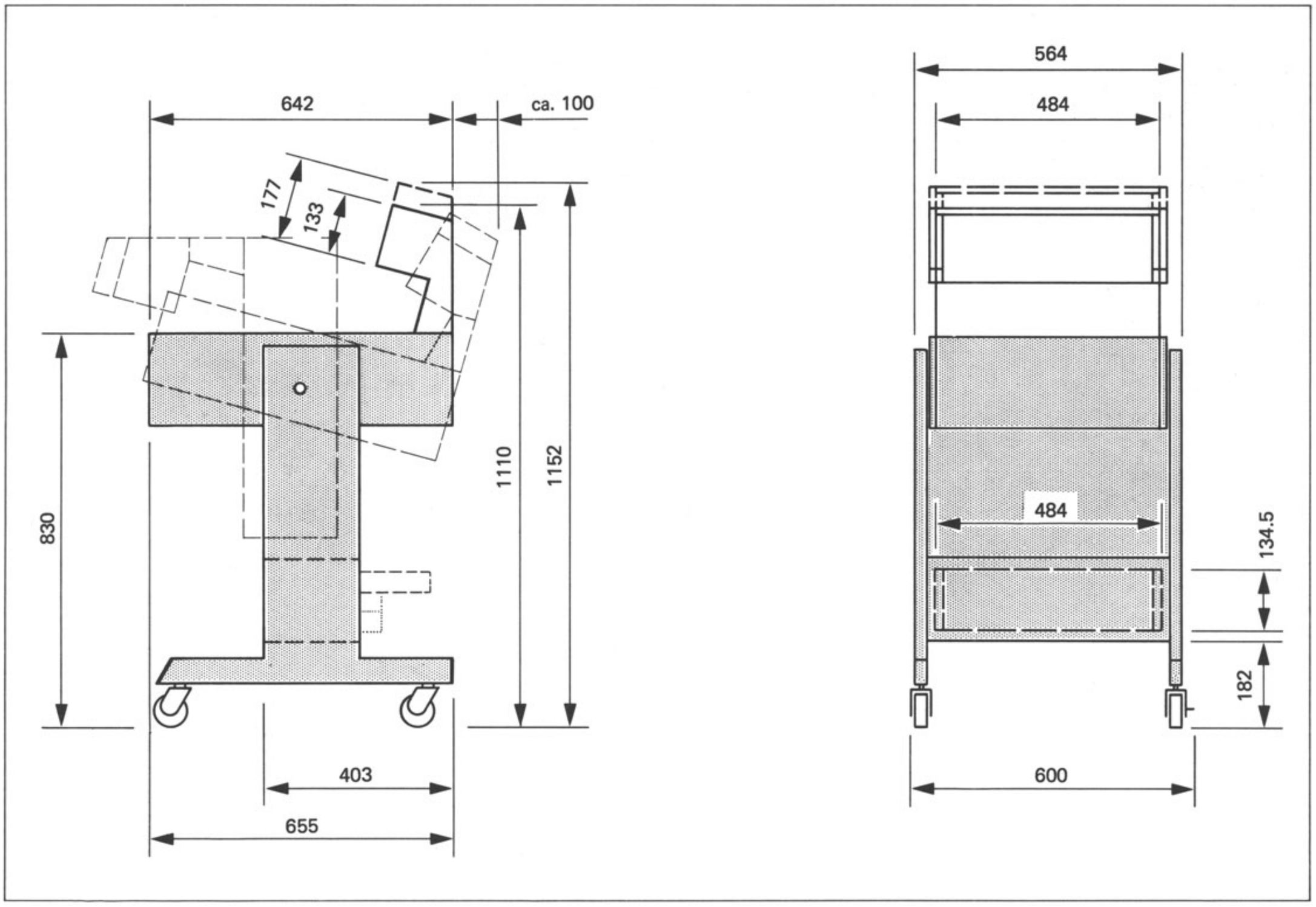

1.5.2
Packing

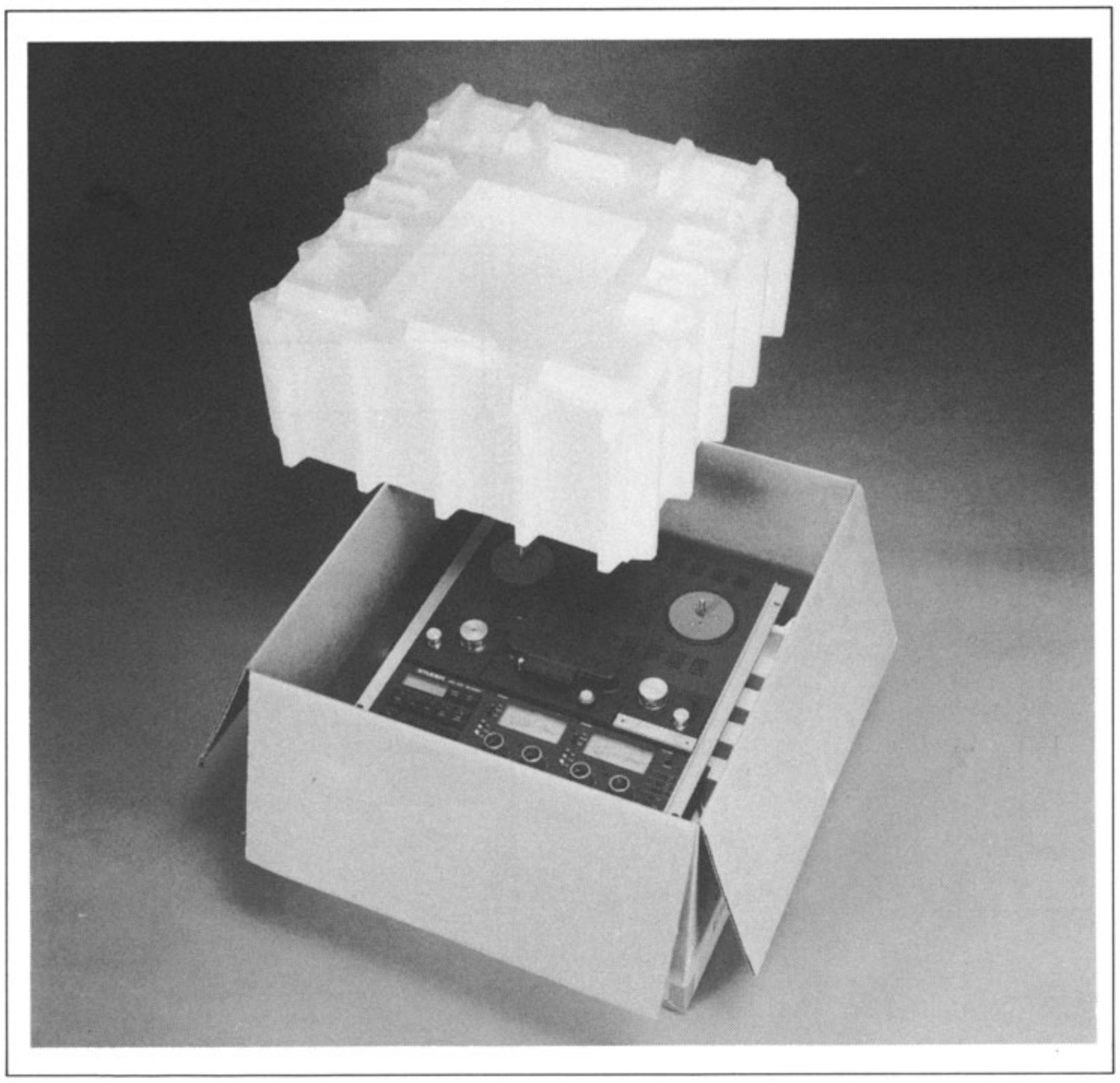

Air freight

A810, portable version:
Carton 64 × 62 × 46 cm
Gross weight, depending on configuration: 34 kg to 35 kg

A810, console version:
Carton 64 × 62 × 46 cm
Gross weight, depending on configuration 34 kg to 35 kg
Console (and possibly VU-meter panel):
Carton 102 × 74 × 38 cm
Gross weight, depending on configuration 39 kg to 46 kg

Ocean freight

A810, portable version:
Box 82 × 78 × 72 cm
Gross weight, depending on configuration 52 kg to 53 kg

A810 console version:
Box 82 × 78 × 72 cm
Gross weight, depending on configuration 52 kg to 53 kg
Console (and possibly VU-meter panel):
Box 110 × 82 × 46 cm
Gross weight, depending on configuration 57 kg to 72 kg

1.5.3
Level diagrams

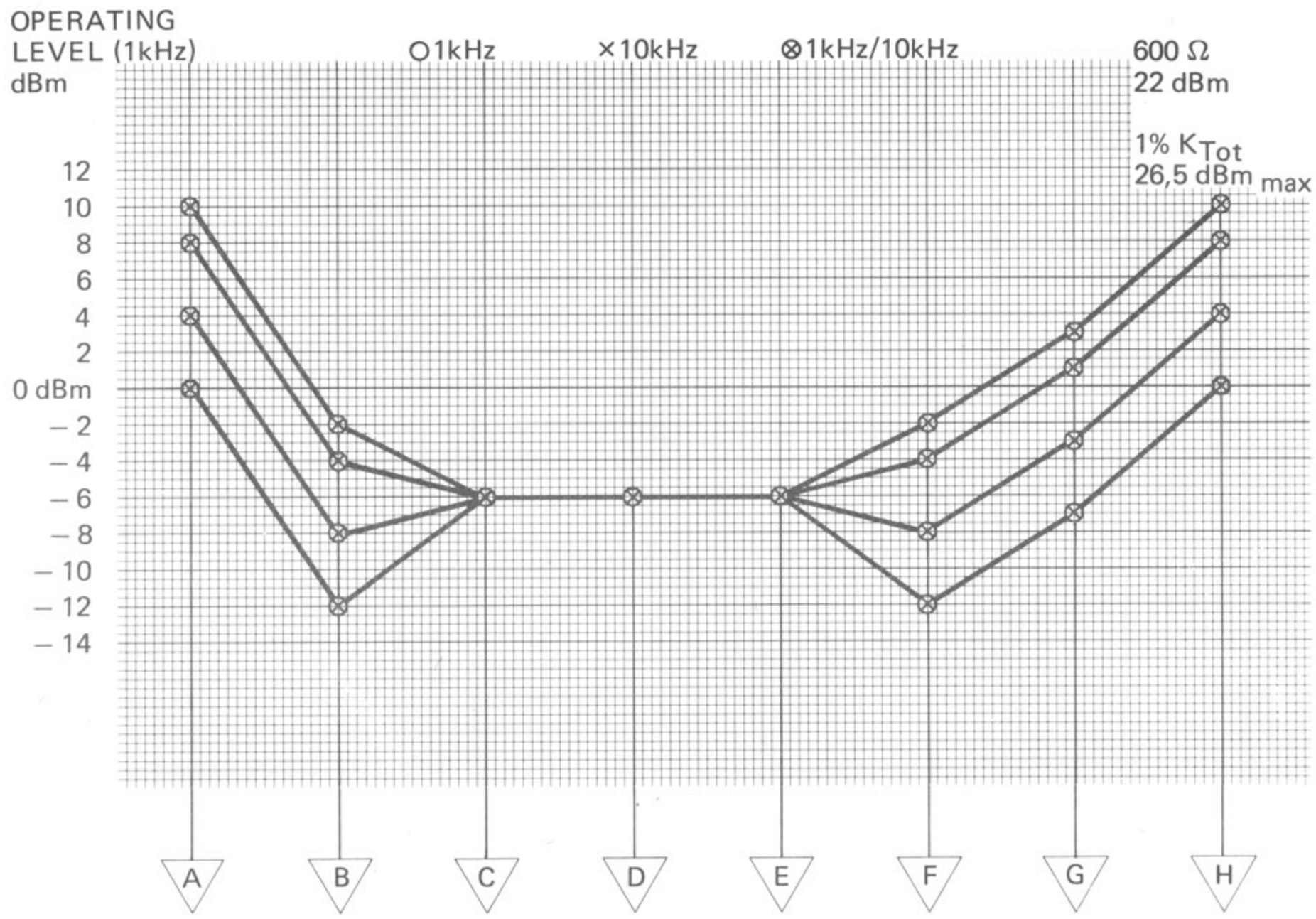

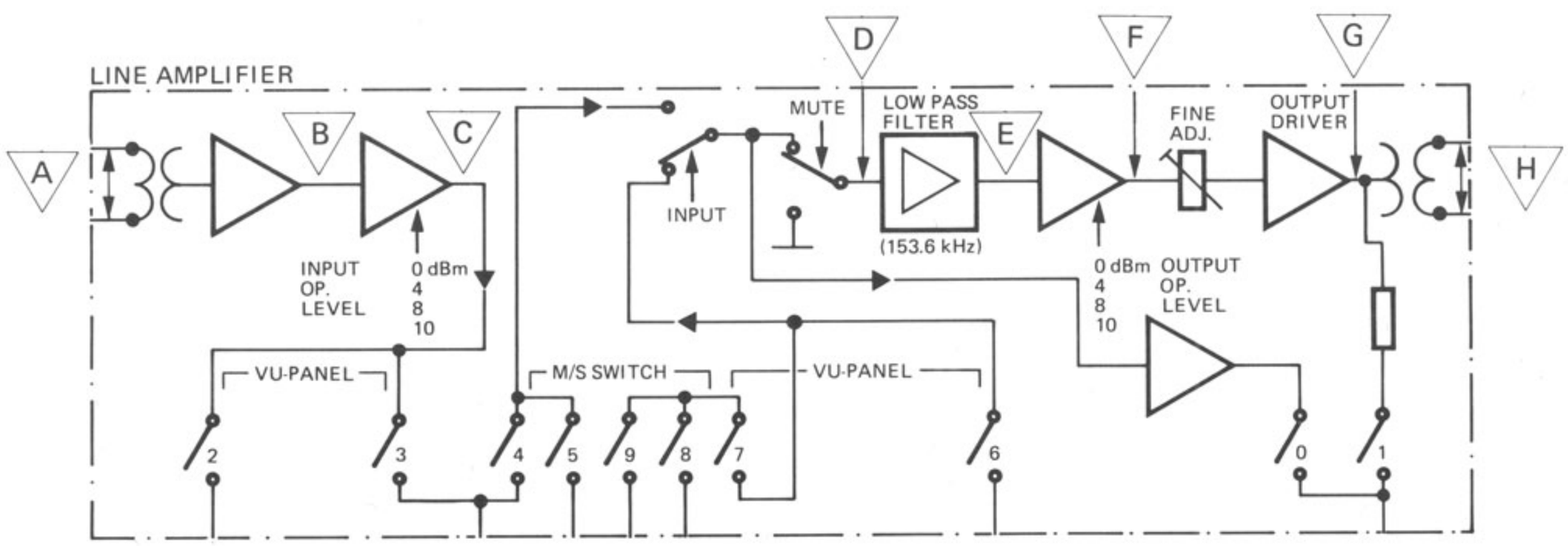

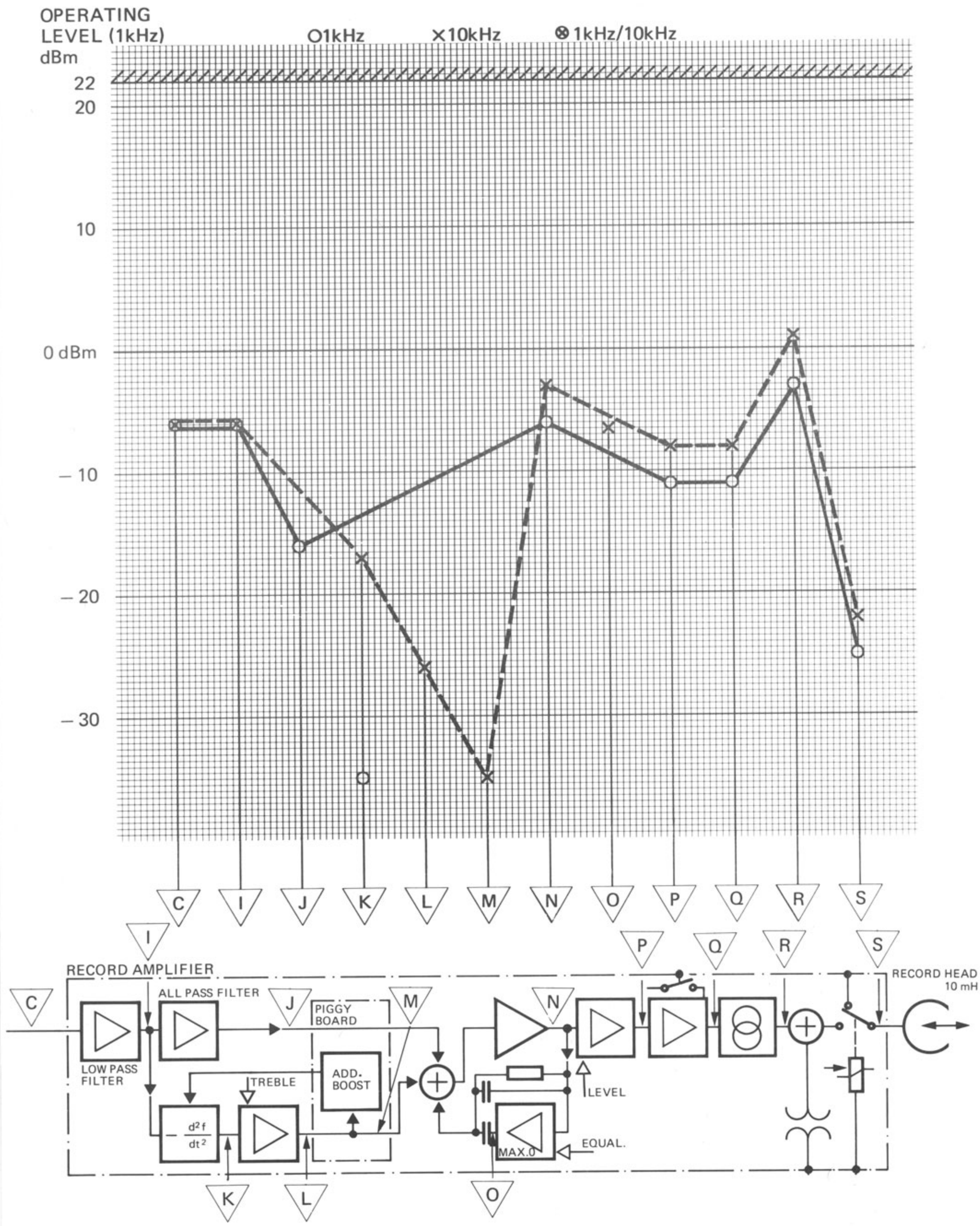
OPERATING
LEVEL (1kHz)
dBm
O1kHz
×10kHz
⊗1kHz/10kHz
22
20
10
0 dBm
– 10
– 20
– 30
C
I
J
K
L
M
N
O
P
Q
R
S
RECORD AMPLIFIER
ALL PASS FILTER
PIGGY BOARD
LOW PASS FILTER
TREBLE
ADD. BOOST
d²f/dt²
MAX.0
LEVEL
EQUAL.
RECORD HEAD
10 mH

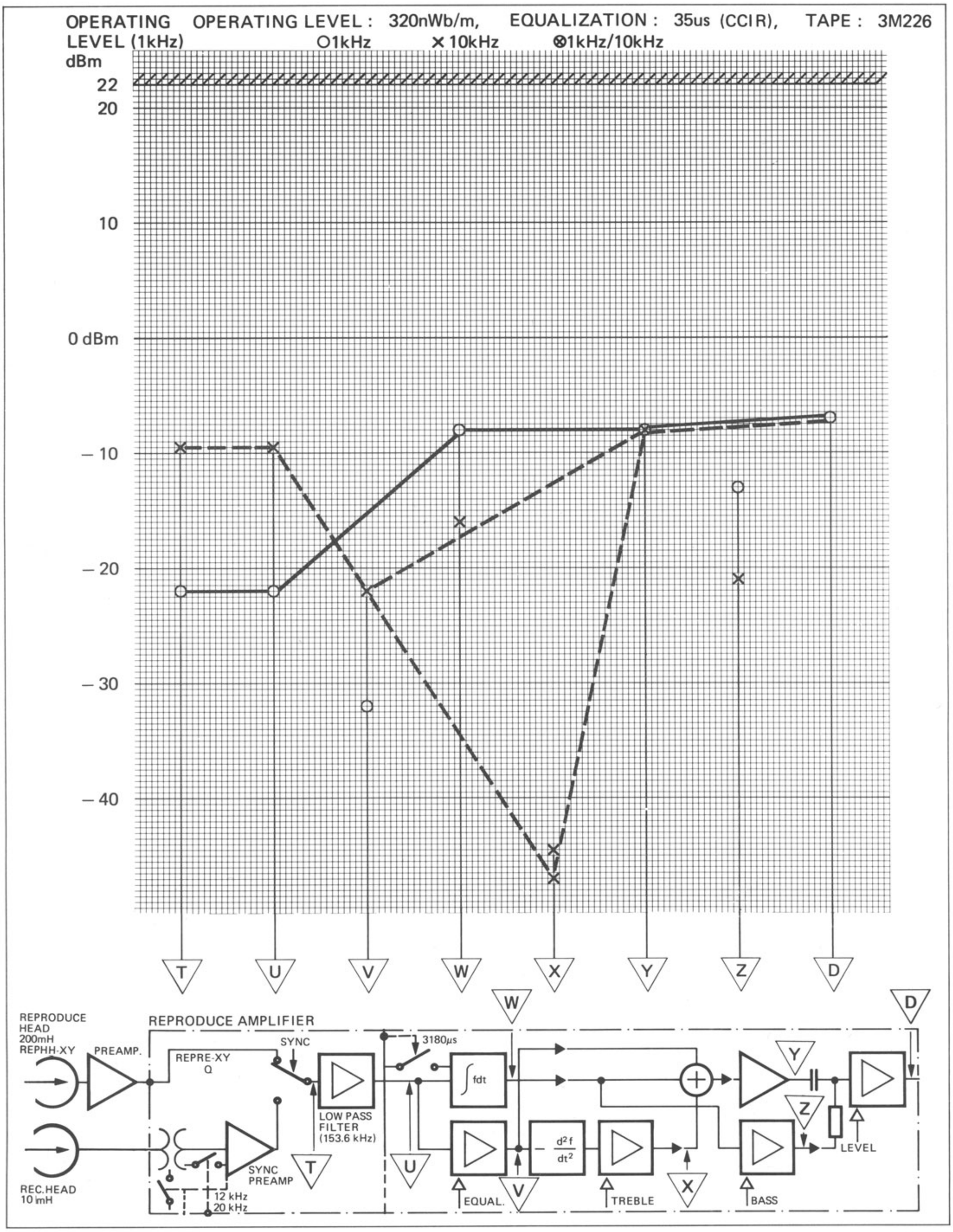
OPERATING LEVEL (1kHz)
OPERATING LEVEL : 320nWb/m,
EQUALIZATION : 35us (CCIR),
TAPE : 3M226
O1kHz
X 10kHz
⊗1kHz/10kHz
dBm
22
20
10
0 dBm
– 10
– 20
– 30
– 40
T
U
V
W
X
Y
Z
D
REPRODUCE HEAD 200mH REPHH-XY
PREAMP.
REPRODUCE AMPLIFIER
REPRE-XY Q
SYNC
3180µs
LOW PASS FILTER (153.6 kHz)
∫fdt
d²f/dt²
SYNC PREAMP
12 kHz
20 kHz
REC.HEAD 10 mH
EQUAL.
TREBLE
BASS
LEVEL

1.6
STANDARD CALIBRATION VALUES

The numbers in the following table represent hexadecimal values, i.e. they are in the same format as the numbers appearing on the tape timer display when the corresponding calibrations are performed. These values refer to 2 mm - 2-channel recorders, reference level (operating level) 320 nWb/m (or 257 nWb/m at 3.75 ips), tape type 3M 226.

Speed	Mode	Equal.	Level	Treble	Bass	Equal.
3.75	REPRO		82	70	90	95
3.75	RECORD		26	B0	30	BB
3.75	SYNC		00	00	00	00
7.5	REPRO	CCIR	66	39	80	87
7.5	RECORD	CCIR	30	A0	3E	75
7.5	SYNC	CCIR	62	50	96	87
7.5	REPRO	NAB	66	39	80	61
7.5	RECORD	NAB	30	A0	3E	99
7.5	SYNC	NAB	62	50	96	61
15	REPRO	CCIR	66	30	6A	44
15	RECORD	CCIR	30	54	46	BA
15	SYNC	CCIR	62	50	88	44
15	REPRO	NAB	66	30	6A	61
15	RECORD	NAB	30	54	46	99
15	SYNC	NAB	62	50	88	61
30	REPRO		66	38	48	26
30	RECORD		30	1B	50	DE
30	SYNC		62	50	60	26
Speed	Mode	Equal.	Level	Treble	Bass	Equal.

1.7 MAINTENANCE HINTS FOR THE SERVICE PERSONNEL

1.7.1 Abbreviations

A	assembly
ANT	antenna
B	bulb
BA	battery, accumulator
BR	optocoupler (bulb --> LDR)
C	capacitor
D	diode, DIAC
DL	LED
DLQ	optocoupler (LED --> phototransistor)
DLR	optocoupler (LED --> LDR)
DLZ	LED array, 7 segment display
DP	photodiode
DZ	rectifier
E	electronic part
EF	headphones
F	fuse
FL	filter
H	head (sound-, erase-)
HC	hybrid circuit (thick/thin film)
HE	hall element
IC	integrated circuit
J	jack (female)
JS	jumper
K	relais, contactor
L	inductor
LS	loudspeaker
M	motor
ME	meter
MIC	microphone
MP	mechanial part
P	plug (male)
PU	pick up
Q	transistor, FET, thyristor, TRIAC
QP	phototransistor
QPZ	phototransistor array
R	resistor
RP	light depending resistor (LDR)
RT	temperature sensitive resistor
RZ	resistor array
S	switch
T	transformer
TL	delay line
TP	test point
W	wire, stranded wire
X	socket, holder
XB	lamp socket
XF	fuse holder
XIC	IC-socket
Y	quartz, piezoelectric element
Z	network, array

These abbreviations may be combined (max. 3 characters).

1.7.2
Powers of ten

Name	Abbreviation	Value
Tera-	T	10**12
Giga-	G	10**9
Mega-	M	10**6
Kilo-	k	10**3
Milli-	m	10**-3
Mikro-	u	10**-6
Nano-	n (mu#)	10**-9
Pico-	p (uu#)	10**-12
Femto-	f	10**-15

frequently used in the United States

1.7.3
Code letters and colors

Resistors

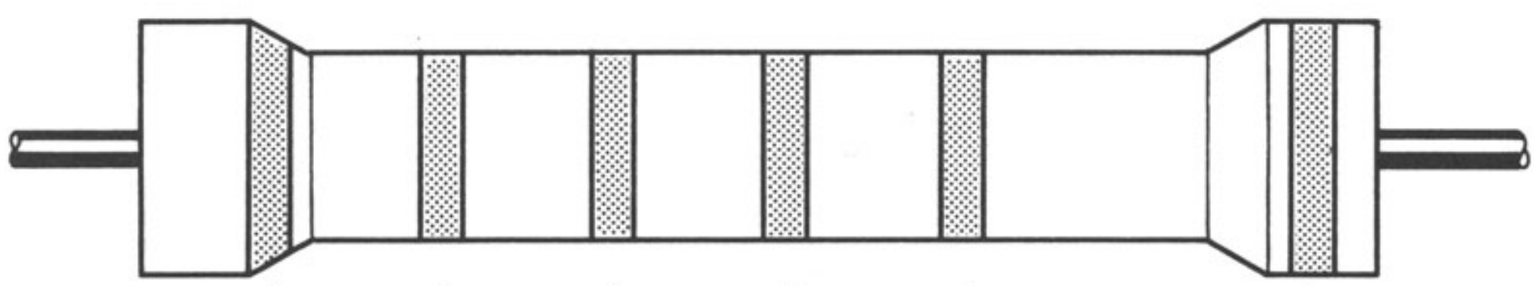

Standard-series:

E6 }
E12 } 1.Digit 2.Digit Multiplier Tol. --- ---
E24 }

E48 1.Digit 2.Digit 3.Digit Multiplier Tol. TC

Colour	Digit	Multiplier	Tolerance	Temp.-coefficient
gold	-	0.01	5 %	-
silver	-	0.1	10 %	-
black	0	1	-	-
brown	1	10	1 %	100 * 10 ** -6 / K
red	2	100	2 %	50 * 10 ** -6 / K ##
orange	3	1 k	-	15 * 10 ** -6 / K
yellow	4	10 k	-	25 * 10 ** -6 / K
green	5	100 k	0.5 %	-
blue	6	1 M	0.25 %	-
violet	7	10 M	0.1 %	-
grey	8	-	-	-
white	9	-	-	-

either no mark for temperature coefficient, or red

Capacitors

The tolerance category is sometimes specified by a letter after the rated capacitance.

D = 0.5 %
F = 1 %
G = 2 %
J = 5 %
K = 10 %
M = 20 %

Inductors, transformers

Molded RF coils

A wide silver-colored ring and 4 thin, differently colored rings identify molded RF coils. The wide silver ring indicates the start of the counting direction. The second, third, and fourth ring indicate the inductivity in micro Henry (uH), where two of the three rings represent the numeric value, the third one either a multiplier or the decimal point. In the latter case it has a golden color. The fifth ring identifies the tolerance in percent (plus/minus).

Examples:

Colour	Digit	Multiplier	Tolerance
black	0	1	-
brown	1	10	1 %
red	2	100	2 %
orange	3	10**3	-
yellow	4	10**4	-
green	5	10**5	0.5 %
blue	6	10**6	-
violet	7	10**7	-
grey	8	10**8	-
white	9	10**9	-
gold	.	-	5 %
silver	-	-	10 %
no (nat.)	-	-	20 %

Examples:

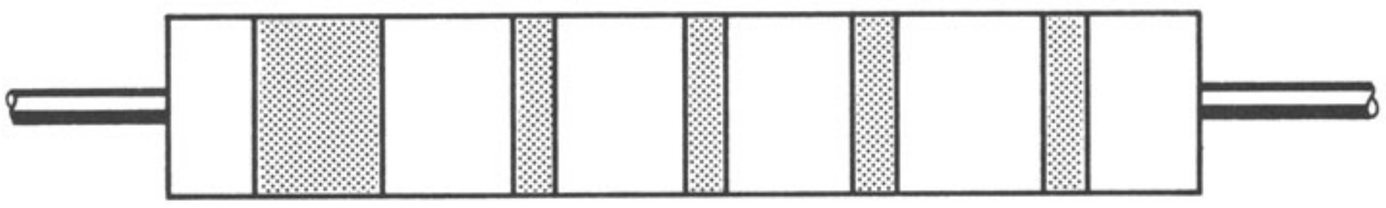

silver	gold*	brown	green	silver	= 0.15 uH 10%
silver	red	gold*	violet	---	= 2.7 uH 20%
silver	grey	red	brown**	gold	= 820 uH 5%

* Decimal point
** Multiplier

Inductors, transformers on ferrite cores

Inductors and transformers on ferrite cores are marked with three colored dots (for color code refer to table in the Section "Resistors", two left-hand columns). These dots represent the last three digits of the STUDER standard number, the large dot identifies the start. The first digits of the standard number (1.022.---) are always the same.

E.g.: Driver transformer, 150 kHz
Standard number: 1.022.211
Color code: red (large colored dot), brown, brown

Terminal 1 of the winding form is usually identified by a lobe; if not the winding form features a yellow dot near terminal No. 1.

1.7.4
Electrostatically sensitive semiconductor devices

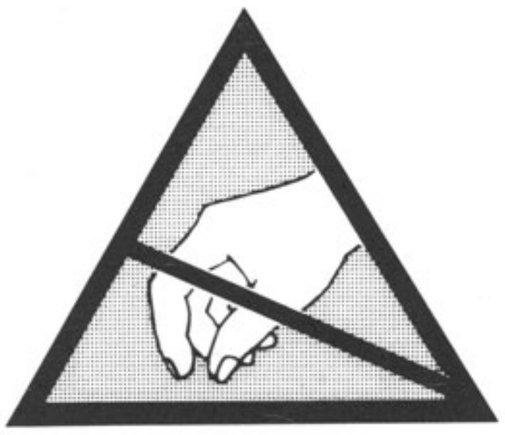

MOS (Metal Oxide Semiconductor) devices are very sensitive to electrostatic charges. The following precautions should, therefore, be observed:

1. Electrostatically sensitive semiconductor devices and assemblies ("ESE") are stored and shipped in protective packing material. This protective packing is identified with the label illustrated above.

2. Strictly avoid contact of the mounting pins with plastic bags and foils or other statically chargeable materials.

3. Ensure that your wrist ist grounded before touching the mounting pins.

4. Use a grounded, conductive plastic pad as a work surface.

5. Never unplug or insert printed circuit boards while the recorder is under power! The recorder must have been switched off for at least 5 seconds before any PCBs are pulled out or inserted!

SECTION 2 INSTALLATION, PUTTING INTO OPERATION

QUICK-REFERENCE DESCRIPTION

2.1	UNPACKING AND TESTING	2/1
2.2	PLACE OF INSTALLATION	2/1
2.3	INSTALLING THE TAPE RECORDER	2/1
2.3.1	Portable versions	2/1
2.3.2	Installation into console	2/2
2.4	CONNECTOR PANEL	2/4
2.4.1	AC Power, voltage selector	2/4
2.4.2	Line input	2/5
2.4.3	Line output	2/5
2.4.4	Connectors for VU meter panel	2/6
2.4.5	Remote control connectors	2/7
2.4.6	Headphones socket	2/9
2.5	OPERATING INSTRUCTIONS	2/10
2.5.1	Controls	2/10
2.5.2	Power switch	2/11
2.5.3	Tape timer	2/11
2.5.4	Pilot lamps	2/11
2.5.5	Mounting the tape	2/12
2.5.6	Tape speeds	2/14
2.5.7	Play mode	2/14
2.5.8	Recording mode	2/14
2.5.9	Sync reproduction	2/15
2.5.10	Spooling mode	2/15
2.5.11	Stop mode	2/16
2.5.12	Autolocator	2/17
2.5.13	Dump editing	2/17
2.5.14	Monitor	2/18
2.5.15	Tape timer	2/18
2.5.16	VU-meter panel	2/18
2.5.17	Remote controls	2/19
2.5.18	Mono-Stereo switch (option)	2/19
2.5.19	Test generator (option)	2/19
2.5.20	Time code channel (option)	2/20
2.5.21	Vari speed control (option)	2/20
2.6	EDITING, SPLICING	2/21
2.6.1	Procedures for searching a tape address	2/21
2.6.2	Cutting the tape	2/22
2.6.3	Splicing the tape	2/23
2.7	DEGRADED OPERATION	2/24
2.7.1	Error messages appearing on the tape timer display	2/24
2.8	OPERATION WITH SERIAL INTERFACE	2/26
2.8.1	STUDIO Bus	2/26
2.8.2	Data protection	2/26
2.8.3	RS 232 interface	2/26
2.9	DAILY CARE	2/30

2. INSTALLATION, PUTTING INTO OPERATION, QUICK-REFERENCE DESCRIPTION

2.1 UNPACKING AND TESTING

The A810 tape recorder is delivered in special packing material which protects it from damage in transit. Care should be exercized when unpacking the recorder so that the equipment surfaces will not become marred.

Compare the content with the packing slip to ensure that the equipment is complete. Save the original packing material since it provides the best protection for your recorder for subsequent shipment.

Examine the complete content for possible transit damage. The forwarding company and the nearest STUDER dealer should be notified immediately in the event of damage.

2.2 PLACE OF INSTALLATION

The A810 tape recorder should be installed in a well ventilated location that is as dust-free as possible. The recorder specifications are guaranteed for ambient temperatures ranging from 0 to 40°C. The relative humidity (dry bulb) should range between 50 and 90%.

The recorder must not be placed in close proximity to strong electromagnetic fields. General sources of such interference are: strong load fluctuations on adjacent power lines, high-power transformers, elevator motors, as well as nearby radio and television transmitters.

Install the recorder in a location where there is sufficient clearance around it so that the cooling air can circulate freely. The minimum clearance at the ventilating louvers is 15 mm, at the lateral heatsinks 10 mm.

2.3 INSTALLING THE TAPE RECORDER

The equipment specifications are guaranteed for any operating position between vertical and horizontal.

2.3.1 Portable versions

After unpacking and visual inspection, the recorder can be installed in the desired place without further mechanical preparations.

2.3.2
Installation into console

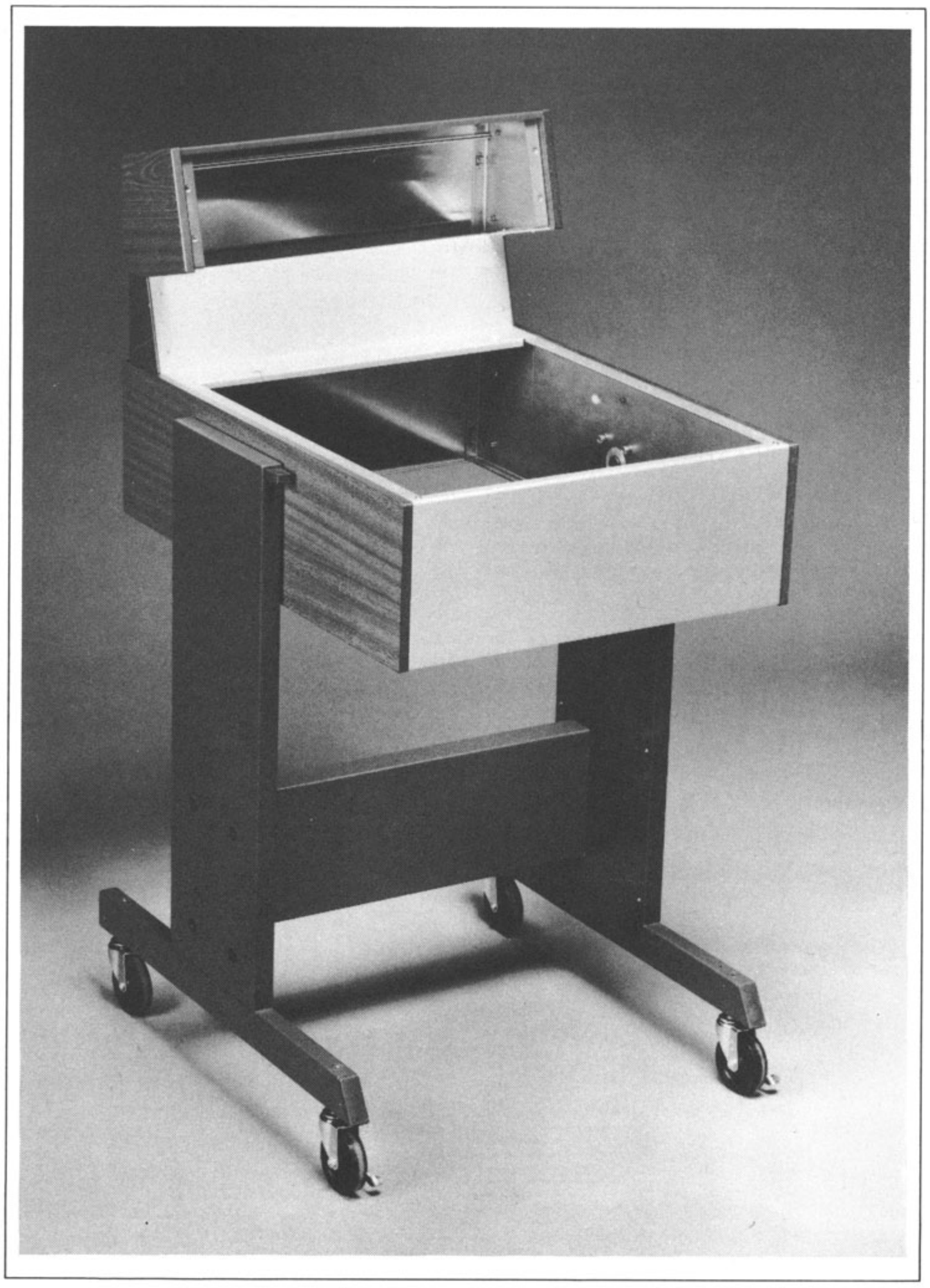

Procedure:

- Position console horizontally.
- Remove front panel of the console (4 screws M4, hexagon-socket-screw key 2.5 mm).
- Carefully slide recorder in from the front and secure with 4 slotted-head screws M6.
- Reinstall cover.

Consoles with penthouse:
- Guide cable harness and flat cable of the panel from the top through the penthouse
- Secure panel with 4 slotted-head screws M6.
- Position console vertically (maintenance position). The connector panel of the tape recorder becomes accessible. Plug in cable harness and flat cable (two 25-pin connectors).

2.4
CONNECTOR PANEL

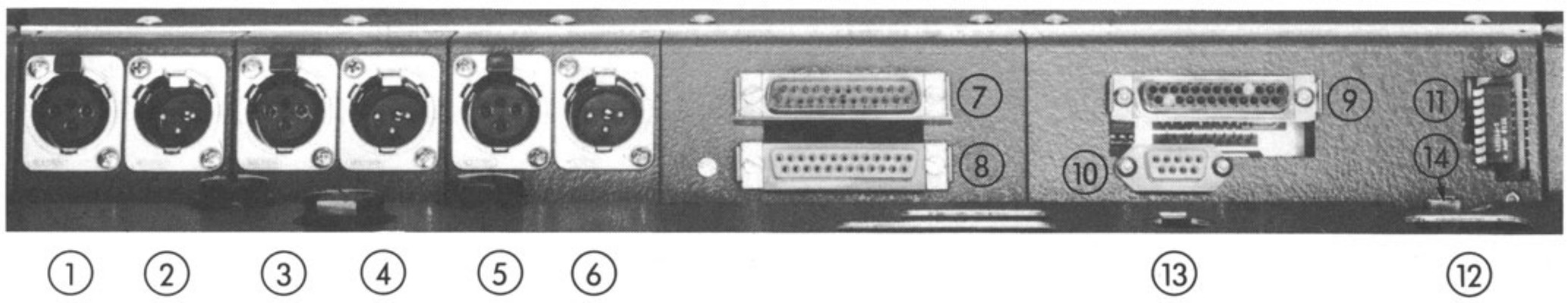

(1) Audio input CH1
(2) Audio output CH1
(3) Audio input CH2
(4) Audio output CH2
(5) Time code channel input
(6) Time code channel output
(7) Connector for VU panel (audio)
(8) Connector for VU panel
(9) Connector for parallel remote control
(10) Connector for serial remote control
(11) Address board
(12) AC power inlet
(13) Voltage selector
(14) Ground socket

2.4.1
AC Power, voltage selector

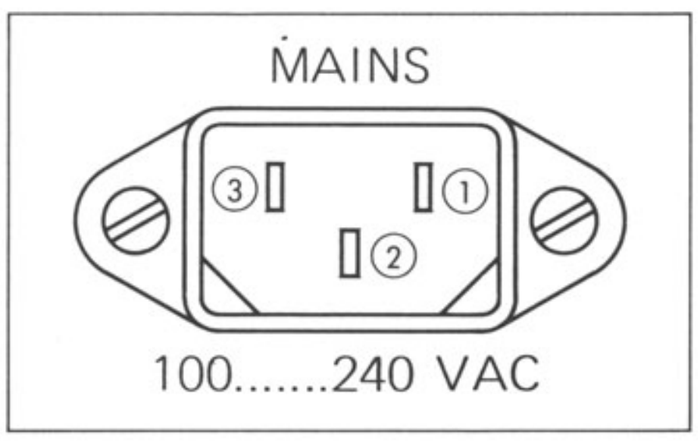

No. 1 Phase
No. 2 Ground
No. 3 Neutral

CAUTION

Before the recorder is connected for the first time, verify that the setting of the voltage selector on the rear panel of the recorder matches the local line voltage.

One of the following lines voltages can be selected:
100, 120, 140, 200, 220, 240 VAC

Remove the power fuse before changing the voltage selector setting. Check the rating of the fuse before you reinstall it:

100 ... 140 VAC: 3.15 A s/b
200 ... 240 VAC: 1.6 A s/b

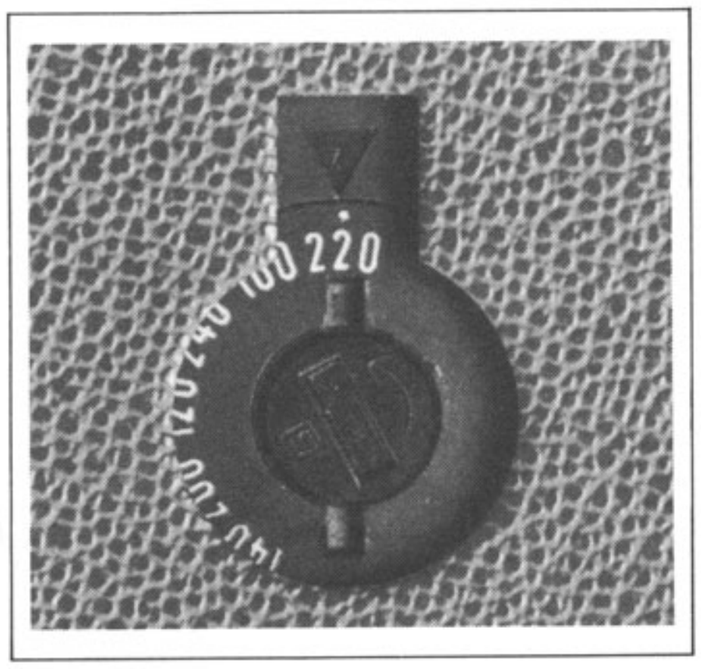

2.4.2
Line input

The balanced inputs are terminated on XLR-type sockets conforming to the IEC recommendation 268-14.

No. 1 Audio ground
No. 2 A-line (hot)
No. 3 B-line (cold)

(The A line is hot if the recorder is connected to an unbalanced source.)

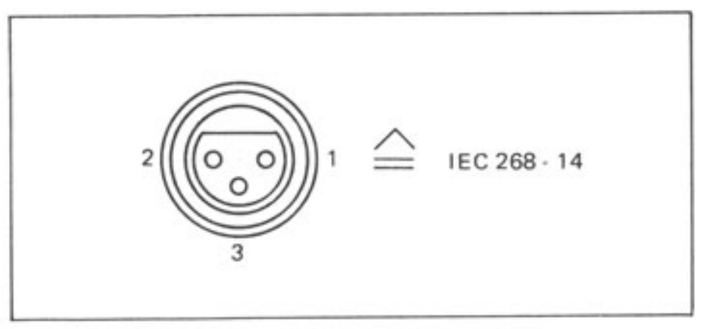

2.4.3
Line output

The balanced outputs are terminated on XLR-type jacks conforming to the IEC recommendation 268-14.

No. 1 Audio ground
No. 2 A-line (hot)
No. 3 B-line (cold)

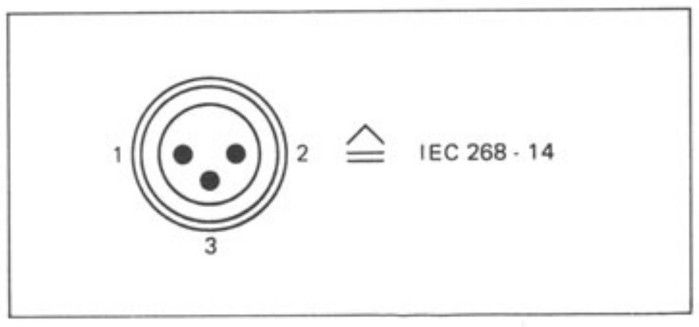

2.4.4
Connectors for VU-meter panel

Two 25-pin connectors (subminiature, type D) are used for connecting the external VU-meter panel.

Cap for 25-pin male/female connector casing	Part No. 54.02.5461
Locking spring	Part No. 54.02.5469
Locking hook	Part No. 54.02.0470
25-Pin male connector casing	Part No. 54.02.0447
Connector pin, crimp, 0.08 ... 0.29 mm2	Part No. 54.02.0451
Connector pin, crimp, 0.22...0.55 m2	Part No. 54.02.0455
25-Pin female connector casing	Part No. 54.02.0442
Pin bushing, crimp, 0.08...0.29 mm2	Part No. 54.02.0450
Pin bushing, crimp, 022...0.55 mm2	Part No. 54.02.0454

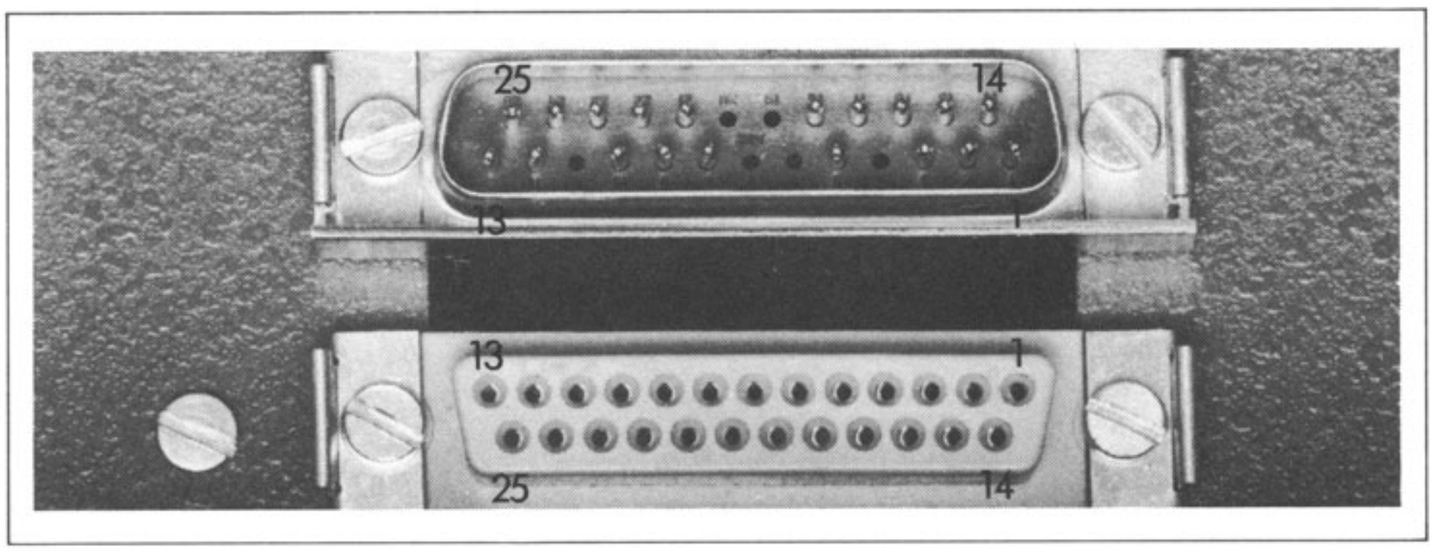

Signal names of connector GR 34 (audio, male):

01	TAPMS-01
02	+ 0.0
03	INPAD-01
04	-
05	LOUFA-01
06	-
07	-
08	TAPMS-02
09	+ 0.0
10	INPAD-02
11	-
12	LOUFA-02
13	GND
14	TAPAD-01
15	+ 0.0
16	INPDI-01
17	+ 0.0
18	LOUFB-01
19	-
20	-
21	TAPAD-02
22	+ 0.0
23	INPDI-02
24	+ 0.0
25	LOUFB-02

Signal names of connector GR 33 (digital, female):

01	+ 0.0
02	+ 5.6
03	+ 15.0
04	T-SADA
05	T-SADC
06	T-WRTSL
07	T-DT-CH2
08	T-DT-MP
09	-
10	-
11	T-VARSPD
12	T-REFEXT
13	+ 0.0
14	+ 0.0
15	+ 5.6
16	- 15.0
17	T-SADB
18	T-READSL
19	T-DT-CH1
20	T-DT-CH3
21	-
22	-
23	+ 0.0
24	+ 0.0
25	+ 24.0

2.4.5
Remote control connectors

A parallel remote control with the following features can be interfaced through a 25-pin connector (subminiature, type D):

- Remote control of tape transport functions with acknowledgement
- Storing and automatic searching of address LOC 1
- Varispeed control
- Fader start control for playback
- Tape lift defeat (momentary push button)

Connector set	Part No. 20.020.303.06
25-Pin connector casing, coded	Part No. 10.217.001.04
Cap for 25-pin connector casing	Part No. 54.02.5461
Locking spring	Part No. 54.02.5469
Locking hook	Part No. 54.02.0470
Connector pin, crimp, 0.08...0.29 mm2	Part No. 54.02.0451
Connector pin, crimp, 0.22...0.55 mm2	Part No. 54.02.0455

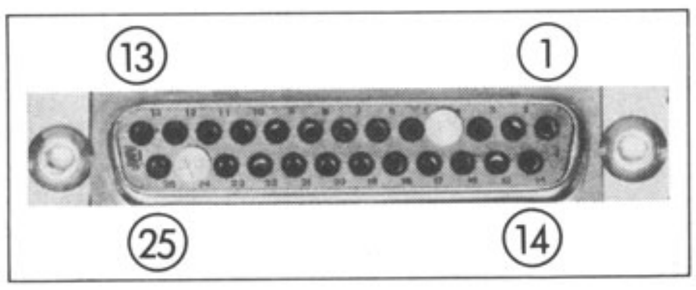

Signal names of parallel remote control connector GR 23 (female):

01	+ 0.0
02	BR-REW
03	BR-FORW
04	KEY
05	SR-VRSPD
06	SR-TRANS
07	TO-CLK
08	BR-FAD
09	BR-REC
10	TO-DIR
11	FAD1
12	FAD2
13	T-REFEXT
14	+ 0.0
15	BR-PLAY
16	BR-STOP
17	SR-LIFT
18	SR-LOC 1
19	SR-REC
20	SR-REW
21	SR-FORW
22	SR-PLAY
23	SR-STOP
24	KEY
25	+ 24.0

Note:

If light bulbs are used as acknowledgment lamps, their inrush current should not exceed 0.3 A!

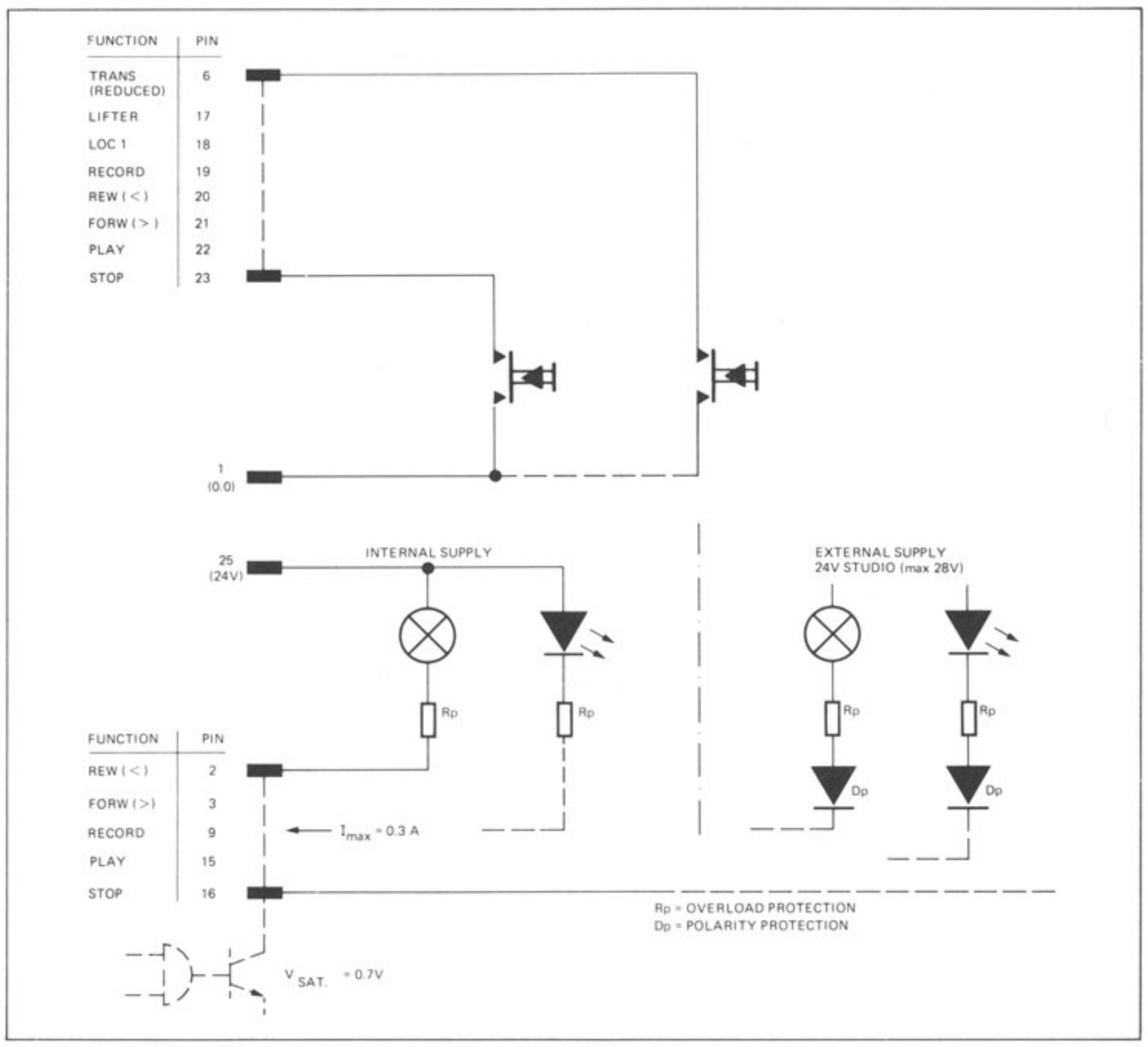

REMOTE CONTROL CIRCUIT

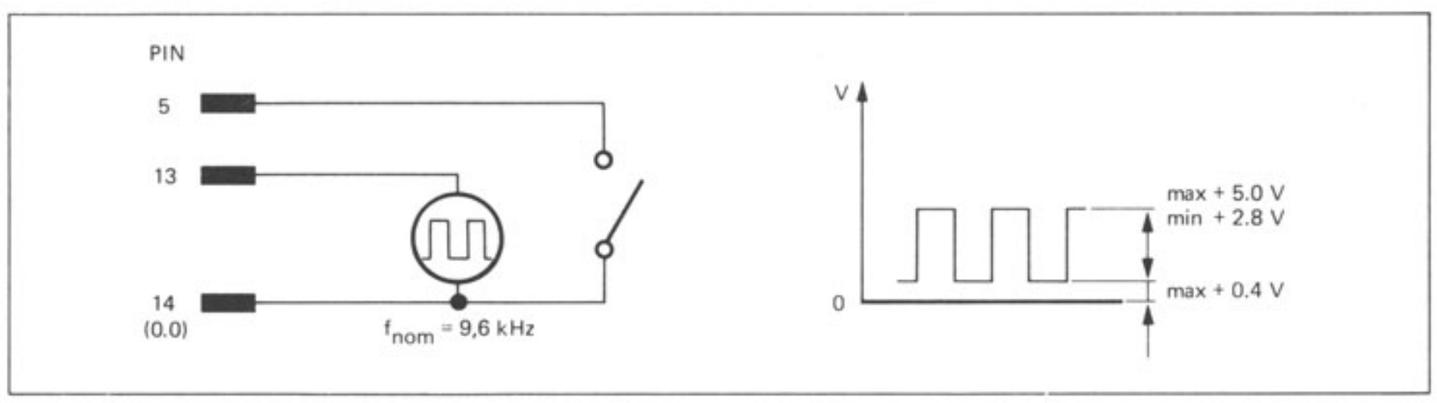

VARISPEED CONTROL

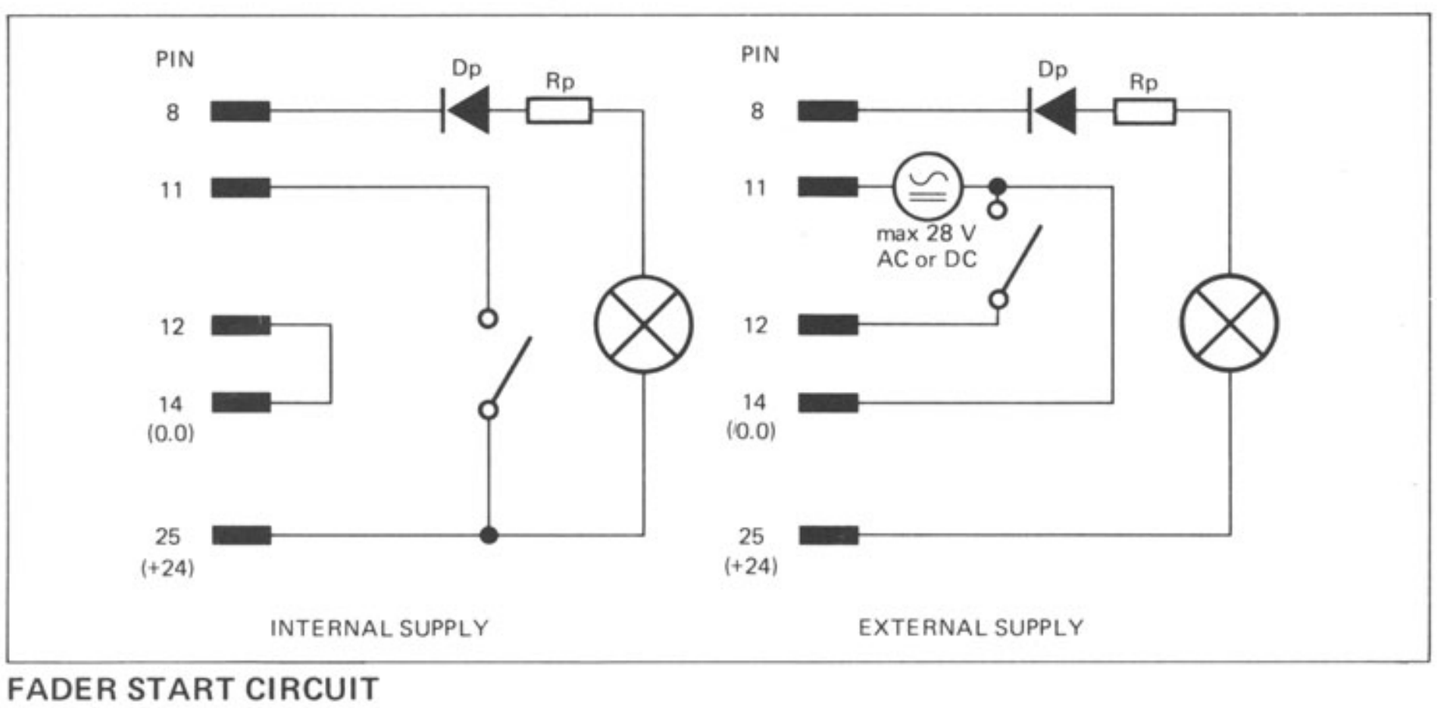

FADER START CIRCUIT

The serial remote control connector (9-pin, subminiature type D) can be used to connect a tape recorder for saving the stored audio parameters or a terminal equipped with an RS 232 interface. The signal assignment corresponds to the EIA recommendation 449.
For change-over refer to Section 4.2.9.

Cap for 9-pin connector casing	Part No. 54.02.0459
Locking spring	Part No. 54.02.5469
Locking hook	Part No. 54.02.0470
Connector casing, 9-pin	Part No. 54.02.0445
Connector pin, crimp, 0.08...0.29 mm2	Part No. 54.02.0451
Connector pin, crimp, 0.22...0.55 mm2	Part No. 54.02.0455

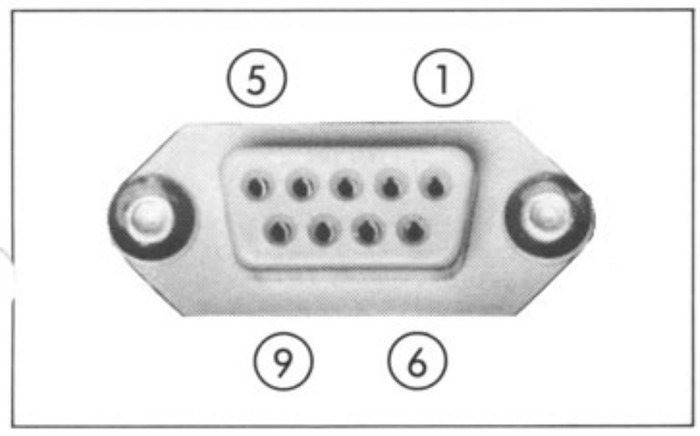

Signal names of serial remote control connector GR 22 (female):
01 SHIELD
02 SNDATA
03 RCCOMM
04 STUBUS1
05 N.C.
06 STUBUS2
07 SNCOMM
08 RCVDATA
09 GND

Pins for transferring the audio parameters:
1, 4, 6

Pins for RS 232 interface connection:
2, 3, 7, 8, 9

2.4.6
Headphones socket

TIP = left
RING = right
SLEEVE = Ground

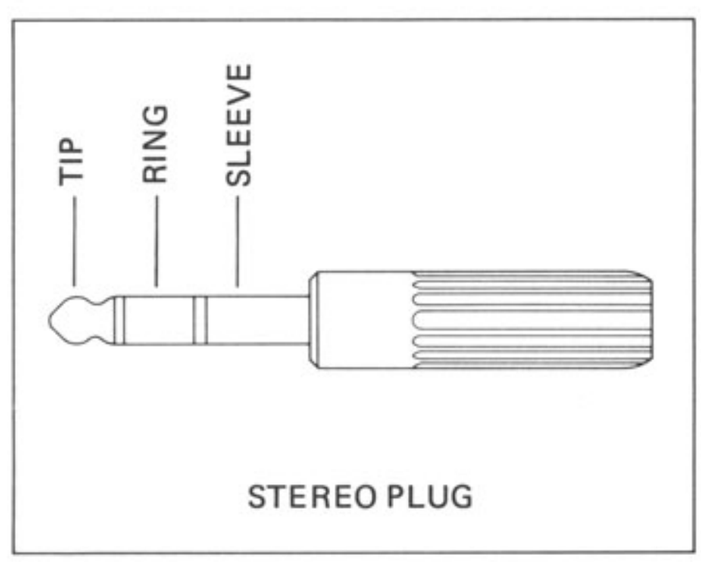

2.5 OPERATING INSTRUCTIONS

2.5.1 Controls

(1) Power switch ON/OFF
(2) Left-hand spindle (supply motor)
(3) Right-hand spindle (take-up motor)
(4) Tape lift slider
(5) Pressurer roller: For easier editing it can be manually shifted toward the capstan during spooling.
(6) Head shield, can be closed or opened manually.
(7) Tape timer display, 4 1/2 positions (LCD) or 5 positions (LED) with leading negative sign.
(8) RESET TIMER: Reset key for (7).
(9) ZERO LOCATOR: Initiates automatic search of tape address 00.00.
(10) TRANS <REDUCED>: Multifunction key:
(a) Pressed in conjunction with LOC 1...LOC 4, the momentary tape address is transferred into memory;
(b) pressed in conjunction with one of the spooling keys < or >: reduction of spooling speed in three steps;
(c) pressed in conjunction with ZERO LOC: the cummulative operating hours of the machine are displayed.

(11) LOC 1: the address stored with (10) is automatically searched. The LOCATE address is displayed (min. 2 s) while this key is held.
(12) LOC 2: same as LOC 1
Or
LOC START: Automatic search of the tape address at which the play or the record function was last entered from STOP or spooling mode.
Or
LIFTER: Defeating the tape lift during spooling (internally programmable as a momentary or flip-flop push button).
Or
FADER: Change-over key for fader start. Disables local keyboard.
Or
TAPE DUMP: dump edit mode, right-hand spooling motor is switched off.
(13) LOC 3: same as LOC 1
Or
LOC START, LIFTER, FADER, TAPE DUMP
Or
REM CONTR: Selector switch for parallel remote control. Local keyboard is disabled.
(14) LOC 4: same as LOC 1
Or
LOC START, LIFTER, FADER, TAPE DUMP, REM CONTR
or CODE READY: recording on time code channel enabled.
(15) < Rewind key.
(16) > Fast forward key
4 Spooling speeds: If TRANS <REDUCED> is pressed in conjunction with < or >, the recorder switches to the next lower spooling speed. When activated in STOP or PLAY mode: after pressing < or >, the recorder starts spooling at the lowest speed (1 ms/s). Can be cancelled with TRANS, STOP or PLAY.
(17) PLAY: Activates reproduce mode.
(18) STOP: has priority over all tape transport commands, enables recorder for fader start. If STOP is pressed in conjunction with LOC START or LOC1 ... 4, the stored locator addresses are displayed. If STOP is pressed in conjunction with ZERO LOC, the cummulative operating hours of the recorder are displayed.
(19) REC: record key, only effective in conjunction with PLAY. Record drop-in (internally programmable): recording mode can be entered directly from playback by pressing REC.
(20) PHONES: headphones socket (stereo).
(21) CCIR/NAB: Switch for selecting equalization at 7.5 or 15 ips
(22) MONO/STEREO: Switch for selecting mono or stereo mode.
(23) 15 ips / 7.5 ips (or other speed combination): Switch for selecting tape speed, or rotary switch on 4-speed versions
(24) CH 1: Channel 1 is connected to the monitor speaker.
(25) CH 2: Channel 2 is connected to the monitor speaker.
Both channels can be connected simultaneously to the monitor speaker.
(26) MONITOR: Volume control for monitor speaker.
(27) Level meter: Instrument internally switchable to VU or peak program (PPM) indication.
(28) REPRO/SYNC LEVEL: Gain control for reproduction or sync reproduction.
(29) RECORD LEVEL: Record level control.
(30) UNCAL: Switched on: level control enabled. Switched off: calibrated line level.

Output selector switches:

(31) INP: Input signal
(32) SYNC: Sync signal
(33) REP: Reproduce signal

Track mode selector switches:

(34) SAFE: recording on channel disabled.
(35) READY: Recording on channel enabled.
(36) REC lamp: Record pilot lamp, lights up after PLAY and REC have been pressed.

2.5.2
Power switch

CAUTION!

Before switching on the recorder, check that the setting of the AC voltage selector on the back of the recorder matches the local line voltage.

If the setting of the AC voltage selector is changed, also check the rating of the power fuse.

The power switch is located at the top edge of the tape transport cover. The recorder is switched on by shifting the switch handle to the right (-). To switch the recorder off, shift the switch handle to the left (0).

The previous operating status is automatically reestablished and indicated after the power is switched on.
Exceptions: The recorder always enters STOP mode.
Recorders equipped with a SAFE/READY selector are switched to SAFE.
The main functions are automatically tested by the microprocessor after the power-on sequence.

2.5.3
Tape timer

The tape timer consists either of a 4 1/2 position LC display or a 5-position LED display. It indicates the momentary tape position as real-time hours, minutes and seconds for all tape speeds. Values less than zero are identified by a leading negative sign.
Indicating range: -1 h 59 min 59 s to 1 h 59 min 59 s (LC display)
- 59 min 59 s to 9 h 59 min 59 s (LED display)
Fractional seconds are rounded up or down

After the recorder is switched on, a date (calender week and year) is displayed first. This is the release date of the software (program) stored in the microprocessor. The last tape address displayed before the machine was switched off appears after 1 second.

In time code versions equipped with the LED tape timer and the new time code amplifier 1.820.719 (in development), the last decimal point (far right) is illuminated when a code signal is available at the input or being read from tape (depending on setting of INP/SYNC/REP selector switch).

Faulty operation of the recorder is indicated by a combination of letters and numbers.
Examples:
1:01:56 (LCD) or 1.01.56 (LED) indicates last tape address, recorder is functioning correctly.
:01:56 Upper display range exceeded (LCD),
- :01:56 Lower display range exceeded (LCD),
H.01.56 Upper display range exceeded (LED),
L.01.56 Lower display range exceeded (LED), recorder ready.
EE 01 (LCD) or EEE01 (LED) indicates that some of the stored parameters are lost. Refer to DEGRADED OPERATION, Section 2.7.

2.5.4
Pilot lamps

Any number of pilot lamps as well as READY or REC can briefly turn on after the microprocessor has been started. The recording function is electronically disabled during this sequence. The following pilot lamps (LEDs) turn on to indicate the current operating status of the tape recorder:

STOP: Stop function is active. If this LED flashes, both tape tension sensor are in their end positions (no tape present or threaded loosely).

CCIR or NAB: indicates the type of equalization selected.

STEREO or MONO
or on recorders without mono/stereo selector switch,
TAPE A or TAPE B: tape bias selector.

Tape speed: e.g. 15 or 7.5 ips.

The following are illuminated, depending on the features of the recorder:
- Level meters
- On track mode switch: SAFE
- On output selector switch: selected output (INP, SYNC or REC)
- UNCAL (if selected).

2.5.5
Mounting the tape

Three-pronged reel with flange:

(DIN 45514, 45517)
Mount full reel on the left-hand spindle, the empty reel on the right-hand spindle. Pull out three-pronged guide and lock it with a 60° rotation.

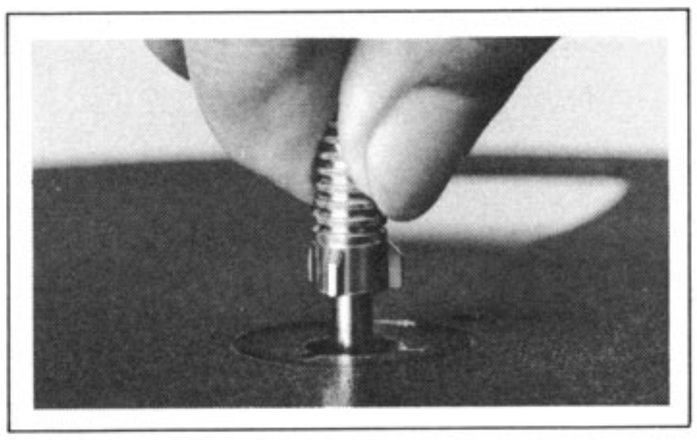

NAB reel:

Mount NAB adapters on spindles and lock three-pronged guides.
Mount NAB tape reel (or NAB hub if self-supporting pancake is used) on the adapter and rotate top section of adapter clockwise until it locks in place.

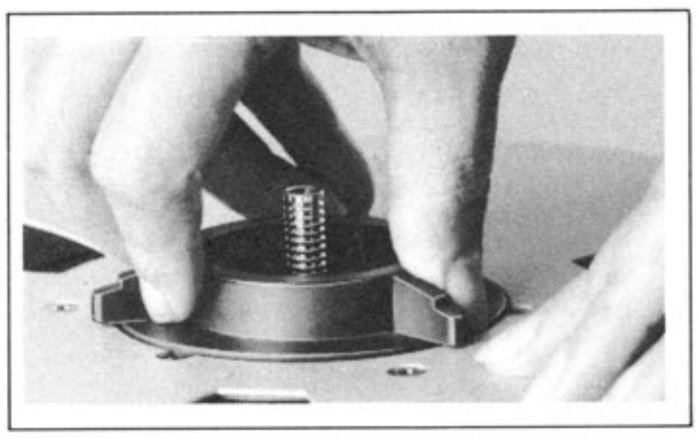

Self-supporting pancake:

(According to DIN 45515)
Set pancake platters on spindles, engage the two driving lugs of the platter into the holes of the spindle and lock three-pronged guide.

Mount full pancake on the left-hand side, lift flap and rotate it by 90° until it rests on the guide pins. Repeat preceding steps for mounting a pancake platter and an empty hub on the right-hand side.

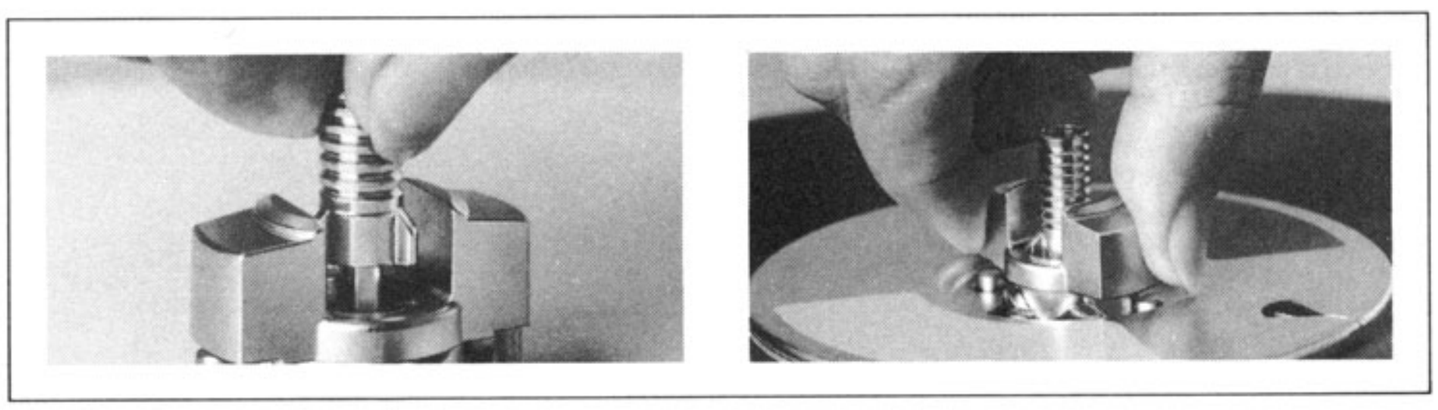

Threading the tape:

IMPORTANT:
The head shield must be lifted off the soundheads before threading the tape.

Thread tape according to illustration. The leading tape end is placed on the right-hand reel and secured with a few counterclockwise rotations. Tapes with a transparent leader should be wound forward to the start of the oxide coating. Set tape timer to zero by pressing RESET TIMER.
Lower shield to cover soundheads.

2.5.6
Tape speeds

Two or four tape speeds are possible in the following combinations:

- Slow version (with 4-pole capstan motor):
  3.75 ips and 7.5 ips
  or
  3.75 ips and 15 ips
  or
  7.5 ips and 15 ips
  (Any of the three combinations is internally programmable)

- Four-speed version (with 2-pole capstan motor):
  9.5 ips, 7.5 ips, 15 ips, and 30 ips.
  The wow-and-flutter for the slowest tape speed (3.75 ips) will be slightly inferior to the values achieved with a 4-pole capstan motor.

The tape speed is selected by pressing the speed button (or by turning the rotary switch of the 4-speed version). The corresponding indicator lamp or the indicator "PLL CAPSTAN" turns on, as soon as the capstan motor has reached its nominal speed.

2.5.7
Play mode

The recorder is switched to play mode either with the local PLAY key, a remote control key or a fader start device, and the lamp above the PLAY key turns on.

The programmable keys FADER and REM CONTR disable the local PLAY key.

The play mode can be cancelled by pressing the STOP button.

If the PLAY key is pressed in record mode, the recorder switches immediately to reproduce mode.
If the PLAY key is pressed during spooling, the recorder enters STOP mode (PLAY and STOP lamps turn on). The play function is automatically activated as soon as the tape has reached the nominal speed.

It is possible to switch from reproduce mode directly to spooling mode or an autolocator function.

2.5.8
Recording

The machine is put into recording mode by simultaneously pressing PLAY and REC. The lamps above these two keys turn on.

The record function is cancelled by pressing the STOP key.

If PLAY and REC are pressed during spooling, the recorder enters stop mode (the lamps above PLAY, REC and STOP turn on). Recording mode is automatically activated as soon as the nominal tape speed is reached.

It is possible to switch from the record function directly to spooling mode or an autolocator function.

Recorders with SAFE/READY switch:

Recording on corresponding channel can be disabled by pressing the SAFE button. The yellow SAFE lamp turns on. When PLAY and REC are subsequently pressed, the tape transport starts, however, the signals recorded on the track protected with SAFE are retained and can be monitored (REP or SYNC).

Recording on a channel is only possible after the corresponding READY button has been pressed. The green READY lamp turns on. When the record function is activated by pressing PLAY and REC, the red REC lamp turns on to signal that recording is in progress.

The SAFE function can be enabled for either channel while a recording is in progress. To reenable recording on this channel, the READY button must first be pressed. After the READY lamp turns on, either the PLAY and the REC key or only the REC key must be pressed, depending on the internal programming.

On 2-channel recorders, the internal programming determines whether this feature works on both channels in parallel or separately for each channel.

Drop out from record mode:

Click-free change-over from record to reproduction or sync reproduction is possible with the PLAY key. Depending on the internal programming, the erase and the record head are either switched off concurrently or the record head switches off with a speed-dependent delay so that the drop-out occurs exactly at the same tape location.

Drop-in:

Click-free change-over from reproduction to sync reproduction or recording is possible. Two methods can be implemented through internal programming: PLAY and REC must be pressed concurrently or the recording function is activated by REC alone (prerequisite: the machine is already in play mode!). Depending on the internal programming, the erase head and the recording head are either switched off concurrently or the recording head switches off with a speed-dependent delay so that the drop-in occurs exactly at the same location.

Overlapping drop-in "FADE IN/FADE OUT" (mechanical):

If e.g. an applaus is to be faded in at the end of a production, the tape can be lifted off the erase head with the tape lift slider (4). The machine is subsequently started in record mode. When the slider is slowly released, the tape contacts the record head first, e.g. the new modulation is added to the existing signals (e.g. music selection). After the music selection has faded away, the tape lift slider is released completely so that the tape comes in contact with the erase head. Unwanted noise will be eliminated and only the applaus is recorded.

2.5.9
Sync reproduction

Sync reproduction mode is entered by pressing the SYNC button. In this mode, the tape induces an audio signal in the recording. This signal is amplified and equalized in the reproduce amplifier.

Accurate drop in is possible since there is no speed-dependent offset between the record and the reproduce head.

The bandwidth for sync reproduction is limited to approx. 12 kHz. For special mixdowns it is possible to extend the bandwidth to 20 kHz with the aid of a jumper (refer to Section 4.2.9). At frequencies above 12 kHz, strong cross talk from the audio channel to the sync reproduction channel must, however, be expected.

Sync preselection:
A channel that has been switched to recording mode cannot be switched to sync reproduction. If the SYNC button is pressed during a recording, the output of the corresponding channel is connected to the input (INP). This channel is automatically switched to sync reproduction when the recording mode is cancelled (PLAY, SAFE, STOP).

2.5.10
Spooling mode

Rewinding is activated by pressing the < key; fast forward by pressing the > key. The corresponding pilot lamp turns on.

The spooling function is cancelled by pressing the STOP key.

Direct change-over from rewind to fast forward and vice versa or from reproduction or recording to spooling is possible.

It is possible to switch from spooling mode directly to recording or reproduction. The pilot lamp of the selected function turns on, the tape is braked, and the new function is activated as soon as the tape travels at the nominal speed.

Decreasing the spooling speed:

The search for a specific tape address can be made easier by decreasing the spooling speed from 10 m/s (standard) to 7, 4, or 1 m/s.

This is accomplished by pressing <TRANS REDUCED>, followed by one of the spooling keys.

TRANS <REDUCED> is active as long as the corresponding pilot lamp is on.

Example:
In order to decrease the maximum spooling speed to 1 m/s, the keys are pressed in the following order: TRANS <REDUCED> and 3 times < or >.

The slowest spooling speed can be activated directly from STOP or PLAY: press TRANS <REDUCED> and the corresponding spooling key.

Spooling at full speed can be resumed by pressing TRANS (or STOP or PLAY).

Tape lift:

The tape is automatically lifted during spooling in order to minimize wear on the soundheads.

If the beginning or the end of a recording is to be searched, the pressure roller cover can be pressed manually against the capstan but the pressure roller cannot, however, touch the capstan. As a consequence, the tape lift pins are retracted, the tape is pushed against the heads and the modulation becomes audible.

The tape lift pins can be retracted electrically by pressing the LIFTER key (internally programmable as a momentary or flip-flop key).

2.5.11
Stop mode

The STOP key has top priority and cancels all other operating modes such as reproduction, recording, spooling, and autolocator. After this key has been pressed, the STOP pilot lamp turns on and tape braking is initiated.

When the tape has come to a stop, the braking torque is automatically decreased and the tape tension sensors are locked. This makes it easier to shift the tape for editing purposes.

Any new command entered while the tape is being decelerated will be stored and activated as soon as the tape has reached the nominal speed.

If STOP is pressed in conjunction with ZERO LOC, the cummulative operating hours of the machine are displayed. The STOP key can also be used in conjunction with the locator keys for reading out the locator addresses.

2.5.12
Autolocator

The following modes are supported by the autolocator function:

- ZERO LOC: Zerolocator. This key initiates a rewind (or fast forward) to the tape address corresponding to the timer reading 00:00.

- LOC START (programmable): This key initiates a rewind (or fast forward) to the tape address at which the last change-over from STOP or spooling to playback or recording occurred.

- LOC 1 ... LOC 4 (programmable): Transferlocator. Up to four tape addresses can be stored and automatically searched in spooling mode by pressing one of these keys.

  Programming:
  Search desired tape address and press the TRANS key when the approximate position has been reached. The address can be stored as long as the TRANS pilot lamp is on.

  As soon as the exact position has been found, press one of the keys LOC 1 ... LOC 4. The TRANS pilot lamp turns off to acknowledge that the address has been transferred into memory. The TRANS key must be pressed again before a new address can be stored.

  The stored addresses can be read out:
  Either by pressing the corresponding LOC key again after the search has been completed
  or
  by holding down the STOP key, followed by the corresponding LOC key.

PLAY PRESELECTION

If the PLAY key is pressed while a locate function is in progress (ZERO LOC, LOC START, LOC 1 ... 4), the recorder switches automatically to reproduction after the corresponding tape address has been found. Recording mode (REC) cannot be preselected.

All locate addresses are retained in memory even after the recorder has been switched off.

CAUTION!

Since the stored tape addresses relate to the tape timer content, undesirable offsets will occur if the RESET TIMER key is pressed unintentionally!

2.5.13
Dump editing

The right-hand spooling motor is switched off in dump edit mode and unusable tape segments can be played into the waste basket.

When the TAPE DUMP key (internally programmable) is pressed, the recorder switches to reproduction but the take-up motor is switched off.

In TAPE DUMP mode the tape must be pulled gently to the right until the pinch roller presses the tape against the capstan.

The TAPE DUMP function can be cancelled by pressing one of the command keys (e.g. STOP) or by pressing TAPE DUMP a second time.

2.5.14
Monitor

In portable or rack-mount versions the monitor speaker is built into the tape transport cover.

The button CH 1 connects channel 1 to the monitor speaker, button CH 2 connects channel 2 to the speaker. If both buttons are pressed, channels 1 and 2 are mixed by the monitor amplifier. The monitor speaker always reproduces the selected output (INP/SYNC/REP).

The volume can be adjusted with the MONITOR knob.

In console models the monitor speaker is built into the console panel. Change-over to reproduction or input is possible with the REPRO/INPUT selector (signal before corresponding volume controls). Channel 1 (CH 1), channel 1+2 (CH 1 + 2) or channel 2 (CH 2) can be monitored.

The volume can be adjusted with the MONITOR knob.

2.5.15
Tape timer

The electronic tape timer always displays the real time in hours, minutes, and seconds, regardless of the selected nominal tape speed.

The display capacity is -1 h 59 min 59 s to 1 h 59 min 59 s (for the LCD version) or -59 min 59 s to 9 h 59 min 59 s (LED version).

Values outside the display capacity are indicated without the hours digit on the LCD version, e.g. :56:20 or - :03:10; an "H" appears on the LED version in place of the hours if the value is too high or an "L" if the value is too low for indication, e.g. H.56.20 or L.03.10.

Fractional seconds are rounded up or down.

The tape timer stops automatically when the end of the tape is reached, if the tape tears, or in dump edit mode (TAPE DUMP).

The timer can be reset to 00.00 by pressing the RESET TIMER key.

In time code models equipped with a LED timer display and with the new time code amplifier 1.820.719 (in development), the right-hand decimal point (far right) is illuminated when a code signal is available at the input or is being read from tape (depending on the INP/SYNC/REP selector switch.

2.5.16
VU-meter panel

The level meter can be internally switched to function as a peak program meter (PPM) or a VU-meter.

UNCAL: When this button is pressed, the corresponding level control is activated and the pilot lamp turns on.

When the UNCAL button is released, the level control is bypassed and the input or the output level is set to line level.

Output selector:

INP: Connects the input signal of the recorder to the output and to the VU-meter.

SYNC: Connects the sync signal to the output and the VU-meter.
This mode can be preselected for the record function.

REP: Connects the reproduce signal to the output and the VU-meter.

Source/tape monitoring can be conveniently activated during recording by pressing the INP and REP buttons.

The INP, SYNC, and REP buttons always cancel each other.

In 2-channel models, the operating procedure is determined by the internal programming, i.e. it affects either both channels together or each individual channel.

2.5.17
Remote controls

The tape recorder can be started remotely in play mode with the aid of the fader start circuit.

The following functions can be activated remotely from the parallel remote control: reproduction, recording, spooling, stop, LOC 1, and LIFTER (defeating the tape lift during spooling).

A Operation with programmable keys FADER and/or REM CONTR:
When one of these keys is pressed, the corresponding pilot lamp turns on, the local keyboard is disabled.

If FADER or REM CONTR is pressed a second time, the local keys are reactivated and the pilot lamps turn off. The fader start switch and the remote control switch are disabled in this condition.

B Operation without FADER and/or REM CONTR keys:
The fader start circuit is only enabled if the recorder is in STOP mode.

The remote control keys and the local keys have equal priority.

2.5.18
Mono-Stereo switch (option)

Stereo models can be equipped with a mono/stereo switch. The last operating mode in effect will be automatically reestablished and indicated after the recorder is switched on.

The MONO/STEREO button is a flip-flop switch, i.e. it changes from mono to stereo or vice versa. This switch can be actuated in any operating mode.

If the mono/stereo module is not installed, the corresponding pilot lamps STEREO and MONO remain dark.

2.5.19
Test generator (option)

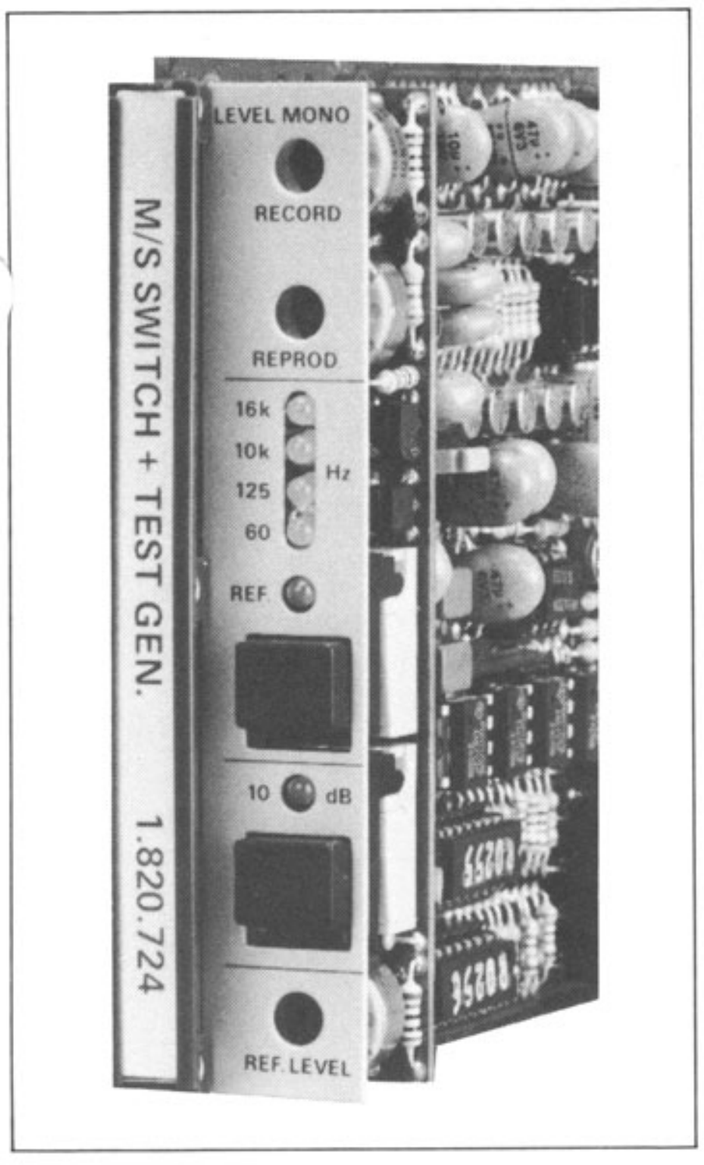

The test generator is switched on by pressing the FREQUENCY button (REF pilot lamp turns on, i.e., the reference frequency, normally 1 kHz, is selected). The following switch settings can be established by repetitive pressing of this button:
- 60 Hz - 125 Hz - REF - 10 kHz - 16 kHz - OFF - REF - 60 Hz - etc.

The generator level (-10 dBm or 0 dBm) can be selected with the LEVEL button. (In the -10 dBm position the gain in the reproduce branch of the mono/stereo switch is automatically boosted by 10 dB; when measuring with tape, the reference value of the VU-meter reading is, therefore, again 0 dB.)

The LEVEL button functions only after the test generator has first been switched on with the FREQUENCY button.

2.5.20
Time code channel (option)

In stereo recorders without built-in time code operating unit, the time code channel (INP/SYNC/REP switch) is always controlled in parallel with the two audio channels.

In 2-track versions without built-in time code operating unit, the time code channel (INP/SYNC/REP) is always controlled in parallel with audio channel 1. For example if sync reproduction is to be achieved for audio channel 2, audio channel 1 will have also to be switched to sync reproduction.

Time code recording

On recorders without built-in time code operating unit, press the (internally programmable) CODE READY key (pilot lamp turns on). Recording can subsequently be started by pressing PLAY and REC. If recording is already in progress, time code recording is activated by pressing CODE READY and REC + PLAY. (CODE READY pilot lamp flashes).

On recorders equipped with a time code operating unit, press the READY button (READY lamp turns on) and start the machine in record mode by pressing PLAY and REC. If recording is already in progress, press READY and REC + PLAY.

Time code reproduction

Press REP or SYNC and start recorder in reproduce mode with PLAY.

2.5.21
Varispeed control (option)

The varispeed control is activated either with the built-in VARISPEED button or the VARISPEED remote control key. With an external reference frequency of 9600 Hz, the tape speed corresponds to the selected nominal speed (3.75; 7.5; 15; or 30 ips). The tape speed can be varied by +/- 7 semitones by increasing or decreasing the external generator frequency (+50%/ -33%).

The pilot lamp of the nominal frequency turns on as soon as the capstan motor is in synchronism with the external reference frequency.

The drop-in/drop-out sequence (refer to 2.5.8) is fixed and depends on the nominal speed which means that no matching is executed in varispeed mode!

2.6 EDITING, SPLICING

2.6.1 Procedure for searching a tape address

Easy and quick searching of a specific tape address were basic criteria in the design of the A810 tape recorder:

- Four spooling speeds are available for accurate and fast search of the desired tape address.
- For cueing in spooling mode, the automatic tape lift can be manual defeated by pressing the LIFTER key or by pressing against the cover of the pressure roller.
- Unusable tape segments can be played into the waste basket in PLAY mode (programmable TAPE DUMP key).
- The autolocator function enables accurate search of the desired tape addresses at any tape speed.
- The tape tension sensors are locked in STOP mode and the braking torque is decreased: this makes it easier to shift the tape by hand and to cut it. The locking force of the sensors was selected so (500 p or 5 N) that the tape will not be damaged in the event of a jerky movement.

Caution:

If the tape marker is used and for physical cutting of the tape, the recorder must be switched from sync reproduction to normal reproduction by pressing the REP buttons.

Searching a tape location with spooling:

If the desired tape position is approximately known (e.g. the beginning or the end of a program), it can be approached with the spooling function. The maximum tape speed can be reduced during spooling to 7, 4, or 1 m/s by pressing TRANS <REDUCED> and < or > (also refer to Section 2.5.10!).

Press LIFTER key or push pressure roller cover with your right hand against the capstan so that the tape lift pins are retracted behind the soundheads and the modulation can be cued. Avoid contact with the rubber pinch roller!

As soon as the cue point is reached, the tape can be accurately positioned by repetitively pressing < and >. Press STOP and bring the tape into the exact cutting position by carefully rotating the two reel flanges by hand.

Search with PLAY:

If certain segments with unknown locations are to be cut out of a program, they can be searched with normal PLAY mode. When one of these segments has been located, press the STOP key and position the tape into the correct cutting position by carefully rotating the two reel flanges by hand.

If longer tape segments are to be eliminated, switch the recorder to dump edit mode (internally programmable) by pressing the TAPE DUMP key. The right-hand spooling motor will be switched off and the tape is played into the waste basket on the right-hand side.

The functions spooling, autolocator, remote control, and fader start are disabled while the dump edit mode is active (refer to Section 2.5.13).

Search with autolocator:

(Also refer to 2.5.12)
The tape address 00.00 can be automatically searched with the ZERO-LOC key.

The start of a program is automatically stored in memory and can be automatically searched with the internally programmable LOC START button, provided the recording was not interrupted.

While a program is being recorded, 1 to 4 tape addresses can be stored directly, depending on the internal programming, by pressing TRANS and LOC 1 (...4).

When the corresponding LOC button is pressed, the desired tape address is automatically searched; the exact editing position can now be adjusted by hand.

2.6.2
Cutting the tape

The following features have been provided, for easy cutting and splicing of the tape:

- A tape marker and scissors built into the headblock are available as options.

- Built-in splicing block with a cutting groove below the right-hand guide roller.
  The distance from the right-hand index finger stop of the head shield to the reproduce head is the same as the distance from the right-hand splicing block stop to the cutting groove.

- A tape loosely inserted after splicing will be automatically and correctly drawn in when the PLAY key or one of the spooling keys are pressed.

The tape can be cut once the correct splicing point has been established. This is accomplished by one of the procedures outlined below:

Cutting at the reproduce head

Lift the tape lightly off the reproduce head with antimagnetic scissors and cut it exactly at the gap (center of the head face) at an angle of 45°. A special cut-out is located to the right of the reproduce head so that the scissors can be inserted for lifting the tape.

Marking the tape

Mark the center of the reproduce head face on the tape with the aid of a marker (option) or a soft pencil. Now draw the tape away from the soundhead and cut it at an angle of 45°.

Splicing block with cutting groove

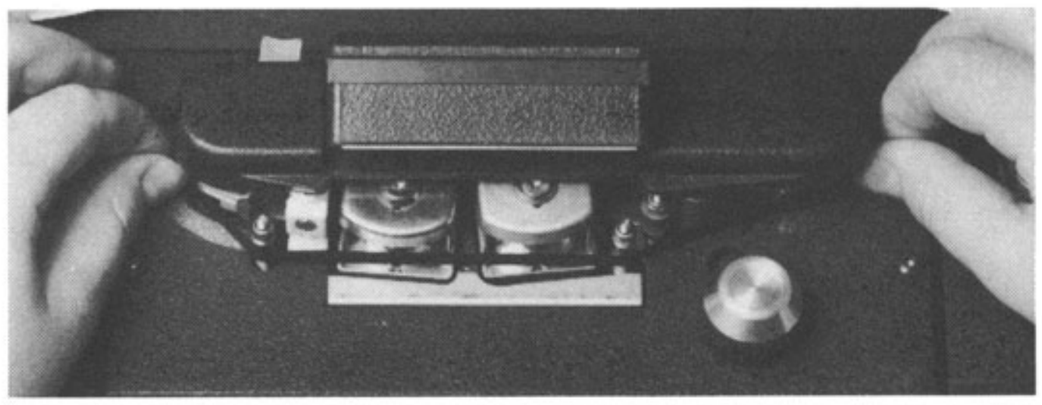

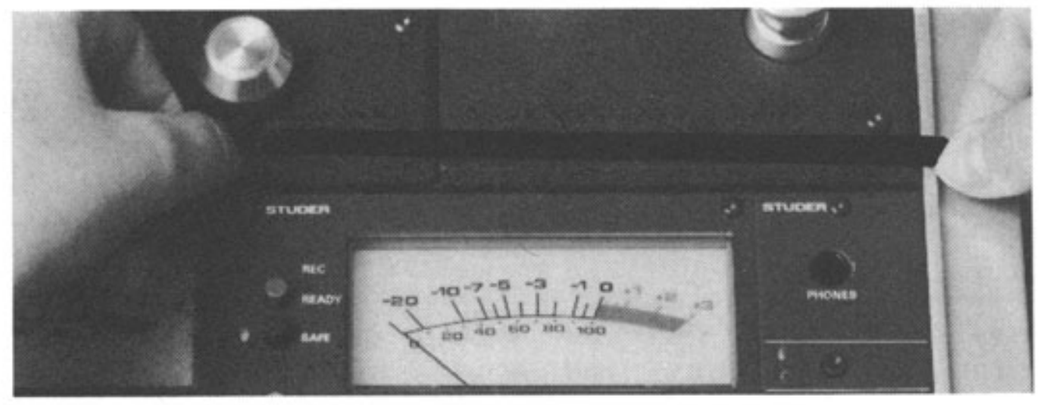

With thumb and index finger of each hand, pick up the tape on the right- and the left-hand side of the head shield and pull it out gently. Without letting the tape slip out of your right hand, insert it into the splicing block in such a manner that the index finger of your right hand barely touches the edge of the block. The cutting position is now exactly over the cutting groove and the tape can be cut with a razor blade.

Built-in tape scissors (option)

Mark the cutting position of the tape with the marker or a soft pencil or memorize the location from the printing on the back. Carefully rotate the right-hand spindle (take-up direction) to advance the cutting position to the scissors. The tape is cut by pushing the scissors button.

2.6.3
Splicing the tape

The splicing block with the cutting groove is located below the right-hand guide roller.

The two tape segments are placed into the splicing block with the printed side facing up. Join the two ends (without overlapping) and secure them with a piece of splicing tape (approx. 3/4" (20 mm) long, 1/4" wide).

Reinsert the tape after it has been spliced. It is not necessary to tension the tape. A loosely but properly inserted tape is automatically drawn in correctly by pressing either the PLAY key or one of the spooling keys.

2.7 DEGRADED OPERATION

This Section describes the extent to which the A810 tape recorder can be operated in the event of a malfunction in one of the assemblies.

"Degraded operation" is not possible if

- One or serveral supply voltages are failing
- If the control for the spooling motors or the capstan motor is defective.

Important:

A defective tape recorder should only be operated in emergencies and be forwarded to an authorized service location as soon as possible.

Should one of the following error messages appear when the recorder is switched on (except EE 01, EE 02, and EE 03 on the LC display or EEE01, EEE02, and EEE03 on the LED display; refer to 2.7.1!), switch the recorder off, wait a few seconds, and switch it on again. If the error message disappears, normal operation can be resumed (the error may have been caused by fluctuations or transients in the line voltage during the initialization of the microprocessor).

Normal operation may also be restored by reinitializing the microprocessor by pressing the black RESET key located below the lower front panel on the circuit board MP UNIT 1.810.752/1.820.780.

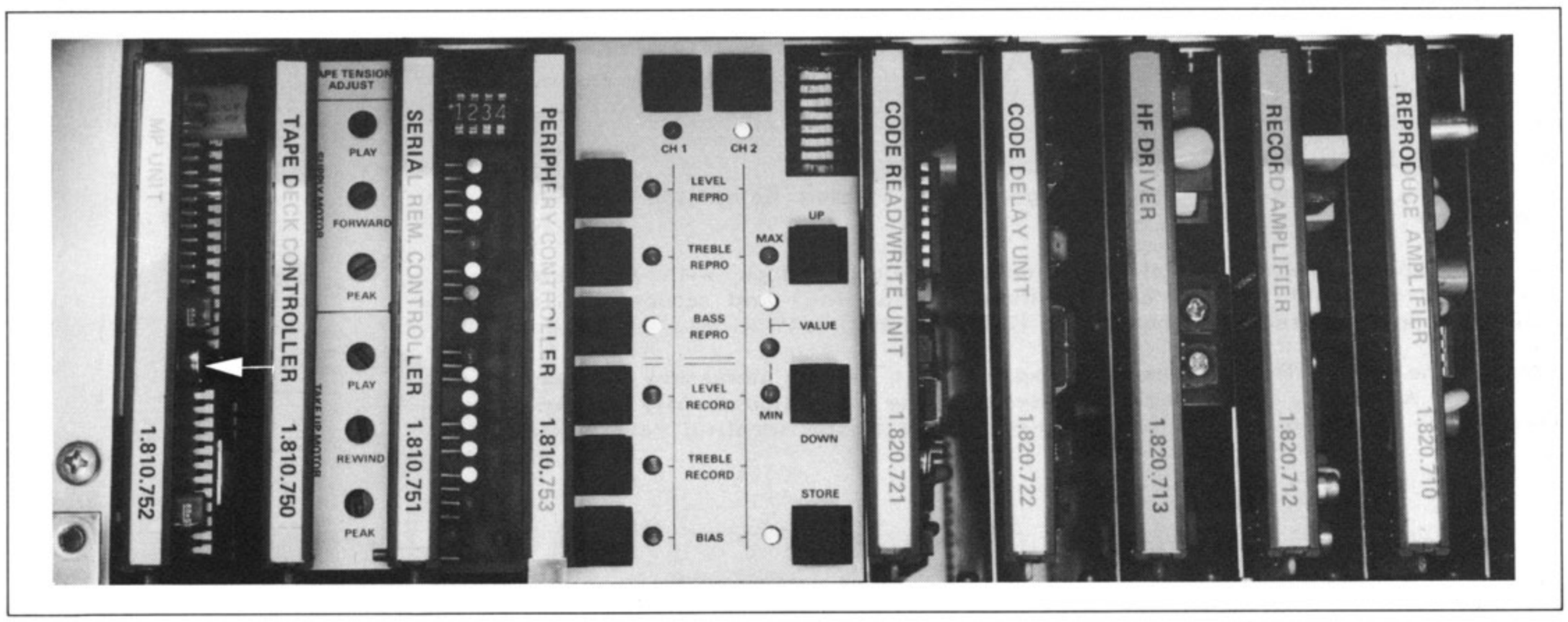

Error messages can be cleared by pressing TRANS <REDUCED> and STOP, however they may reappear after a certain time.

2.7.1 Error messages appearing on the tape timer display

EE 01 (LCD) or EEE01 (LED):

Data error in RAM; is only displayed when the recorder is switched on or after a RESET.
To keep the recorder operational, the standard audio parameters permanently stored in the machine program are loaded into the amplifiers.

Record and reproduce mode are still possible, however minor deviations from the guaranteed technical data may occur because of the changed audio parameters.
A test recording should be made.
Also check the stored locate addresses.

The tape recorder must eventually be recalibrated or the audio parameters stored on tape must be reloaded. (Refer to Section 4.2.)

EE 02 (LCD) or EEE02 (LED):
Occurs only during calibration. Refer to 4.2.1.7.

EE 03 (LCD) or EEE03 (LED):
A data error has been detected during the cyclic testing of the RAM. Same effect and remedy as for EE 01!

Important:

The error messages EE(E)01, EE(E)02 and EE(E)03 are cleared after the recorder is switched OFF and ON or after a RESET. It should be remembered, however, that the standard audio parameters will be loaded!

EE 04 LCD) or EEE04 (LED):

EE 05 (LCD) or EEE05 (LED):
Failure of a supply voltage. Recorder is inoperative. Check the secondary fuse and the supply voltages.

EE 13 (LCD) or EEE13 (LED):
External VU panel not plugged in or jumper on BUS CONNECTOR PCB set to "EXTERN" rather than "INTERN" (refer to Section 4.2.9.8).

EE 14 (LCD) or EEE14 (LED):
Master panel not plugged in (BUS CONNECTOR BOARD).

EE 15 (LCD) or EEE15 (LED):
Data transmission error (in conjunction with serial remote port).

EE C1 (LCD) or EEEC1 (LED):
Failure in audio channel 1. Recording on channel 1 is inhibited by the microprocessor. Reproduction of channel 1 or recording and reproduction on channel 2 are still possible.

EE C2 (LCD) or EEEC2 (LED):
Failure in audio channel 2. Recording on channel 1 is inhibited by the microprocessor. Reproduction of channel 2 as well as recording and reproduction on channel 1 are still possible.

EE Ei (LCD) or EEEEi (LED):
(i = 1, 2, 3, or 4) data error in one of the EPROMs 1, 2, 3, or 4. Further operation of the recorder is not possible if this error occurs during the power-on sequence of the recorder.

If the error occurs after the recorder has been switched on: mount a tape (with trivial content). Check functions such as play, record (also the SAFE function!) and spooling. Check braking action (loop formation!).

The recorder can be put into operation if no apparent problem is found, however the service agency should be notified as soon as possible.

2.8
OPERATION WITH SERIAL INTERFACE

With today's version of the serial interface (1.810.751) the recorder can either be operated from a terminal (RS 232) or this feature can be used to save the audio parameters on tape or cassette.

The serial interface can be changed over between RS 232 connection and audio parameter transfer with the aid of code switches on the address board (SERIAL INTERFACE).

The future version of the serial interface (1.820.751) will also feature a STUDIO bus which is connected according to the SMPTE standard.

2.8.1
STUDIO Bus

The STUDIO bus is a data communications device through which individual pieces of equipment can be integrated into a flexible and powerful system (e.g. remote control of multiple tape recorders).

The serial interface 1.820.751 (in development) is a prerequisite for the STUDIO bus operation.

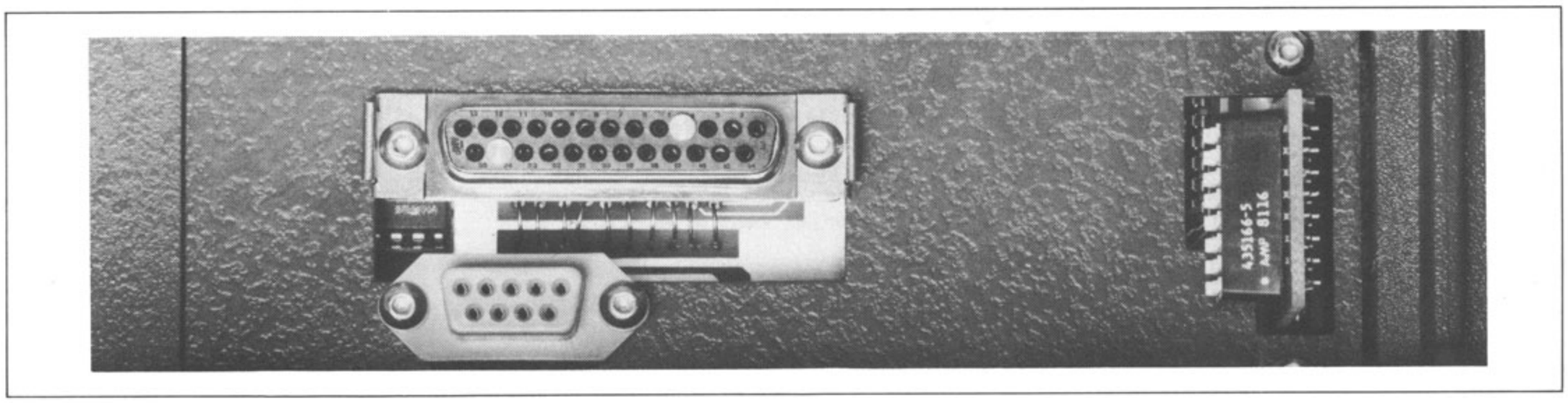

2.8.2.
Data protection

The audio parameters stored in RAM can be copied to a tape or cassette through the 9-pin remote control connector or new audio parameters can be loaded into the recorder (refer to Sections 4.2.7 and 4.2.8).

2.8.3
Serial interface RS 232

The RS 232 interface conforms to the EIA standard (Electronics Industry Association).
The tape recorder is normally set to a data rate of 9.6 kBaud. Data rates of 300 or 1200 Baud can be set with the aid of internal code switches (refer to Section 4.2.9).

A terminal with a corresponding interface can be connected to the RS 232 interface. The remote control functions of the recorder can be significantly enhanced with a terminal.

Procedure

Program serial interface according to 4.2.9.6 and 4.2.9.7.
Connect terminal (refer to Section 2.4.5).
Switch recorder on (the terminal can also be connected when the recorder is already under power).
The following message is displayed on the screen: * A810 *

The desired commands can now be entered from the terminal keyboard. Commands which comprise only 3 letters are typed in and released for execution by pressing the line advance key ("new line"). Commands consisting of characters and letters (e.g. REA 3) are executed as soon as the last digit has been entered. Depending on the type of terminal, commands can also be assigned to individual keys (so-called soft keys). This greatly simplifies the operation.

Instruction set

Order	Meaning	in soft-ware since
LCD	Local keyboard disabled	46 82
LCE	Local keyboard enabled	46 82
STP	Stop	46 82
RWD	Rewind	46 82
FWD	Wind forward	46 82
PLY	Play (reproduce)	46 82
REC	Record	46 82
TPL	Tension loosely threaded tape ("tape load")	46 82
LOC <address>	Locate to <(-)hh(:)( )(/)mm(:)( )(/)ss>	46 82
LMV <counter reading>	Locate on move roll counter reading <xxxxxx>, (3 bytes HEX)	46 82
STM <address>	Set tapetimer to <(-)hh(:)( )(/)mm(:)( )(/)ss>	46 82
SHS	Set higher capstan speed	46 82
SLS	Set lower capstan speed	46 82
SMN	Set Mono/Stereo-switch to MONO	46 82
SST	Set Mono/Stereo-switch to STEREO	46 82
SNB	Set equalization to NAB	46 82
SCR	Set equalization to CCIR	46 82
SVS	Set VARISPEED mode	46 82
CVS	Clear VARISPEED mode	46 82
SRH	Set REHEARSAL mode	46 82
CRH	Clear REHEARSAL mode	46 82
DST	Display the status of the recorder on terminal (clear with CNTL X); possible with MP UNIT 1.820.780 only!	13 83
REA {i}	Channel i READY (i = 1, 2, or 3)	46 82
SAF {i}	Channel i SAFE (i = 1, 2, or 3)	46 82
INP {i}	Channel i INPUT (i = 1, 2, or 3)	46 82
SYN {i}	Channel i SYNC (i = 1, 2, or 3)	46 82
REP {i}	Channel i REPRO (i = 1, 2, or 3)	46 82
MTN {i}	Channel i MUTE (i = 1 or 2)	46 82
MTF {i}	Channel i MUTE off (i = 1 or 2)	46 82
TDN	Time Code Delay on	46 82
TDF	Time Code Delay off (bypassed)	46 82

CONTINUED ON NEXT PAGE

Instruction set (continued)

Order	Meaning	in soft -ware since
SAP <i,j,k>	Set D/A converter <j>, channel <i>, to <k> (i = 1 or 2; j = 0: LEVEL REPRO 1: TREBLE REPRO 2: BASS REPRO 3: EQUALISATION REPRO 4: LEVEL RECORD 5: TREBLE RECORD 6: BIAS 7: EQUALISATION RECORD; k = 2 digits HEX, corresponds to the two least significant digits of the counter display in audio adjust mode)	46 82
SCK <time>	Set clock to <hh(:)( )(/)mm(:)( )(/)ss>	46 82
ST?	Request for status	46 82
TM?	Request for tape counter	46 82
CL?	Request for clock	46 82
PR?	Request if pressure roller engageable (Y=yes, N=no)	46 82
CS?	Request if capstan sync (Y=sync, N=not sync)	46 82
NS?	Request for nominal speed (0 = 3.75 ips; 1 = 7.5 ips; 2 = 15 ips; 3 = 30 ips)	46 82
TH?	Request fir Time Code source (0 = left head; 1 = right head wide; 2 = right head narrow; 3 = Line Input)	46 82
MV?	Request for move roll counter reading (3 Bytes HEX)	46 82
AP? <i,j>	Request for audio parameters channel <i>, D/A converter <j> (i = 1 or 2; j = 0: LEVEL REPRO 1: TREBLE REPRO 2: BASS REPRO 3: EQUALISATION REPRO 4: LEVEL RECORD 5: TREBLE RECORD 6: BIAS 7: EQUALISATION RECORD; Recorder replies with 2 digit HEX number)	46 82
	SPECIAL ORDERS:	
D 108 26E	Display RAM content on terminal (see examples)	46 82
UAP <HEX Addr, Data>	Update audio parameters (see examples)	46 82
P 108 26E	Display RAM content on terminal in MOTOROLA EXORCISER format (see examples)	46 82
L	Reload audio parameters from terminal in MOTOROLA EXORCISER format	46 82

The above list of orders is not complete and will be enlarged as required.

Examples:

FWD = Fast forward

LOC -01:43:00 = Autolocator to Address - 1.43.00

SAF 3 = Time code channnel SAFE (recording inhibited)

AP? 1 4 XX = Request for audio parameters channel 1, D/A converter 4 (LEVEL RECORD); XX = hexadecimal reply of the recorder (e.g. A9)

SAP 1 4 A3 = Set audio parameters channel 1, D/A converter 4 (LEVEL RECORD); new value A3 (old value A9 from the foregoing example will be overwritten!)
CAUTION !!! All other parameters such as SYNC or REPRO, tape speed, tape type, equalisation, must be selected at the recorder itself.

D 108 26E = All audio parameters are displayed on the terminal in hexadecimal format, e.g.:

```
      0  1  2  3  4  5  6  7  8  9  A  B  C  D  E  F
0100 xx xx xx xx xx xx xx xx 82 70 90 95 26 B0 30 BB  ...'........&00;
0110 00 00 00 00 66 39 80 87 30 A0 3E 75 62 50 96 87  .....9..0 >..P..
0120 66 39 80 61 .. .. .. .. .. ..
0130 .. .. .. .. .. ..
.... .. ..
....
```

The address of a parameter can be computed as a decimal value by means of the formula below (and must be subsequently translated to a hexadecimal value!):

RADR = ARAM-12 + IDAC + ISYNC*8 + CCAB*12 + SPEED*24 + CHNL*72 + TAPE*144

whereby:

RADR = Address of the parameter (in decimal form)
ARAM = 264 (108 hex), start address of parameter range in the RAM
IDAC = 0 for LEVEL REPRO
= 1 for TREBLE REPRO
= 2 for BASS REPRO
= 3 for EQUALISATION REPRO
= 4 for LEVEL RECORD
= 5 for TREBLE RECORD
= 6 for BIAS RECORD
= 7 for EQUALISATION RECORD
ISYNC = 0 for REPRO MODE
= 1 for SYNC MODE
CCAB = 0 for CCIR equalization (automatically = 0 @ 30 ips)
= 1 for NAB equalizaton (automatically = 1 @ 3.75 ips)
SPEED = 0 for 3.75 ips (9.5 cm/s)
= 1 for 7.5 ips (19 cm/s)
= 2 for 15 ips (38 cm/s)
= 3 for 30 ips (76 cm/s)
CHNL = 0 for channel 1
= 1 for channel 2
TAPE = 1 for tape sort A
= 0 for tape sort B

The address of TREBLE REPRO, SYNC, NAB, 38 cm/s, channel 1, tape sort A, is thus computed as follows:

264-12 + 1 + 1*8 + 1*12 + 2*24 + 0*72 + 1*144 = 465 = **01D1 (hex)**

UAP 01D1 5C = Update above audio parameter to 5C

P 108 26E = All audio parameters are displayed on the terminal in hexadecimal form in the MOTOROLA EXORCISER format. This format results in more reliable data transmission because possible errors can be recognized from the CHECKSUM.

```
                Same example as above:

S11B0108827090952 6B030BB000000006639808730A03E75625096870B
S11B0120663980613 0A03E996250966166306A44305446BA62508844AD
S11B01386630.........                                     |\|
..........                                                | :
\|\|\__|\_________________________________________________| :
 : :   :                                                  : :__CHECKSUM
 : :   :                                                  :
 : :   :                                                  :__Data
 : :   :__Address (hex)
 : :
 : :__BYTE COUNT, number of bytes incl. address and CHECKSUM (hex)
 :
 :__for: HEADER RECORD=S0, DATA RECORD=S1, END RECORD=S9
```

2.9 DAILY CARE

Daily care is limited to cleaning the soundheads and the tape guidance elements.

Dust and oxide particles from the magnetic tape coating tend to accumulate on the soundheads and the tape guidance elements. This can lead to so-called dropouts in recording mode.

Cleaning should be performed daily or more frequently if contamination is visible.

Cleaning is best performed with a STUDER cleaning kit (order No. 10.496.010.00). It contains all necessary utensils and a special cleaning fluid.

Procedure

Moisten a felt swab with cleaning fluid and clean all tape guidance elements. Dry the cleaned parts with a dry felt swab.

Caution!

Ensure that no cleaning fluid drips into the bearing when cleaning the capstan!
The cleaning fluid can damage the window of the VU-meter!

Cleaning the anti-scrape flutter roller

It is recommended to thread an old tape and to insert it behind the left-hand tape lift pin. Press the PLAY key and clean the rotating anti-scrape flutter roller with a felt swab.

SECTION 3 POWER SUPPLY, TAPE TRANSPORT CONTROL

3.1	FUNCTIONAL DESCRIPTION	3/1
	Arrangement of groups	3/1
3.1.1	Power supply	3/1
	Block diagram A810	3/2
3.1.2	MP Unit GR 20 EL 01	3/3
3.1.3	Tape deck controller GR 20 EL 02	3/4
3.1.4	Bus converter GR 20 EL 05	3/4
3.1.5	Periphery controller GR 20 EL 04	3/5
3.1.6	Command unit GR 21	3/6
3.1.7	Serial remote controller GR 20 EL 03	3/6
3.1.8	Capstan motor control GR 26	3/7
3.1.9	Spooling motor control GR 24	3/7
3.1.10	Tape tension sensors GR 27, GR 28	3/9
3.1.11	Tape move sensor GR 28 EL 05	3/10
3.2	REMOVING THE TAPE TRANSPORT ASSEMBLIES	3/11
3.2.1	Covers	3/11
3.2.2	Headblock	3/15
3.2.3	Tape tension sensors	3/16
3.2.4	Pressure roller assembly	3/17
3.2.5	Tape lift assembly	3/18
3.2.6	Tape brakes	3/19
3.2.7	Spooling motors	3/20
3.2.8	Spooling motor control	3/20
3.2.9	Capstan motor	3/21
3.2.10	Power supply unit	3/21
3.2.11	Monitor unit	3/22
3.3	MECHANICAL ADJUSTMENTS	3/23
3.3.1	Tape brakes	3/23
3.3.2	Pressure unit	3/26
3.3.3	Tape lift	3/28
3.3.4	Tape tension sensors	3/29
3.3.5	Headblock	3/35
3.4	ELECTRICAL ADJUSTMENTS	3/38
3.4.1	Supply voltages	3/38
3.4.2	Tape tension sensors	3/38
3.4.3	Tape move sensor	3/40
3.4.4	End-of-tape sensor	3/40
3.4.5	Tape tension adjustment	3/40
3.4.6	Capstan motor control	3/41
3.4.7	Spooling motor control	3/44
3.5	CIRCUIT DESCRIPTIONS	3/46
3.5.1	Power supply unit	3/46
3.5.2	Stabilizer GR 07	3/46
3.5.3	MP unit GR 20 EL 01	3/47
3.5.4	Tape deck controller GR 20 EL 02	3/49
3.5.5	Bus converter GR 20 EL 05	3/52
3.5.6	Periphery controller GR 20 EL 04	3/54
3.5.7	Command unit GR 21	3/56
3.5.8	Serial remote controller GR 20 EL 03	3/58
3.5.9	Capstan motor control GR 26	3/59
3.5.10	Spooling motor control	3/61
3.5.11	Tape tension sensors GR 27, GR 28	3/63
3.5.12	Tape move sensor GR 28 EL 05	3/63
3.5.13	End-of-tape sensors GR 27 EL 04, GR 28 EL 06	3/63

3. POWER SUPPLY, TAPE TRANSPORT CONTROL

3.1 FUNCTIONAL DESCRIPTION

3.1.1 Power supply

Line voltages:

100, 120, 140, 200, 220, 240 V ±10%, 50...60 Hz

Internal supply voltages

+5.6; +15; -15; +24 V; all stabilized
125 VAC for spooling motor control
130 VAC for capstan motor control

Power supply unit

The line voltage is taken from the 3-pin AC inlet (GR 01) through the 2-pole power switch (GR 02), the line filter (GR 03), and the line voltage selector with the primary fuse (GR 04) to the power transformer (GR 05).

The secondary side of the power transformer supplies the following voltages: 25.6 V; 35.2 V; 130 V, 125 V; 10 V (spare).

The 25.6 V and the 35.2 V are rectified and smoothed (GR 06). All stabilized voltages are generated on the stabilizer board (GR 07) from these two rectified voltages:
25.6 VAC: +5.6 V, +24 V;
35.2 VAC: +15 V; -15 V.

The +5.6 V for the microprocessor are generated by a switching regulator with pulse width modulation. The output current is limited to approximately 7 A.

Voltage regulators with fixed settings generate the +24 V and the ±15 V. The circuit for the ±15 V has been designed so that the currents flowing through the two regulators are identical.

A stabilized voltage that rises inadmissibly because of a defect, will be automatically short-circuited. If the current limiter of the corresponding voltage regulator is defective, the corresponding secondary fuse blows. The connected assemblies are, therefore, protected from consequential damage.

Should one of the stabilized voltages fail, the microprocessor attempts to switch the recorder from any operating mode to STOP and SAFE, if this is still possible.

The line voltage is monitored. The logic state of the recorder is unaffected by transient line voltage failures of less than 80 ms. For longer failures, the recorder automatically enters STOP and SAFE mode before being switched off.

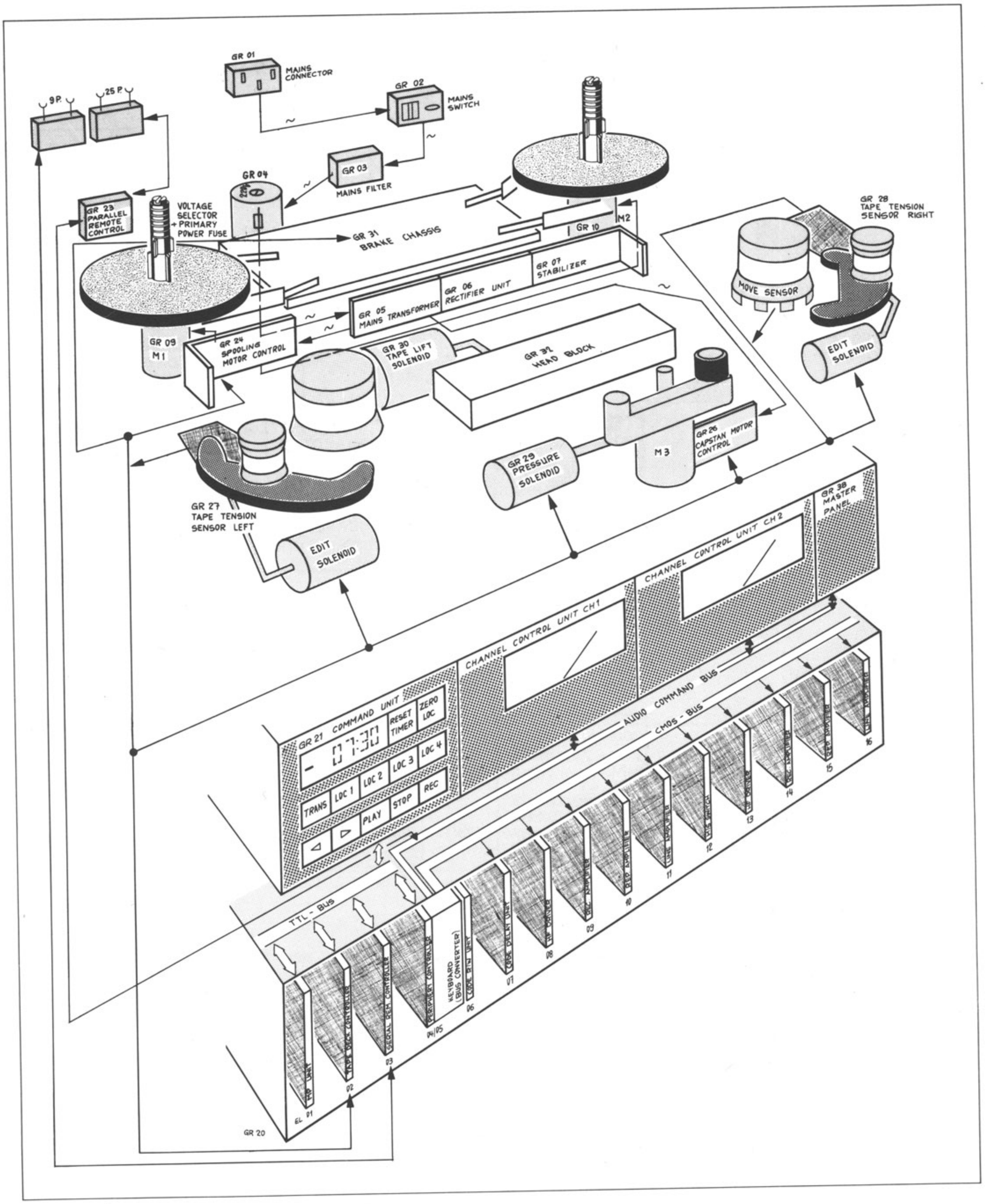
GR 01
MAINS CONNECTOR
GR 02
MAINS SWITCH
GR 03
MAINS FILTER
GR 04
9P.
25 P.
GR 23 PARALLEL REMOTE CONTROL
VOLTAGE SELECTOR + PRIMARY POWER FUSE
GR 31 BRAKE CHASSIS
GR 10
M2
GR 28 TAPE TENSION SENSOR RIGHT
MOVE SENSOR
EDIT SOLENOID
GR 07 STABILIZER
GR 06 RECTIFIER UNIT
GR 05 MAINS TRANSFORMER
GR 09 M1
GR 24 SPOOLING MOTOR CONTROL
GR 30 TAPE LIFT SOLENOID
GR 32 HEAD BLOCK
GR 26 CAPSTAN MOTOR CONTROL
M3
GR 29 PRESSURE SOLENOID
GR 27 TAPE TENSION SENSOR LEFT
EDIT SOLENOID
CHANNEL CONTROL UNIT CH 2
GR 38 MASTER PANEL
CHANNEL CONTROL UNIT CH 1
GR 21 COMMAND UNIT
RESET TIMER
ZERO LOC
LOC 4
LOC 3
LOC 2
LOC 1
TRANS
PLAY
STOP
REC
AUDIO COMMAND BUS
CMOS - BUS
TTL - BUS
KEYBOARD (BUS CONVERTER)
PERIPHERY CONTROLLER
SERIAL DECM CONTROLLER
TAPE DECK CONTROLLER
CODE DELAY UNIT
CODE BIN UNIT
PLO AMPLIFIER
DEC AMPLIFIER
PLO AMPLIFIER
EL 01
02
03
04/05
06
07
08
09
10
11
12
13
14
15
16
GR 20

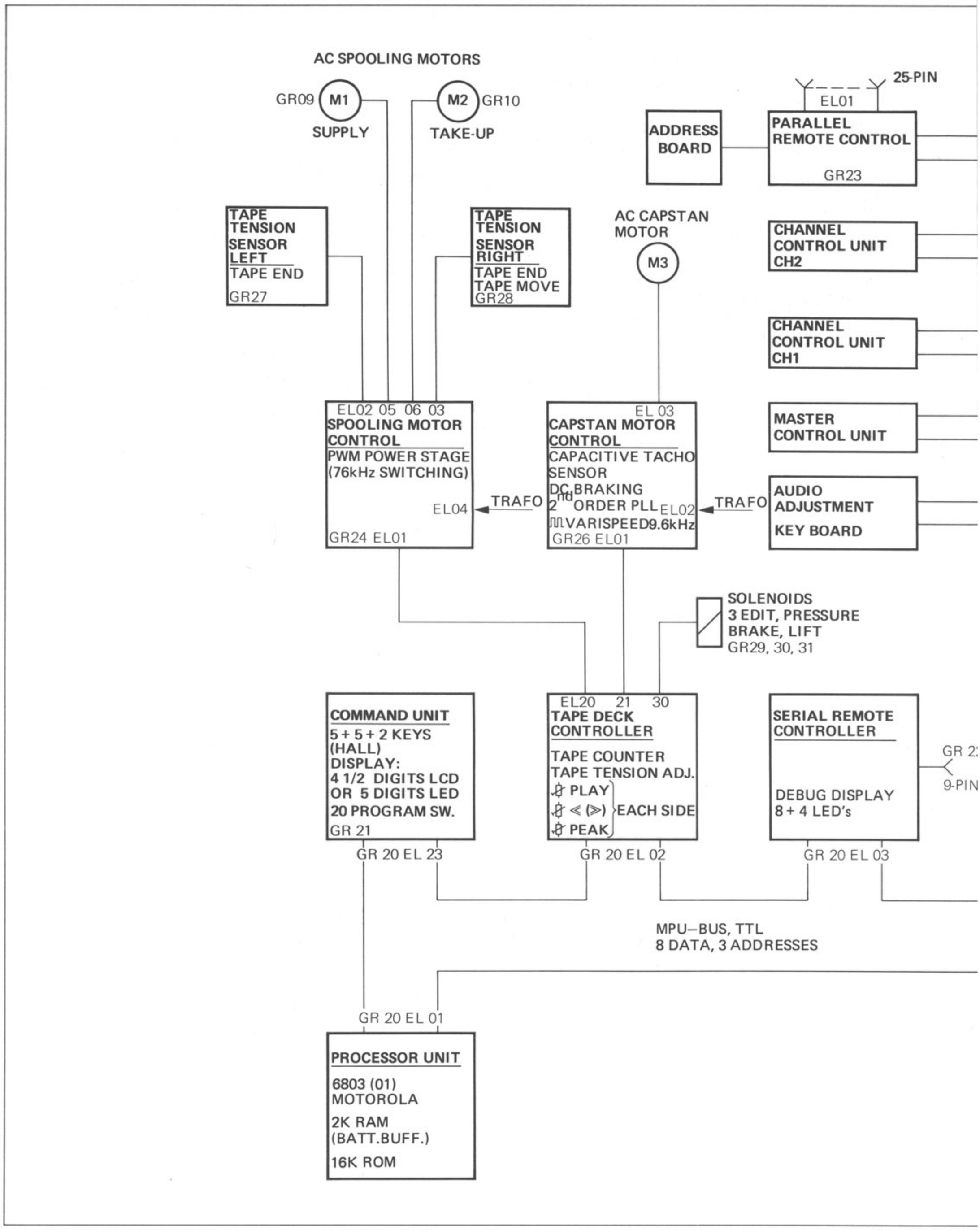
AC SPOOLING MOTORS
GR09 M1
SUPPLY
M2 GR10
TAKE-UP
25-PIN
EL01
ADDRESS BOARD
PARALLEL REMOTE CONTROL
GR23
TAPE TENSION SENSOR LEFT
TAPE END
GR27
TAPE TENSION SENSOR RIGHT
TAPE END
TAPE MOVE
GR28
AC CAPSTAN MOTOR
M3
CHANNEL CONTROL UNIT CH2
CHANNEL CONTROL UNIT CH1
EL02 05 06 03
SPOOLING MOTOR CONTROL
PWM POWER STAGE
(76kHz SWITCHING)
EL04
GR24 EL01
TRAFO
EL 03
CAPSTAN MOTOR CONTROL
CAPACITIVE TACHO SENSOR
DC BRAKING
2nd ORDER PLL
VARISPEED9.6kHz
EL02
GR26 EL01
TRAFO
MASTER CONTROL UNIT
AUDIO ADJUSTMENT
KEY BOARD
SOLENOIDS
3 EDIT, PRESSURE
BRAKE, LIFT
GR29, 30, 31
COMMAND UNIT
5 + 5 + 2 KEYS
(HALL)
DISPLAY:
4 1/2 DIGITS LCD
OR 5 DIGITS LED
20 PROGRAM SW.
GR 21
EL20 21 30
TAPE DECK CONTROLLER
TAPE COUNTER
TAPE TENSION ADJ.
PLAY
≪ (≫)
PEAK
EACH SIDE
SERIAL REMOTE CONTROLLER
DEBUG DISPLAY
8 + 4 LED's
GR 2
9-PIN
GR 20 EL 23
GR 20 EL 02
GR 20 EL 03
MPU–BUS, TTL
8 DATA, 3 ADDRESSES
GR 20 EL 01
PROCESSOR UNIT
6803 (01)
MOTOROLA
2K RAM
(BATT.BUFF.)
16K ROM

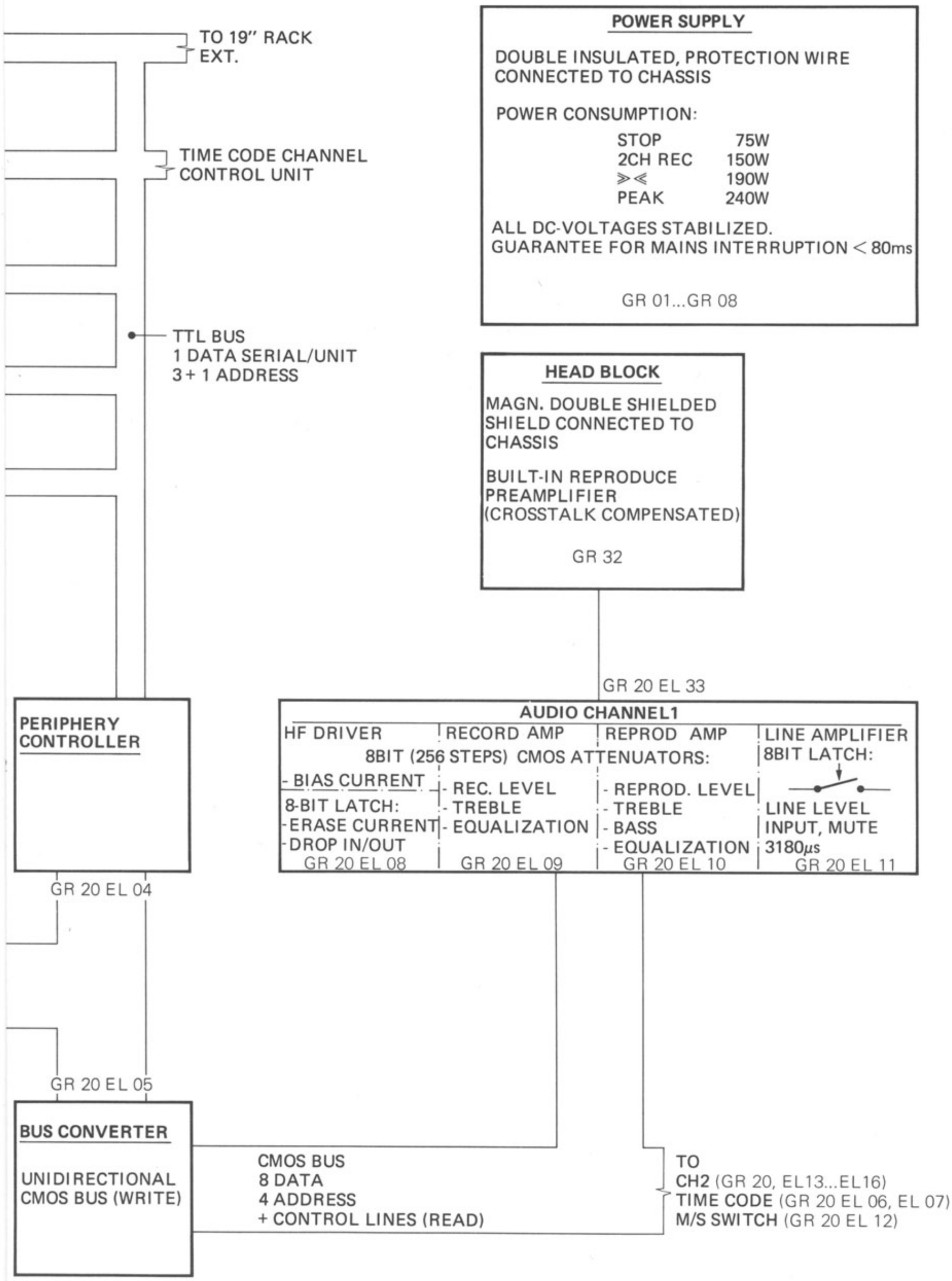
TO 19" RACK EXT.
TIME CODE CHANNEL CONTROL UNIT
TTL BUS
1 DATA SERIAL/UNIT
3 + 1 ADDRESS
POWER SUPPLY
DOUBLE INSULATED, PROTECTION WIRE CONNECTED TO CHASSIS
POWER CONSUMPTION:
STOP 75W
2CH REC 150W
≫≪ 190W
PEAK 240W
ALL DC-VOLTAGES STABILIZED.
GUARANTEE FOR MAINS INTERRUPTION < 80ms
GR 01...GR 08
HEAD BLOCK
MAGN. DOUBLE SHIELDED SHIELD CONNECTED TO CHASSIS
BUILT-IN REPRODUCE PREAMPLIFIER (CROSSTALK COMPENSATED)
GR 32
GR 20 EL 33
PERIPHERY CONTROLLER
AUDIO CHANNEL1
HF DRIVER
RECORD AMP
REPROD AMP
LINE AMPLIFIER
8BIT (256 STEPS) CMOS ATTENUATORS:
8BIT LATCH:
- BIAS CURRENT
8-BIT LATCH:
- ERASE CURRENT
- DROP IN/OUT
GR 20 EL 08
- REC. LEVEL
- TREBLE
- EQUALIZATION
GR 20 EL 09
- REPROD. LEVEL
- TREBLE
- BASS
- EQUALIZATION
GR 20 EL 10
LINE LEVEL INPUT, MUTE 3180μs
GR 20 EL 11
GR 20 EL 04
GR 20 EL 05
BUS CONVERTER
UNIDIRECTIONAL CMOS BUS (WRITE)
CMOS BUS
8 DATA
4 ADDRESS
+ CONTROL LINES (READ)
TO
CH2 (GR 20, EL13...EL16)
TIME CODE (GR 20 EL 06, EL 07)
M/S SWITCH (GR 20 EL 12)

3.1.2
MP Unit GR 20 EL 01

1.810.752/1.820.780

The MPU logic converts the input commands into logic signals for the control; it stores the audio parameters, the locate addresses, and, whenever the recorder is switched off, also the momentary operating status. The clock frequency of the microprocessor is also the central control for the recorder timings:
Capstan motor control, switched spooling motor output stage, audio, time code.

Bus and select lines connect the:
- Tape deck controller
- Audio controller
- Command unit
- Serial remote controller

The TTL MPU bus features 8 data lines and 3 address lines as well as separate select lines to the individual controllers.

Microprocessor

The MC 6803 is a bidirectional, bus-oriented 8-bit parallel microprocessor with 16 address bits. It is implemented in NMOS technology, is TTL compatible, and requires only one supply voltage (+5 V). Seven different addressing methods are possible and its internal instruction set comprises 72 commands.

The internal 128 byte RAM is not required for this application and is ignored by the program. External memory up to 64 K can be addressed with the 16 address bits.

In the implemented operating mode (EXPANDED MULTIPLEXED MODE No. 2), PORT 3 functions as a time-division multiplex address/data bus.

The internal clock frequency is 1.2288 MHz which is derived by dividing the external quartz frequency of 4.9152 MHz by four.

The clock frequency is further divided down to the following frequencies:
:4 = 307.2 kHz (reference frequency for the RF driver, erase and bias frequency)
:16 = 76.8 kHz (clock frequency for spooling motor output stage)
:120 = 9.6 kHz (reference frequency for capstan motor control)

External memories

The external memories comprise 4 x 4K PROM and 2K RAM (1.810.752) or 3 x 8K PROM and 2K RAM (1.820.780) respectively plus a rechargeable buffer battery. The battery is charged by the +5.6 supply voltage and feeds the RAM when the recorder is switched off.

The complete machine program is stored in PROM. The audio data, the tape timer information, the selected functions, the locate addresses, and the tape transport status are stored in RAM.

RESET

The RESET input fulfils two functions:

- Correct initialization of the microprocessor during the power-on sequence; the RESET input must be kept below 0.8 V until the supply voltage V/CC has reached at least 4.75 V so that the internal clock generator can stabilize itself during this time.

- If the microprocessor functions incorrectly, it is reinitialized either automatically or with switch S1, and the program is restarted.

INTERRUPT

An interrupt routine is initiated if a line voltage failure is detected by the power supply (T-PWRON = 0). The current instruction is completed before the program branches to the interrupt routine. The operating condition at the time of the interrupt is stored in the RAM and a STOP command is automatically transmitted to the tape transport control after 80 ms. If the line voltage returns before the 80 ms have elapsed, the INTERRUPT routine is cancelled and normal program execution continues.

The new version of the MPU board 1.820.780 (in development) provides the following additional features:

- Change-over between LED or LCD tape timer display (selectable with jumper on the TAPE DECK CONTROLLER)
- Automatic MUTING during spooling
- Display of recorder status on a connected computer terminal (with DST command)

3.1.3
TAPE DECK CONTROLLER GR 20 EL 02

1.810.750

The TAPE DECK CONTROLLER is responsible for transmitting the commands from the microprocessor to the tape transport and for reporting the tape transport status to the CPU. It fulfils the following functions:

- Setpoint input for spooling motor control with 2 × 3 trimmer potentiometers. Control of tape transport solenoids (brake, 3 × EDIT, pressure and tape lift).
- Reading in the tape transport status.
- Data for capstan motor control.
- Interpretation of tape move sensor.
- Supply voltage monitoring
- Monitoring the limit switches of the tape tension sensors (torn tape!)

3.1.4
BUS CONVERTER GR 20 EL 05

1.810.754

TTL/CMOS bus converter (CMOS bus with 8 data bits and 4 address bits). Interface to audio section; transmits only data from microprocessor to audio section (WRITE only).

The audio parameters transmitted by the MPU are written into the audio amplifier through the TTL data bus, the bus converter, and the CMOS bus:

- Input and output level 0, 4, 8 or 10 dBm
- Change-over INP, SYNC, REP
- MUTE
- Equalization 3180 µs
- Erase current
- Drop-in or drop-out

The following alignments are performed by digital/analog converters (256-step attenuators):

- Reproduce level
- Reproduce frequency response (treble, bass)
- Reproduce equalization
- Record level
- Record frequency response (treble)
- Record equalization
- Bias current

The bus converter essentially consists of an interface circuit PIA (PERIPHERAL INTERFACE ADAPTER) and subsequent TTL/CMOS converters.

3.1.5
PERIPHERY CONTROLLER GR 20 EL 04

1.810.753

The PERIPHERY CONTROLLER is the interface to the serial TTL bus (1 serial data bit per peripheral unit; 3 address bits; 1 READ SELECT line and 1 WRITE SELECT line).

Data, address and READ/WRITE select lines connect the following units:

- Audio controller keyboard; device for inputting audio parameters.
- Channel control unit CH1; keys and status indicator lamps chanel 1.
- Channel control unit CH2; keys and status indicator lamps channel 2.
- Channel control unit CH3; push buttons and status indicator lamps for time code channel.
- Master panel; push buttons and status indicator lamps for tape speed, mono-stereo switch (or tape bias selector), and CCIR/NAB equalization.
- Remote interface; interface to parallel remote control.

The PERIPHERY CONTROLLER essentially consists of the interface circuit PIA (PERIPHERAL INTERFACE ADAPTER).

Input device for audio parameters (1.810.755):
Comprises 11 keys, 13 status indicator lamps (LED), and 8 code switches. The audio parameters programmed with the keys are acknowledged with status indicator lamps. The code switches are used for:

- Selecting the erase current for full-track, 2-track, and 2-track with time code.
- Operating the track mode and output selectors individually for each channel or in parallel for both channels.
- Setting the line level for inputs and outputs.
- Same audio parameters for CCIR and NAB equalization.
- Enabling automatic muting (AUTO MUTE) of the outputs during spooling.
- Enabling the input device.

Audio command bus:
The information of the track mode selectors (SAFE/READY), the SAFE/READY switch of the time code channel, the output selector (INP, SYNC, REC) as well as the switches of the master panel are transmitted to the MPU through the audio command bus, the PIA, and the MPU TTL bus.

Remote interface GR 23 (1.810.738):
The interface of the parallel remote control is connected through the audio command bus to the PIA of the PERIPHERY CONTROLLER.

The following functions can be controlled remotely by this unit:
Reproduce, record, spooling, stop, fader start, TRANS <REDUCED> (all with status indication); as well as LOC 1, LIFTER (tape lift defeat), and varispeed mode.

Address board (option):
Six code switches are available for entering an address so that several units can be operated on a serial bus. Two additional code switches have been provided for setting the baud rate of the serial interface: (300, 1200, and 9600 (factory setting).

3.1.6
COMMAND UNIT GR 21

1.810.300/1.810.303

Comprises 12 (Hall) keys and the tape timer display (1.810.300: LCD, 4 1/2 positions; 1.810.303: LED, 5 positions) with leading negative sign. Status indicator lamps for the keys (without RESET TIMER and ZERO LOC).

Twenty code switches are located on the bottom of the COMMAND UNIT:

- Standard selector for time code (film, Europe, USA black/white, USA colored NTSC)
- Code track type STUDER or PILOT (1.2" offset)
- LIFTER button, momentary or flip-flop button
- Drop-in sequence
- Drop-out sequence
- Tape type "A" or "B" at low speed
- Tape type "A" or "B" at high speed
- Mono/stereo switch or tape bias selector
- Selection of tape speeds (2 with push buttons on LS version, 4 with rotary switch on HS version).
- Direct drop-in with REC (from PLAY)
- Reprogramming of LOC 2, LOC 3, LOC 4 keys

Also refer to Section 4.2.9

The COMMAND UNIT is connected to the microprocessor unit through the MPU bus.

Tape timer display

1.810.736/1.810.768

The display (1.810.736: LCD, 4 1/2 positions; 1.810.768: LED, 5 positions) with leading negative sign is controlled by the MPU through the MPU bus. It displays either the momentary tape address or an error message (in the event of a malfunction in the recorder). The audio parameters entered from the keyboard are displayed in hexadecimal format.

In time code versions equipped with the new time code amplifier 1.820.719 (in development), the far right decimal point of the LED-type timer display is illuminated when a code signal is available at the input or is being read from tape (depending on the setting of the INP/SYNC/REP selector).

3.1.7
SERIAL REMOTE CONTROLLER GR 20 EL 03

1.810.751 / 1.820.751

Interface for serial remote control:

- Connection to STUDIO bus
- Connection to a terminal
- Saving the audio parameters on tape
- Expanded test system

STUDIO bus

The module 1.810.751 is not designed for STUDIO bus operation according to the SMPTE standard. This will, however, be supported by the module 1.820.751 which is in development.

Saving the audio parameters on tape

The audio parameters stored in RAM can be copied to tape through the 9-pin serial remote control connector. Pins 4 and 6 of the 9 pin connector must be linked with the RECORD input of the tape recorder (or an external cassette recorder). Also refer to Section 4.2.7.

The stored audio parameters can be compared with the RAM content or be reloaded into the RAM by connecting the 9-pin serial remote connector to the REPRODUCE output of the tape recorder (or the cassette recorder). Also refer to Sections 4.2.7 and 4.2.8.

RS 232 terminals

Connector pins 2, 3, 7, 8, and 9 are required for connecting an external terminal equipped with an RS 232 interface. SNDATA is the send line, RCVDATA the receive line.

The two status indicator lamps SEND and RECEIVE indicate whether the microprocessor is sending data to or receiving data from the serial interface.

DEBUG display

1.810.757

The DEBUG display equipped with LEDs indicates the status of the data bus, the address bus, and the 3 select lines.

The setting of a code switch determines whether the WRITE or the READ signals of the MPU bus are displayed.

3.1.8
Capstan motor control GR 26

1.810.761.00/81, 1.810.766.00

A 2nd order PLL (PHASE LOCKED LOOP) circuit permits phase-locked synchronization of the capstan speed with the internal or external reference frequency.

A capacitative sensor detects the movement of a toothed ring that is rigidly coupled to the capstan shaft. The change in the capacitance of the sensor causes a frequency modulation at the input of the capstan motor control. The signal is demodulated in an FM demodulator; the resulting voltage is converted to a square-wave signal that is proportional to the frequency of the capstan speed, and constitutes the actual value of the closed loop.

The 9.6 kHz reference frequency which is divided down by a ratio that depends on the selected nominal frequency, constitutes the reference value of the closed loop. The control signal is developed in a phase comparator from the actual value and the reference value, and the capstan lock indication and acknowledgment is generated.

The capstan motor is a maintenance-free AC motor that is supplied by the fuse-protected 130 VAC of the power transformer. The motor current flows into a bridge rectifier and as a pulsating DC current through the control transistor and back into the transformer winding.

DC braking is initiated when the recorder is switched from high to low speed or if rapid speed reduction occurs in varispeed mode.

3.1.9
Spooling motor control GR 24

1.810.760

The switched spooling motor control with pulse-width modulation is arranged on a single circuit board. This module ensures low-loss control of the spooling motors and accurate tape tension in any operating mode as well as four different spooling speeds.

The pulse-width modulator processes the analog signals AN-RFTTL/R (REFERENCE TAPE TENSION LEFT/RIGHT = reference value) from the TAPE DECK CONTROLLER and AN-TTL/R (TAPE TENSION LEFT/RIGHT = actual value) from the tape tension sensors. Comparison of the reference value to the actual value yields analog control signals (AL/AR) which are proportional to the required motor power.

Limiting the spooling speed:
The signal T-CLK-1 of the tape move sensor (square-wave signal with frequency proporational to the tape speed) is converted by a pulse shaper operating with double-edge interpolation into a pulse train of doubled frequency. A pulse of constant width is formed from each edge of T-CLK-1. A DC voltage (B) proportional to the tape speed is generated in a low-pass filter (actual value).

The two reference speed bits of T-TPSPD-1/2 are converted in a D/A converter into a DC voltage. This voltage which can be adjusted with a trimmer potentiometer determines the maximum spooling speed (reference value). The signals DL/DR are formed by comparing the reference value to the actual value. These lower the control voltage AL or AR when the preset spooling speed is reached and thus decrease the driving of the output stage. The signals AN-RFTTL/R determine through differential stages which of the motors (take-up motor) requires reduced driving.

The clock frequency TD-CLK (from the MPU) is 76.8 kHz; noise voltages are eliminated through a Schmitt trigger after which the frequency is taken to a generator which converts the square-wave voltage into a delta voltage. This voltage (E) which is fully balanced relative to neutral is taken to the two modulators and converted by these to pulses of variable width. The pulse width is proportional to the magnitude of the control voltage AL, AR; the maximum width (cyclic duration factor = ED) is 95% and is a function of the amplitude of the (adjustable) delta voltage. If the c.d.f (ED) is less than 2%, the pulses become so small that the spooling motors are no longer driven.

The control pulses are taken to the FETs of the output stage through Schmitt triggers, driver stages, and isolating transformers.

The output stage is supplied directly by the 125 VAC of the power transformer. The 50...60 Hz AC voltage is taken through a fuse to the bridge rectifiers and switched on and off by the NMOS power FETs with a frequency of 76.8 kHz.

The motor windings and the storage chokes L act as a load. This circuit arrangement has the effect that a pulsating DC current continues to flow through the power FET. This current is switched by the control pulses. The wider the control pulses, the higher the switched power and thus the motor output.

At the instant the current is switched off, the magnetic field in the storage choke collapses. As a result, a voltage with inverse polarity is induced in the choke. This voltage is eliminated by the current flowing through the free-wheeling diodes, the commutation circuit, and the motor. The commutation circuit ensures that no dangerous voltage spikes occur.

3.1.10
Tape tension sensors GR 27, GR 28

1.810.728/730

The tape tension sensors comprise

- Sensor arm with inductive position sensor
- Non-contacting end-of-tape sensor

The tape tension sensor consists of an oscillator circuit, a decoupling circuit, and a screening plate that is mechanically connected to the sensor arm. The movement of the sensor arm causes a change in the coupling of the two circuits, and an electrical image of the sensor arm deflection becomes available at the output (signal AN-TTL/R).

The sensor arm is coupled to the piston of a dashpot between which an infrared light barrier is located. The sensor arm interrupts the light beam when it leaves its neutral position. The light barrier responds either when the end of the tape is reached or if the tape tears (signal T-TENDL/R)

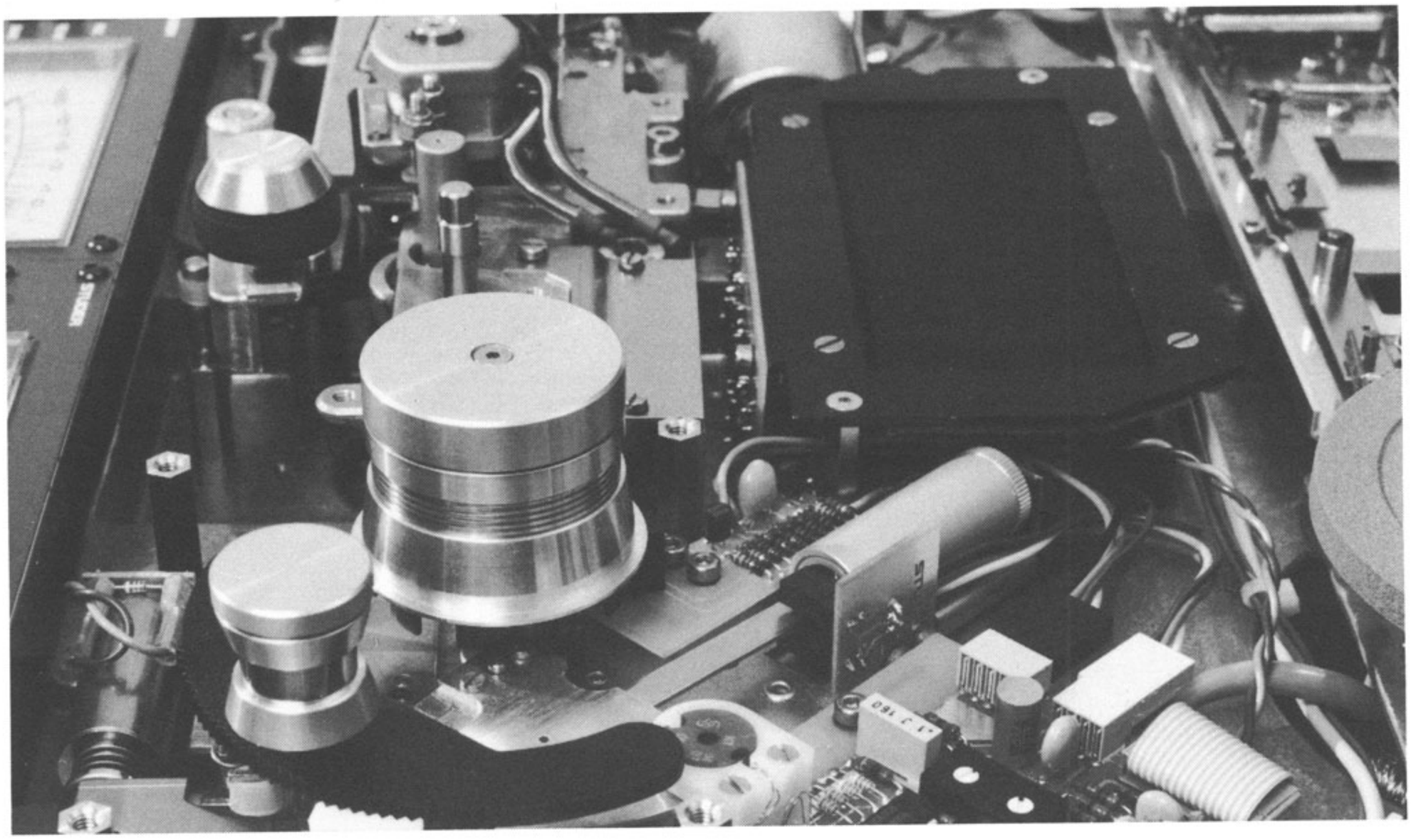

3.1.11
Tape move sensor GR 28 EL 05

1.810.731

The tape move sensor consists of two infrared light barriers and a toothed ring that is coupled to the right-hand guide roller. Two square-wave signals offset by 90° are output (10 pulses per revolution or 16 Hz at 7.5 ips). The following information is extracted (TAPE DECK CONTROLLER) from these square-wave signals:

- Tape timer display
- Tape speed (for spooling motor control)
- Direction of tape travel

3.2
REMOVING THE TAPE TRANSPORT ASSEMBLIES

3.2.1
Covers

WARNING

DISCONNECT POWER CORD BEFORE REMOVING ANY HOUSING COVERS!

The designation of the covers refer to the recorder in upright position.

Headblock cover

- Unscrew cover of pressure roller (without tools) and remove roller.
- Unfasten 4 screws M4 (hexagon-socket-screw key 2.5 mm)

Head cover

Only the head cover needs to be removed when aligning the azimuth of the soundheads.

- Unfasten 2 screws M4 (hexagon-socket-screw key 2.5 mm) on the left and the right of the head shield.

- When reassembling ensure that the conductors leading to the heads are not pinched (especially in time code versions).

Cover of the tape tension sensor

- Remove headblock cover.
- Unscrew cover of guide roller (without tools) and remove roller.
- Unfasten two screws M4 (hexagon-socket-screw key 2.5 mm).
- Remove cover.

Tape transport cover

- Unfasten 3 screws M4 (hexagon-socket-screw key 2.5 mm).
- Lift off tape transport cover.

Rear cover, upper

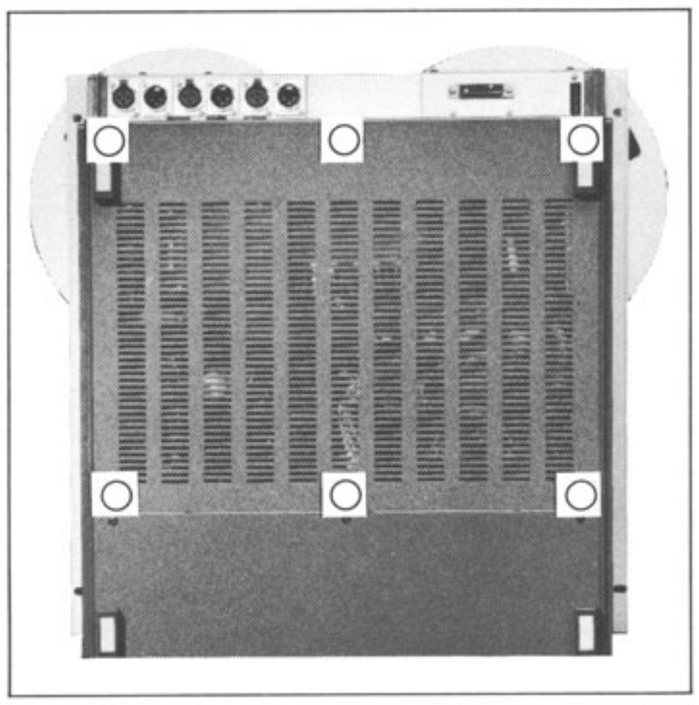

- Unfasten 6 screws M4 (hexagon-socket-screw key 2.5 mm).
- Remove rear cover.

Rear cover, lower

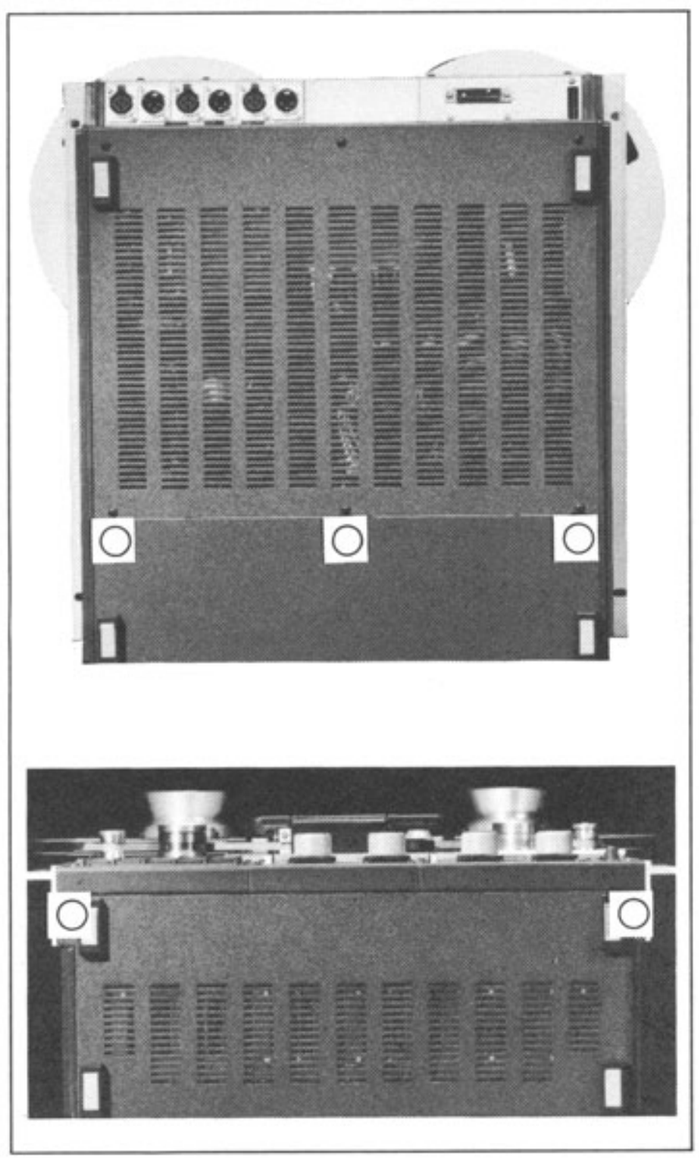

CAUTION

This cover should only be removed by trained maintenance engineers because it exposes the master board with the CMOS bus!

- Unfasten 5 screws M4 (hexagon-socket-screw key 2.5 mm).
- Remove rear cover.

Top cover

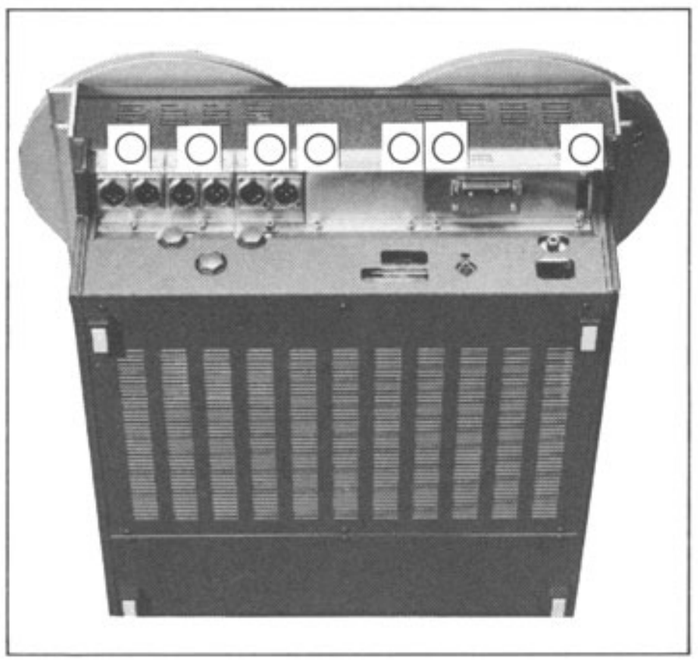

Remove this cover only if the power switch or the power supply unit needs to be dismantled!

- Unfasten 7 screws M4 (hexagon-socket-screw key 2.5 mm).
- Lightly raise cover and slide it out toward the back.

Panel flap

- The panel flap can be opened and locked in two positions by loosening the two captive special screws (hexagon-socket-screw key 2.5 mm). The flap is released by pushing lightly upward on the support (on the right-hand side of the flap). Secure the flap with your left-hand to prevent it from slamming shut.
- Each of the panel modules is secured to the panel flap with two or four screws M3 (hexagon-socket-screw key 2 mm).

Wooden side panels

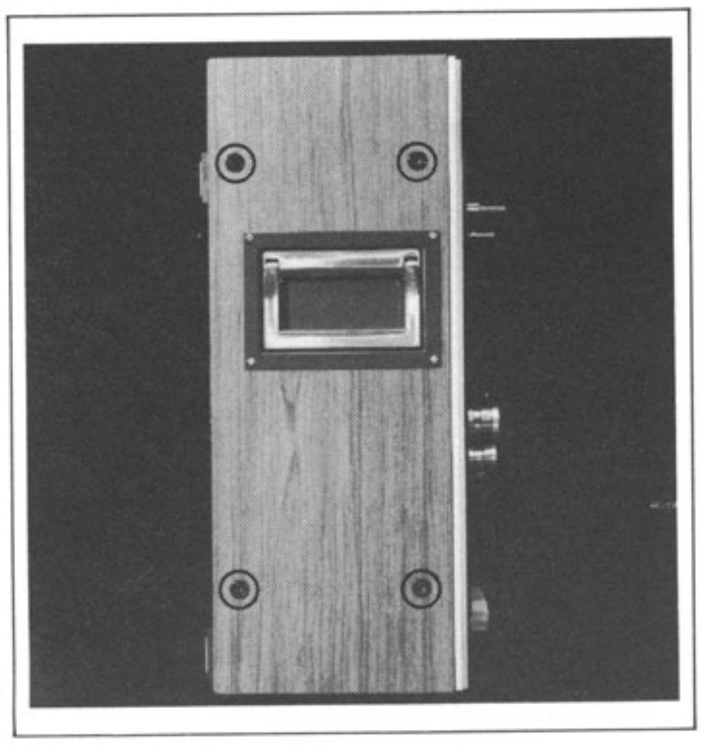

- Unfasten 2 screws M5x20 and 2 screws M5x35 (hexagon-socket-screw key 4 mm.
- Remove side panels

3.2.2
Headblock

- Remove cover of headblock assembly (3.2.1.)

CAUTION

To prevent inadmissible magnetization of the soundheads, switch the recorder off before removing or installing the headblock!

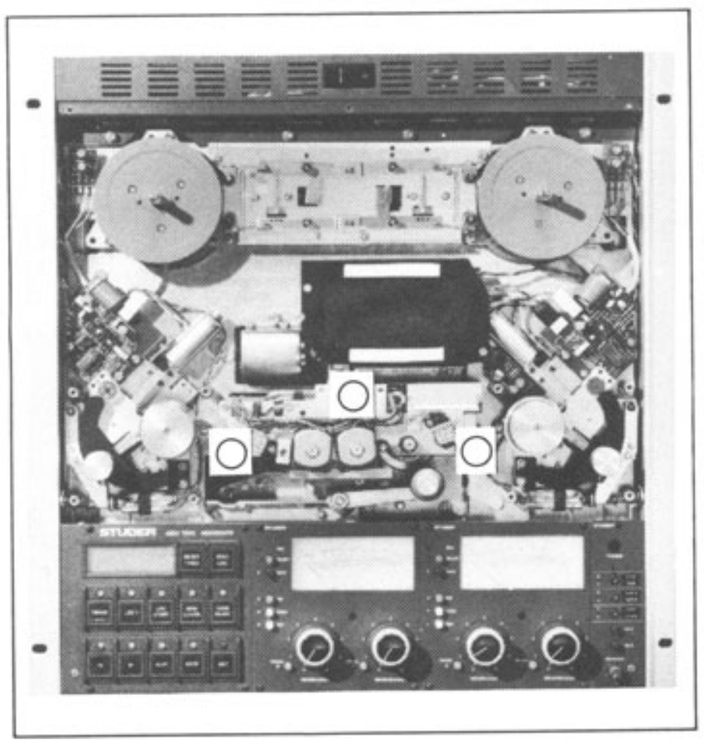

- Unfasten 3 screws M4 (hexagon-socket-screw key 3 mm).
- Carefully slide out headblock assembly so that the capstan shaft will not be damaged.
- Do not turn headblock upside down, otherwise the 3 screws fall out.

3.2.3
Tape tension sensors

- Remove covers of headblock, tape transport, and tape tension sensors as well as upper rear cover as described in Section 3.2.1.

Left-hand tape tension sensor

- Unplug the flat cable labeled TAPE TENSION LEFT at the top connector of the spooling motor control board.
- Pull off two stranded connecting wires (grn, vio) of the EDIT solenoid.
- Unplug 3-pin connector on the tape tension sensor board.

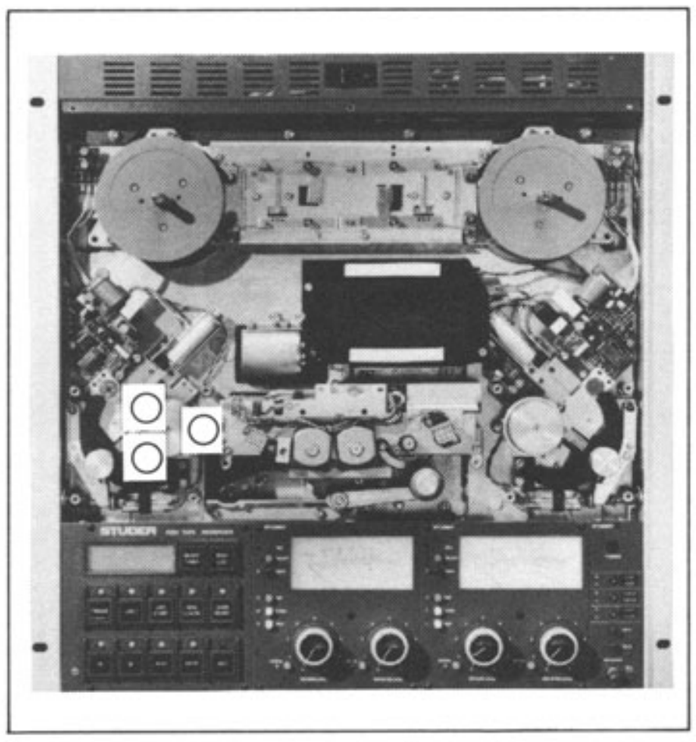

- Unfasten 3 screws M3 (hexagon-socket-screw key 2.5 mm), lightly lift tape tension sensor and guide flat cable carefully through the tape transport chassis.
- Remove tape tension sensor.
- Do not place tape tension sensor upside down, otherwise the 3 screws fall out.

When reinstalling, ensure that:

- Polarity of EDIT solenoid connections is not confused (vio = +),
- Flat cable is plugged into the upper connector (relative to machine in upright position) on the spooling motor control board.

Right-hand tape tension sensor

- Unplug the flat cable labeled TAPE TENSION RIGHT at the lower connector of the spooling motor control board.
- Pull off two stranded connecting wires (grn, vio) of the EDIT solenoid.
- Pull off 3-pin and 4-pin connector on the tape tension sensor board.
- Remove cable duct covers and guide out the flat cable.

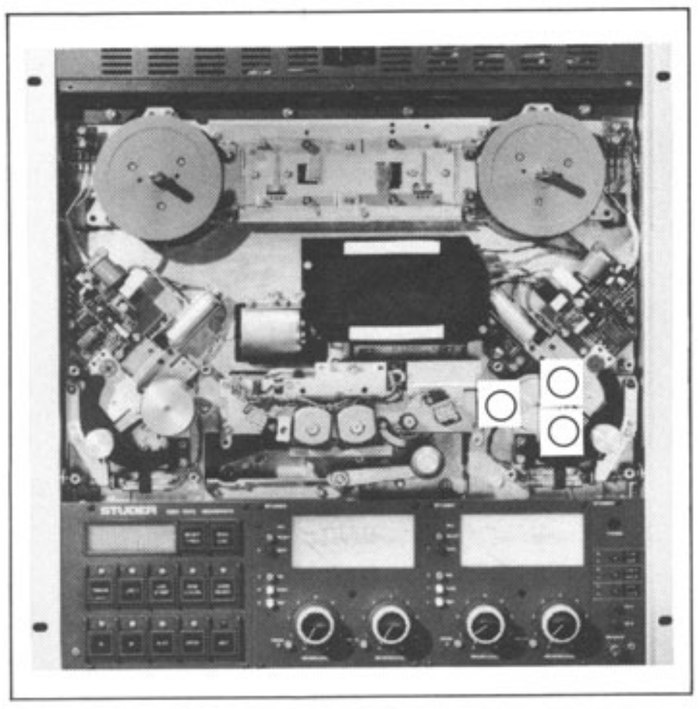

- Unfasten 3 screws M3 (hexagon-socket-screw key 2.5 mm), lightly lift tape tension sensor and carefully guide flat cable out through the tape transport chassis.
- Remove tape tension sensor.
- Do not place tape tension sensor upside down, otherwise the 3 screws fall out.

When reinstalling ensure that:

- Polarity of EDIT solenoid connections is not confused (vio = +),
- Flat cable is plugged into the lower connector (relative to the upright machine) on the spooling motor control board.

3.2.4
Pressure roller assembly

- Remove headblock cover, headblock and upper rear cover (3.2.1).
- Pull off 2 stranded connecting wires (gry, vio) of the pressure solenoid.
- Unhook return spring at pressure arm.

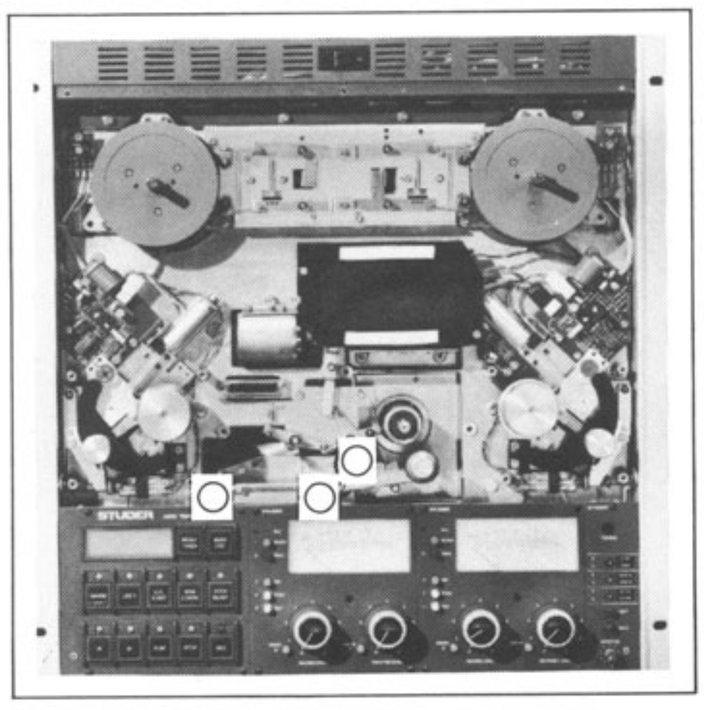

- Unfasten 3 screws M4 (hexagon-socket-screw key 3 mm).
- Carefully draw pressure unit out toward the front.

When reinstalling ensure that:

- The pin on the pressure arm is seated into the plastic lug,
- The polarity of the pressure solenoid connections is not confused (vio = +).

3.2.5
Tape lift assembly

Lifter assembly

- Remove headblock cover (3.2.1) and headblock (3.2.2).
- Unhook return spring on pressure arm.

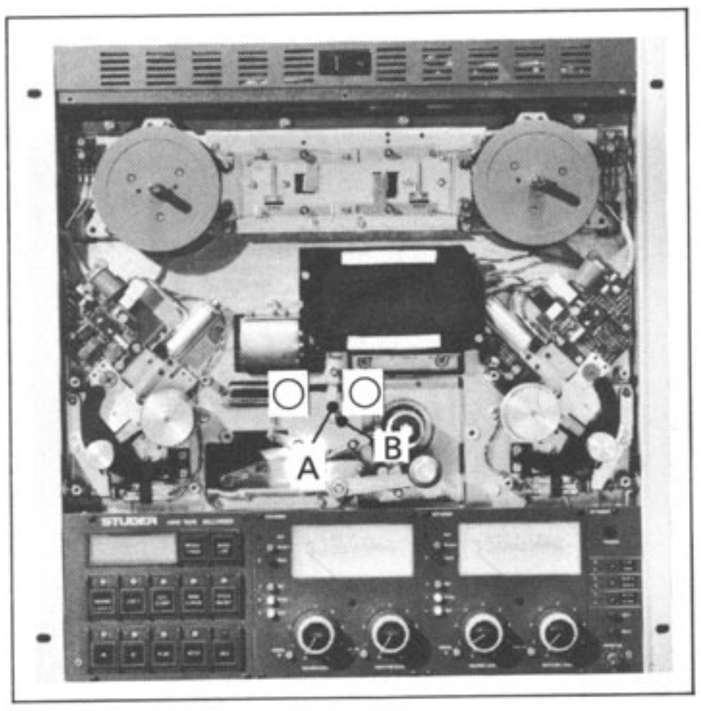

- Unfasten 2 screws M3 (hexagon-socket-screw key 2.5 mm).
- Slide lifter assembly out toward the left while simultaneously disengaging the plastic lug at the pressure arm pin.

- When reinstalling ensure that the coupling pin (A) ist located to the left of the roller (B).

Lifter solenoid

- Remove monitor unit (3.2.11) if installed.

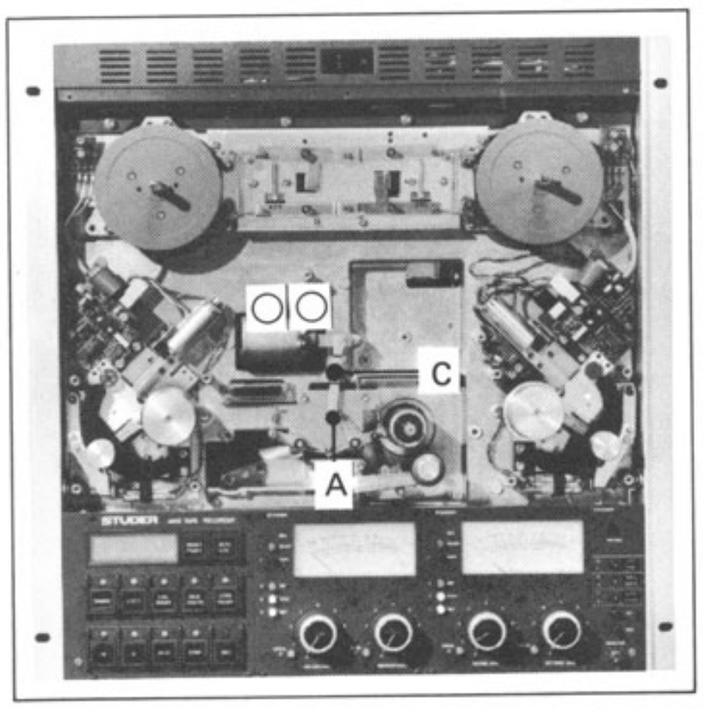

- Remove circlip (C).
- Lift lever (A).
- Unfasten 2 screws M4 (hexagon-socket-screw key 3 mm), draw out solenoid from the front.
  Do not tilt solenoid, otherwise the armature drops out.
- Pull off 2 stranded connecting wires (wht, vio).

- When reinstalling ensure that polarity of connections is not confused (vio = +).

3.2.6
Tape brakes

The recorder must be positioned horizontally in order to remove the brakes!

- Remove tape transport cover (3.2.1).
- Remove reel supports, 3 screws M3 each (recessed head).

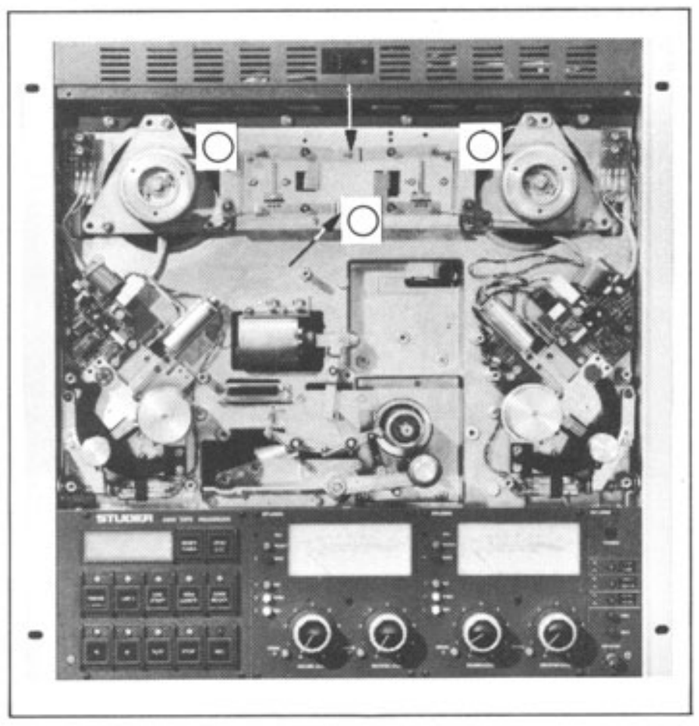

- Unfasten 3 screws M3 (hexagon-socket-screw key 2.5 mm).
- Press lightly on the two brake levers (arrow) to release the brakes to the point where the brake chassis can be carefully lifted.

CAUTION

Ensure that the brake bands are not kinked and avoid touching the contact surface with your fingers!
Kinked brake tapes must be replaced. Clean contaminated tapes with ethanol!

- Pull off connecting wires of edit solenoid (grn, vio) and brake solenoid (brn, vio).

- When reinstalling ensure that the polarity is correct (vio = +).

IMPORTANT

The brakes require readjustment after the brake chassis has been installed (3.3.1).

3.2.7
Spooling motors

Position the recorder horizontally in order to remove the spooling motors!

- Remove tape transport cover (3.2.1).
- Remove brake chassis (3.2.6).
- Pull off 4 stranded leads on each connecting board.
  Note: The sequence of the wires is not always the same to minimize hum-field interference. Please note sequence before disconnecting!

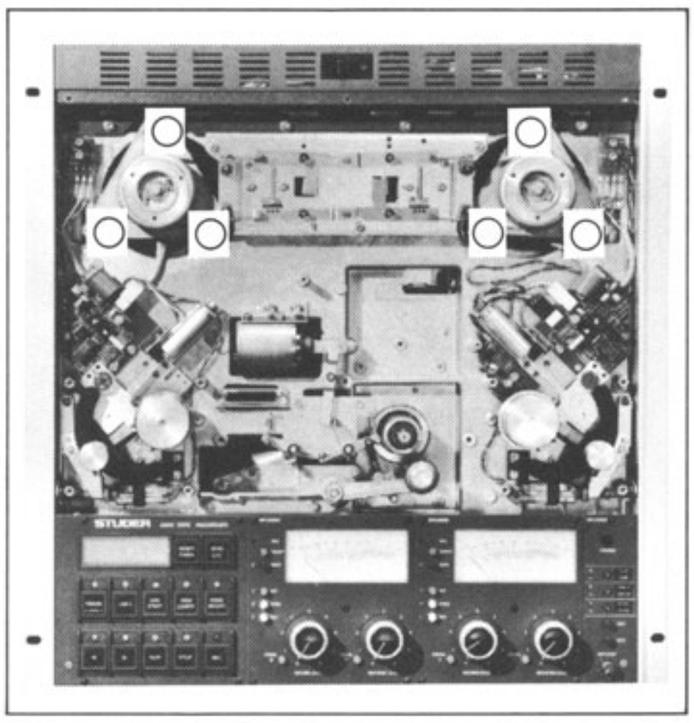

- Unfasten 3 screws M4 each (hexagon-socket-screw key 3mm).
- Lift out motor toward the top without touching the brake roller.

3.2.8
Spooling motor control

Remove the complete assembly if fuse F1 (1.6 A s/b) on the spooling motor control board requires replacement.

- Remove rear upper panel and left-hand wooden side panel if installed (3.2.1).

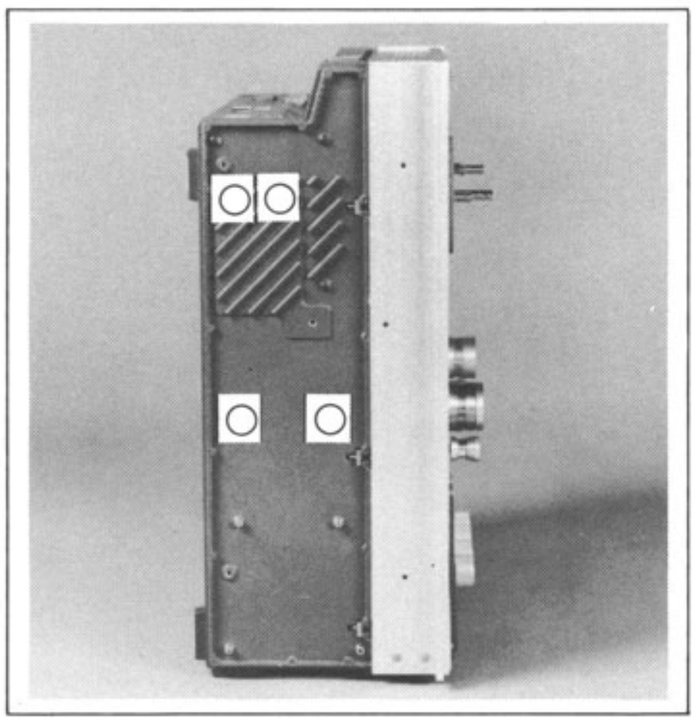

- Unfasten 4 screws M4 (hexagon-socket-screw key 2.5 mm). The stranded leads to the spooling motor control board are sufficiently long that they do not have to be pulled off when replacing the fuse.
- Unscrew shock protection element (2 × M3, hexagon-socket-screw key 2.5 mm).

3.2.9
Capstan motor

Remove the complete assembly if the fuse F1 (500 mA s/b) on the capstan motor control board requires replacement.

- Remove upper rear panel (3.2.1).
- Unplug flat cable CAPSTAN CTR (on basis board, second connector from the right).
- Open cable duct, guide out flat cable.
- Lift shock protection element off the lower power transformer terminals.
- Pull off 2 blue stranded wires (power transformer terminals 10 and 19 for the 4-pole capstan motor, 12 and 17 for the 2-pole capstan motor).

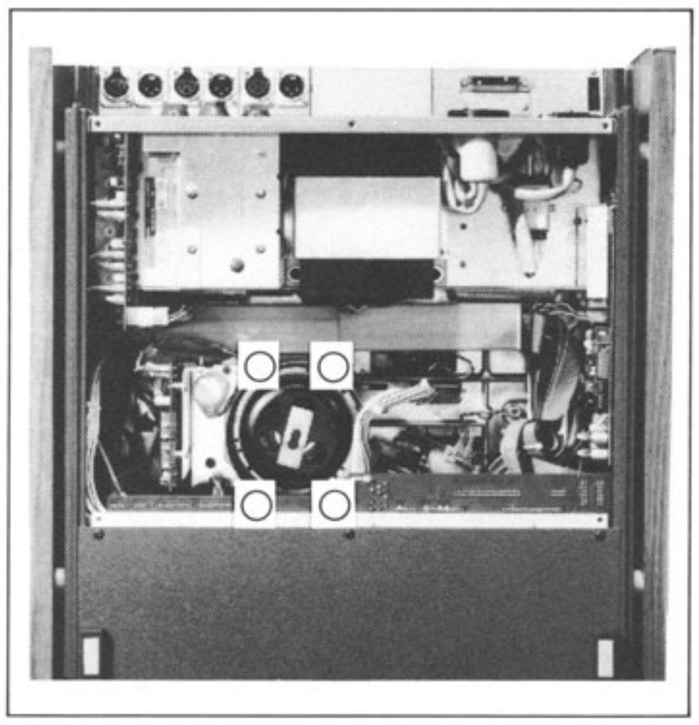

- Unfasten 4 screws M4 (hexagon-socket-screw key 3 mm) (the lower two screws are accessible through holes in the basis board).
- Draw capstan unit (ground capstan shaft) carefully toward the rear.
- Remove shock protection (2 x M3, hexagon-socket-screw key 2.5 mm).

- Proceed carefully when reinstalling to ensure that the capstan shaft will not be damaged.
- No specific polarity (!) is required when reconnecting the two blue stranded wires (terminals 10 and 19 or 12 and 17 on the power transformer).

3.2.10
Power supply unit

- Remove upper rear panel, top cover, and if installed also the wooden side panels (3.2.1).
- Unplug connecting leads on power supply unit.
- Unfasten all connector panels or filler panels (7 x M4, hexagon-socket-screw key 3 mm).
- Unfasten stabilizer board (multipoint connector and 6 stranded leads from top to bottom: blu, red, org, brn, yel, grn), 2 screws M4 (hexagon-socket-screw key 2.5 mm) on the right side wall.
- Unscrew spooling motor control board, 4 x M4 (hexagon-socket-screw key 2.5 mm) on the left side wall. Since the length of the connecting leads is sufficient, they do not have to be pulled off.
- Lift off shock protection of the lower power transformer terminals, disconnect 2 x blu (terminals 10 and 19 or 12 and 17), blk (terminal 14), and red (terminal 15).
- Unfasten 6 mounting screws M4 (hexagon-socket-screw key 2.5 mm, 3 each on the left and on the right side wall). Hold power supply unit so that it will not drop into the recorder.
- Carefully slide power supply unit out through the rear until the two rear mounting holes in the side walls are aligned with the two front tapped holes in the power supply; then secure the power supply temporarily with 2 of the mounting screws.
- Disconnect leads on the two phase-shift capacitors (terminals on each from the top or No. 2: org, bottom terminal or No. 1: brn).
- Unfasten temporary mounting screws and remove power supply unit toward the top.

- When reinstalling, ensure that the stranded connecting leads of the phase-shift capacitors are not pinched.
- No specific polarity (!) is required for the two blue stranded connecting wires (power transformer terminals 10 and 19 or 12 and 17).

3.2.11
Monitor unit

- Unfasten rear upper panel and tape transport cover (3.2.1).
- Unplug monitor terminal (on basis board, second connector from the left).
- Open cable duct, guide out monitor cable harness.
- Unfasten 2 screws M3 (hexagon-socket-screw key 2 mm), remove monitor unit, and carefully guide cable harness out of the tape transport chassis.

3.3 MECHANICAL ADJUSTMENTS

Note:

Jumper JS 3 of the TAPE DECK CONTROLLER must be removed for making the following adjustments. As a result, the monitoring functions (tape tension, tape movement, etc.) are interrupted to prevent triggering of stop commands if deviations from the reference values occur because of the adjustment work.

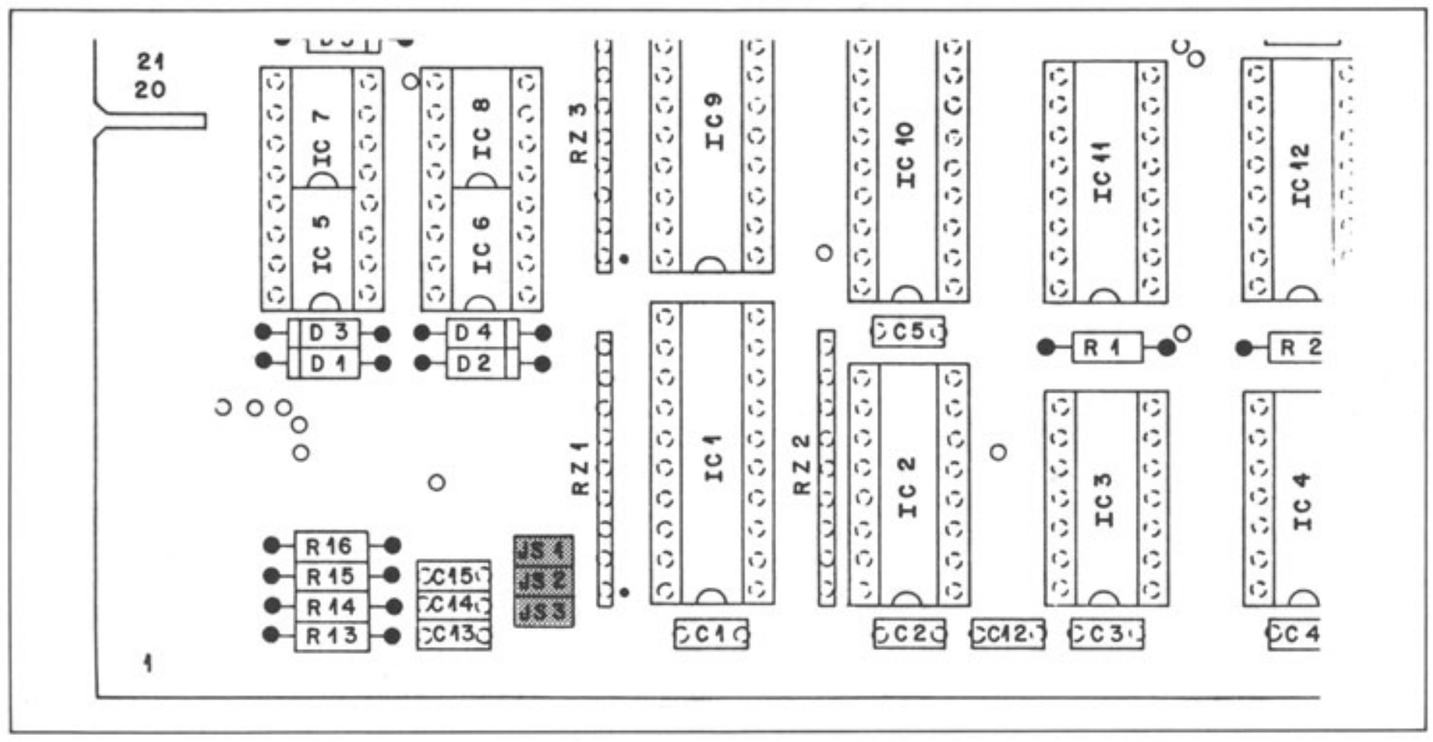

3.3.1 Tape brakes

Inadequate maintenance or incorrect adjustment of the tape brakes can lead to tape tangles or torn tapes. Check in regular intervals that the braking action is smooth and that no loops are formed even when the diameters of the two pancakes differ widely. Check brake bands for wear and contamination.

The tape brakes are self-adjusting: the braking action remains constant over wide ranges even with varying friction coefficients.

Preparatory steps

Remove tape transport cover; remove covers of the tape tension sensors. Detach 3-pin connector of the end-of-tape sensor on the left-hand tape tension sensor.

The brake bands and the brake linings must be absolutely clean and free of grease. Contaminated brake bands and brake linings can be cleaned with ethanol. Avoid touching them after they have been cleaned.

The brake bands should be free of kinks. Contact with the brake lining along their full width is required.

When replacing the brake drum ensure that there is no residual glue on the new brake drum.

Should the braking action be insufficient after the brake bands have been replaced, they can be roughened with SCOTCH pot cleaning pads.

The braking deceleration can be adjusted by hooking the brake springs into three different positions. Refer to picture below with springs (A) in the maximum position, springs (B) in the middle position.

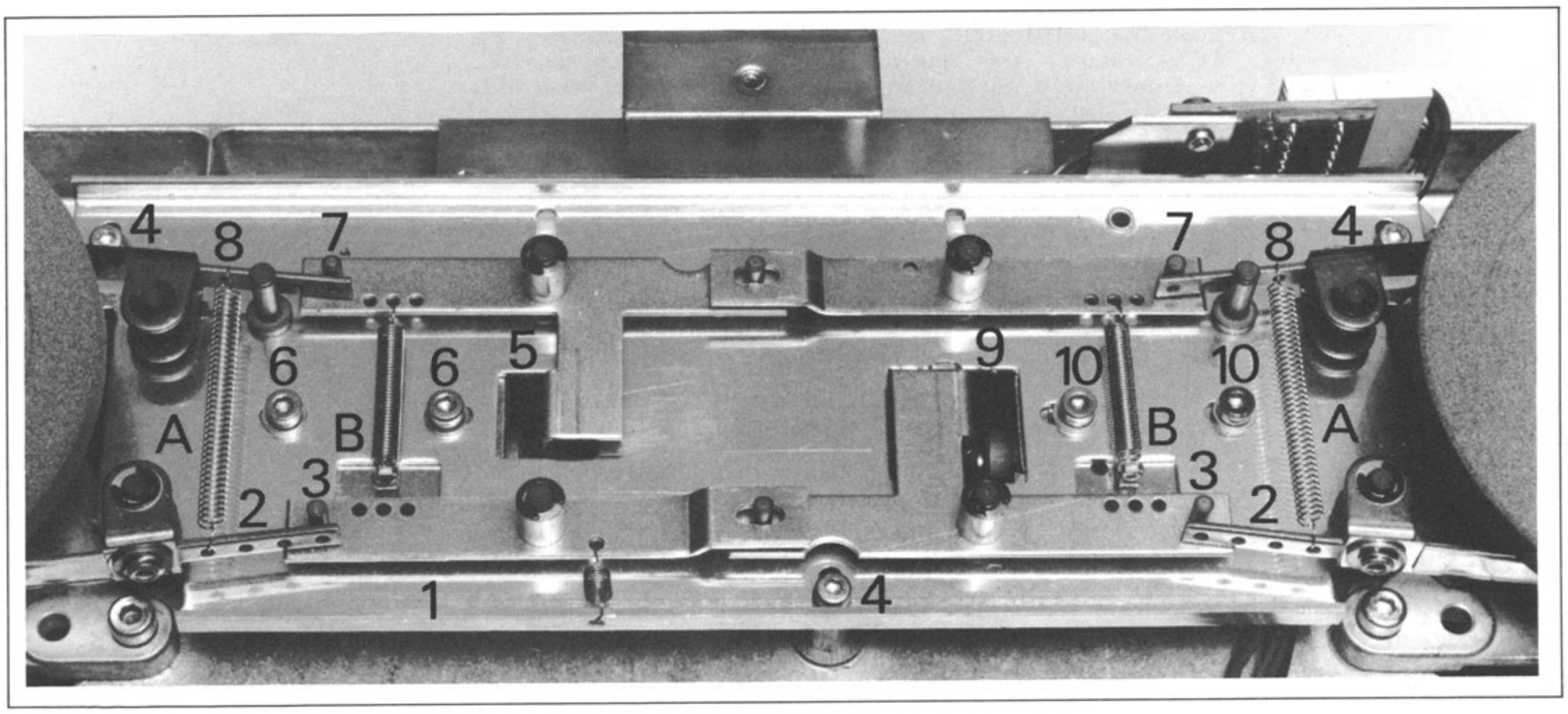

Basic adjustment of the brake chassis

Switch tape recorder off.
Shift brake chassis (1) so that the distance between the two brake levers (2) and the lifting pin (3) is approx. 1 mm. Secure the setting with three hexagon-socket-head cap screws (4) (key size 2.5 mm). Ensure that the chassis is only shifted parallel. Switch recorder on.

Check that the two brake systems are released simultaneously by the two lifting pins. Should this not be the case, check that the spooling motors are positioned correctly. If minor differences still remain they can be corrected by lightly bending the levers (2).

Adjusting the EDIT solenoid

Also unplug the 3-pin connector of the right-hand tape tension sensor!
The EDIT solenoid (5) must be energized for making this adjustment:
Connect recorder to an AC outlet and switch power on.

Shift the two mounting screws (6) (hexagon-socket-screw key 2.5 mm) of the solenoid (5) so that a clearance of approximately 1 mm is obtained between the brake lever (8) and the lifting pin (7). The lever (2) should contact pin (3) after this adjustment.

Retighten the two mounting screws (6).

Adjusting the brake solenoid

Press the PLAY key (brake released) before adjusting the brake solenoid.

Unfasten the two mounting screws (10)(hexagon-socket-screw key 2.5 mm) of the brake solenoid (9) and shift it so that the tip of the lever (2) travels 2 to 3 mm between the neutral position and released brake. Retighten the two mounting screws (10).

The two spooling motors should rotate freely when the brake system is released. Both brake levers should lift in parallel.

Correct functioning of the brakes can be checked by brief forward and backward rotation of the spindles (power switched off).

Measuring the braking torques

Switch recorder on (STOP lamp illuminated) for measuring the EDIT braking torque.

Mount an empty reel with a hub diameter of approx. 100 mm that contains approximately 2 to 3 m of tape in the take-up or supply direction.

Hook spring dynamometer (0...5 N) into leading end of tape and pull gradually forward (in the direction of the arrow).

The EDIT braking torque should measure 0.8 to 1.10 N (80...110 p) in the take-up or the supply direction. Correction is possible with spring (A).

Reconnect the 3-pin connectors of the tape-end sensors of both tape tension sensors before measuring the braking torque.

The tape tension sensors must be in their neutral position.

The braking torque in the supply direction should measure 2.6 to 3.2 N (260...320 p). The difference in braking torque between the left and the right side should not exceed 0.5 N (50 p).

Correction is possible with spring "B".

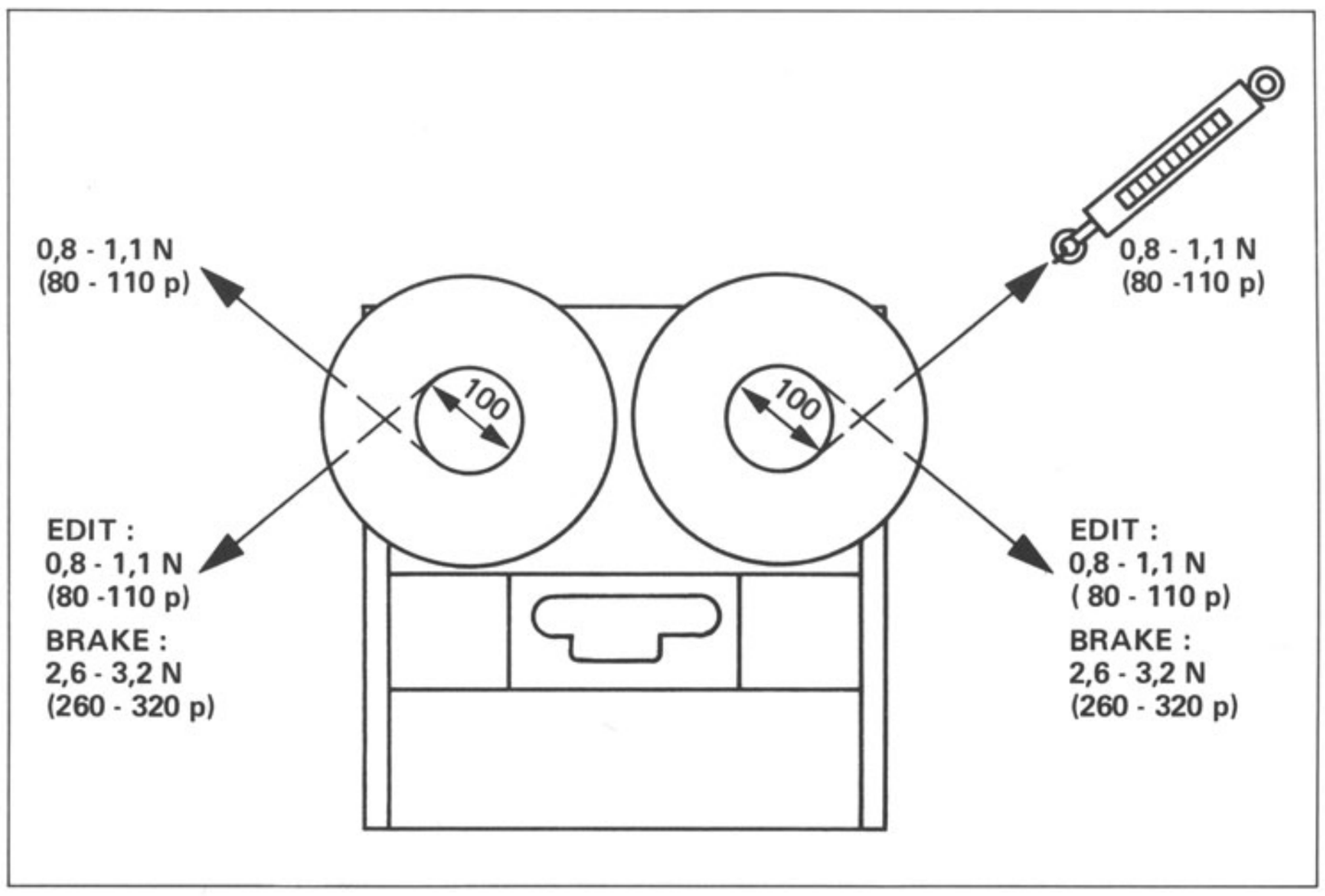

3.3.2
Pressure unit

The pressure arm is actuated by a solenoid. The pinch roller force is determined by a spring.

Preparatory steps

Switch recorder off. Unfasten pressure roller and headblock. Unplug TAPE DECK CONTROLLER, insert extender board in its place, and interconnect terminals 17 and 21 on the extender board.

Switch recorder on. The pressure solenoid picks up but the capstan motor does not rotate.

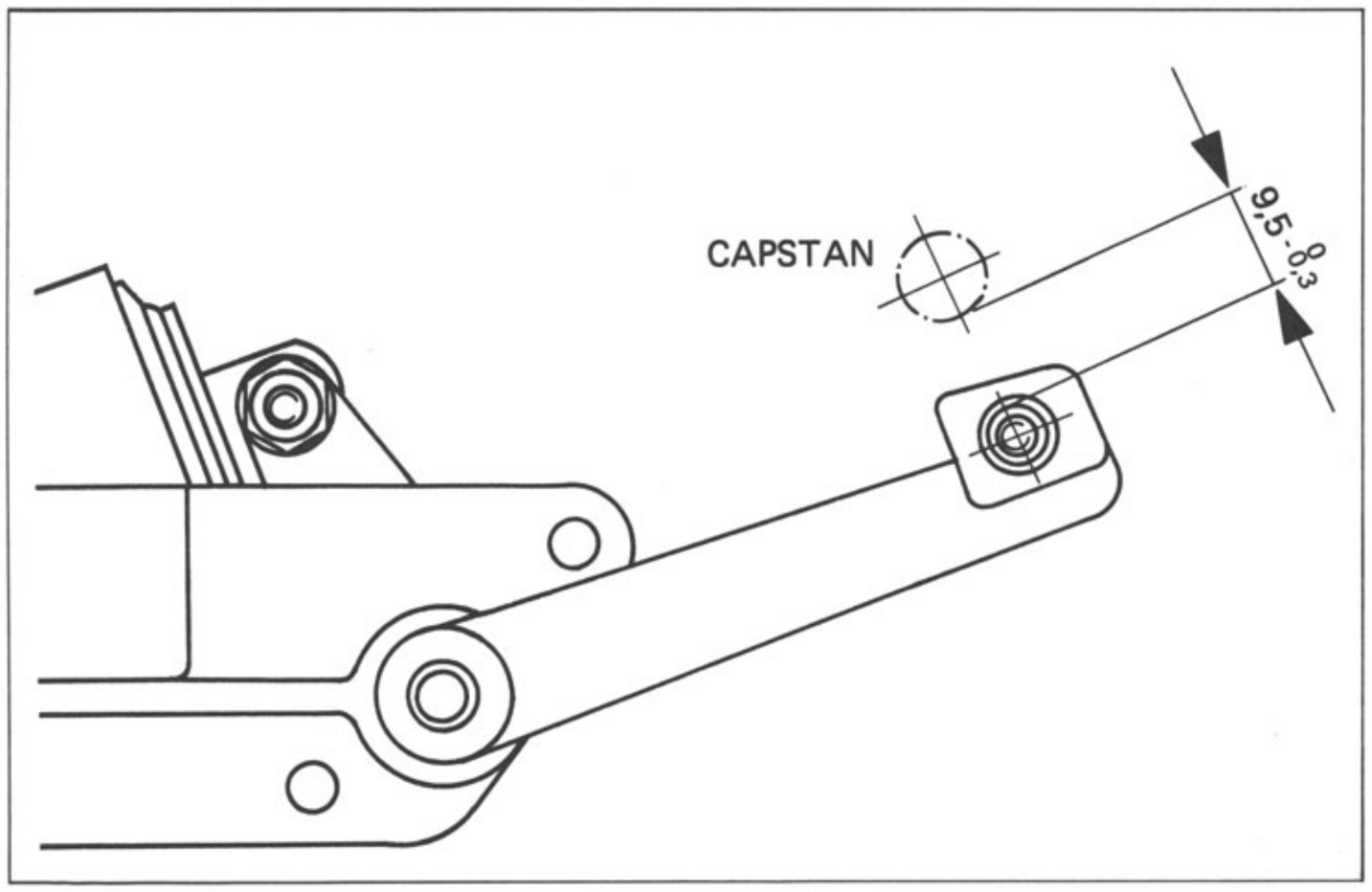

Adjustment

Measure the distance between the capstan and the pressure roller shaft with the pressure unit alignment gauge (in development) or with the inside feeler of slide calipers (hold gauge horizontally).
Desired distance: 9.2 to 9.5 mm. If the measurement is outside this tolerance range, lightly loosen the 2 mounting screws (hexagon-socket-screw key 3 mm) and shift the pressure solenoid slightly until the desired dimension is attained. Retighten screws of pressure solenoid.

CAUTION

Proceed with utmost caution to ensure that the hardened calipers do not damage the ground capstan shaft or the pressure roller shaft!

Switch recorder off. Replace extender board with the TAPE DECK CONTROLLER. Reinstall headblock and pressure roller.

Checking the pressure roller force

Switch recorder off. Unscrew tape transport cover and pressure roller cover; unplug the 3-pin connectors of the two tape tension sensors. Fasten a nylon string to the thread of the pressure roller shaft, and hook the spring dynamometer into a loop of the string.

Switch recorder on and select PLAY mode. Pull the spring dynamometer at a right angle to the pressure arm until the pressure roller lifts off the capstan.

The spring dynamometer should indicate 8...10 N (800...1000 p).

Switch recorder off. Reconnect the two 3-pin connectors of the tape tension sensors. Reinstall pressure roller cover.

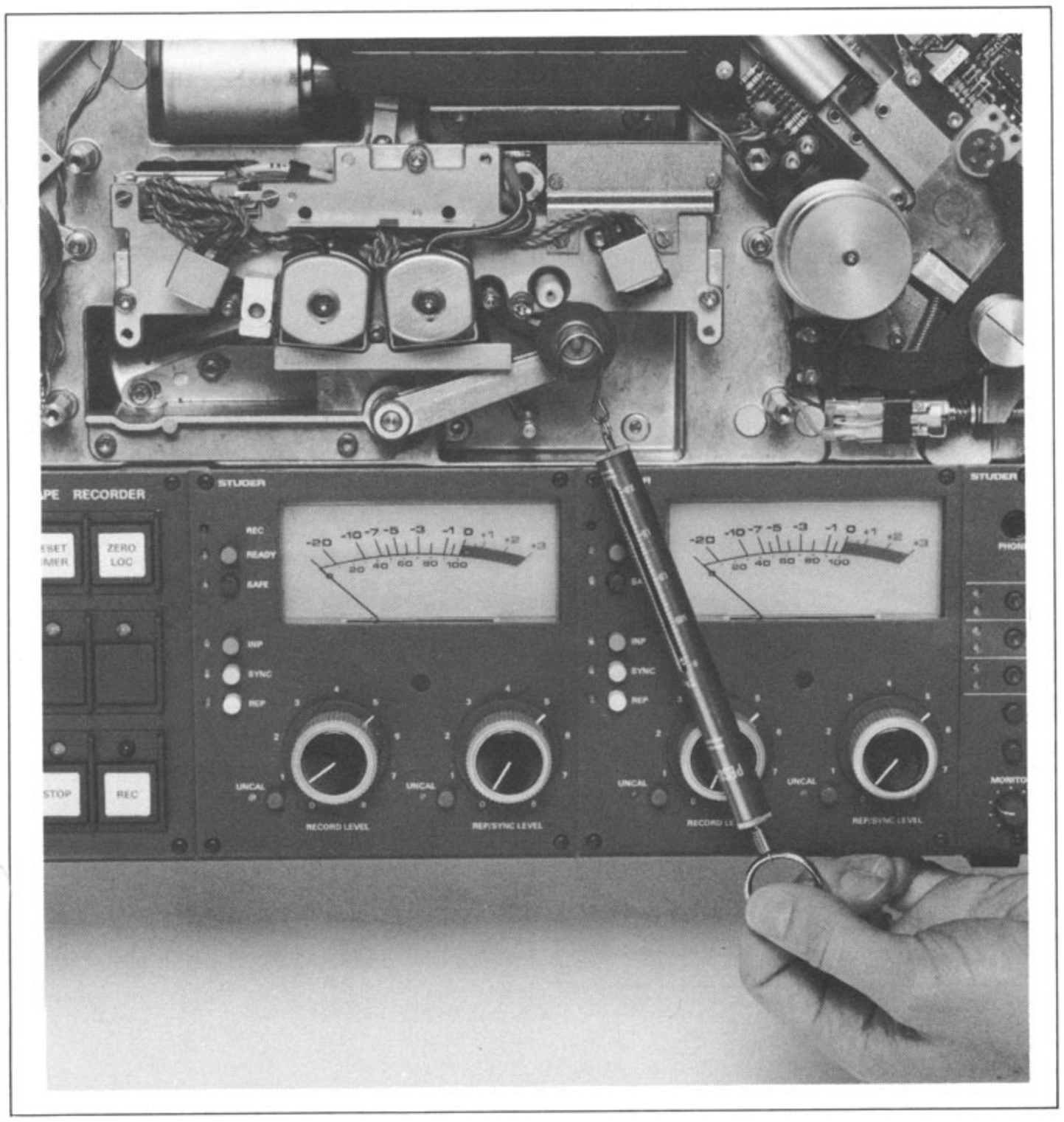

3.3.3
Tape lift

During spooling, the two tape lift pins are moved by the tape lift solenoid so that the tape no longer contacts the face of the soundhead. This prevents unnecessary wear of the soundheads.

Preparatory steps

Switch recorder off.

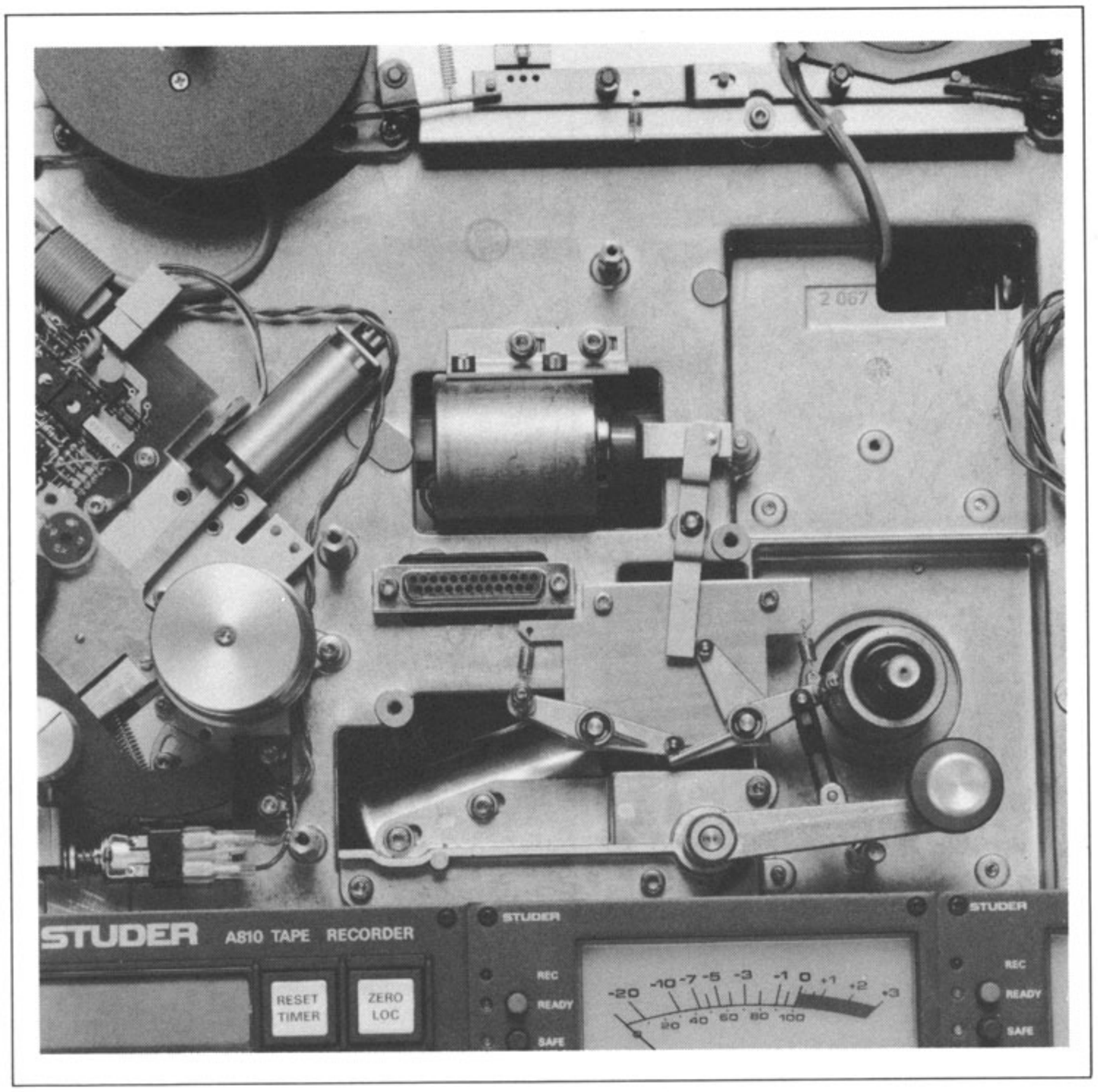

Adjusting the tape lift solenoid

Mount tape (reel diameter 18 cm) and switch recorder on.

Press one of the spooling keys.
Push pressure roller by hand against the capstan up to the stop position. The tape should contact neither the pressure roller nor the capstan. Should this still be the case, loosen the two mounting screws (hexagon-socket-screw key 3 mm) of the tape lift solenoid. Press one of the spooling keys and shift tape lift solenoid slightly to the left. Retighten mounting screws and repeat check.

When the lift solenoid is deenergized, the left-hand lifting pin must not touch the anti-scrape flutter roller or the erase head.

Press STOP key and check that the armature movement is not restricted; if necessary loosen one mouting screw of the tape lift solenoid and slightly twist solenoid, until the armature moves freely. Retighten the mounting screw.

3.3.4
Tape tension sensors

Note

The illustrations always refer to the left-hand tape tension sensor.

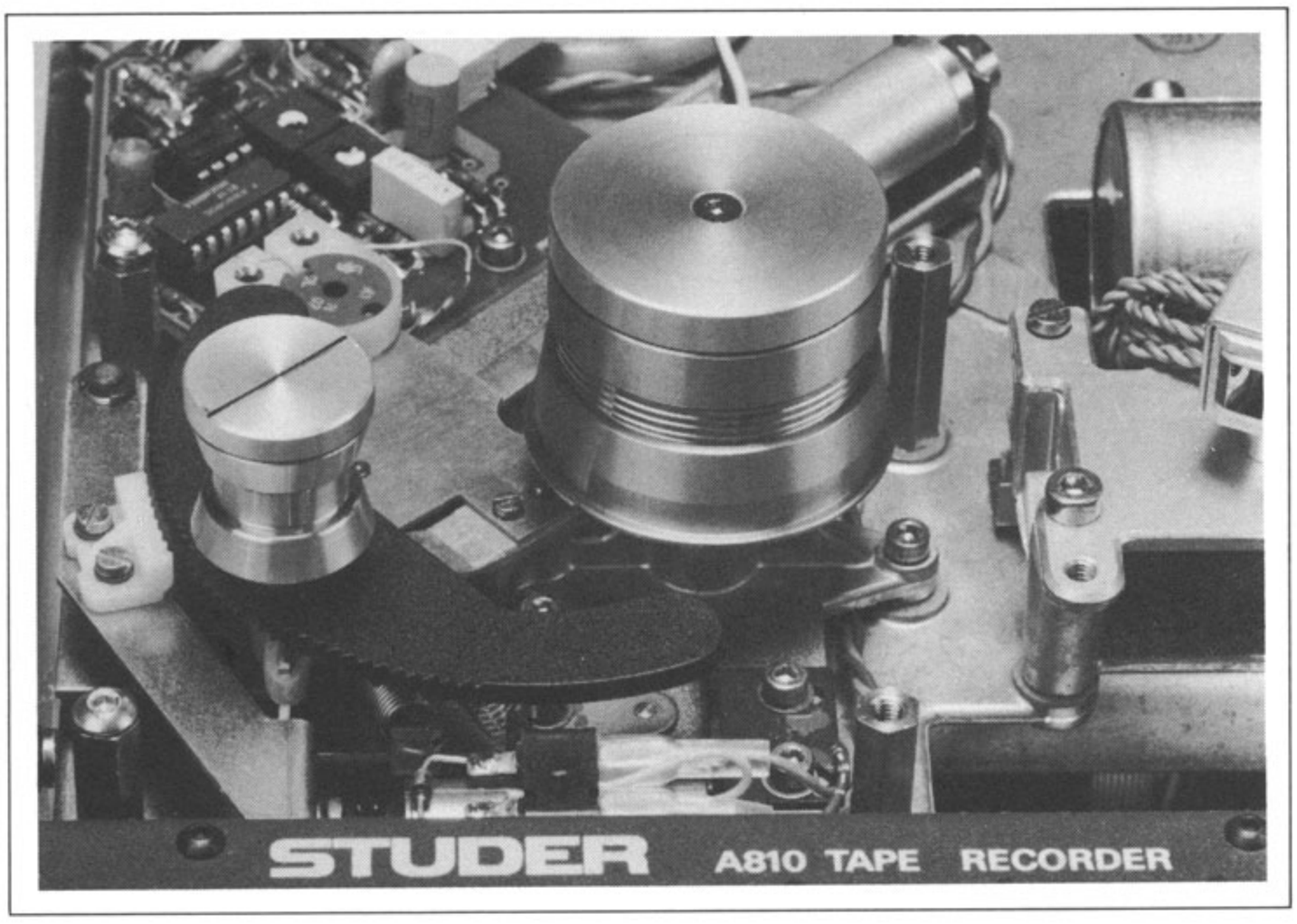

Checking the mechanical functions

Mobility of bearing und dashpot:

Manually push the tape tension sensor from its neutral position to the end stop. No grinding or rattling noise should be audible. The protective flap should not touch anywhere; the tape tension spring and the stop spring should not touch any other parts.

Damping:

Check for continuous and immediate damping in tensioning direction and also the function of the non-return valve in the dashpot cylinder.
A replacement dashpot requires no adjustments since these have been made at the factory.

CAUTION: Ensure that the cylinder base is not twisted when installing the dash pot!

Checking the tape travel:

With tape tension sensor installed and tape threaded, check the tape travel in PLAY mode (azimuth adjustment) at the idler roller and the guide roller.

EDIT solenoid

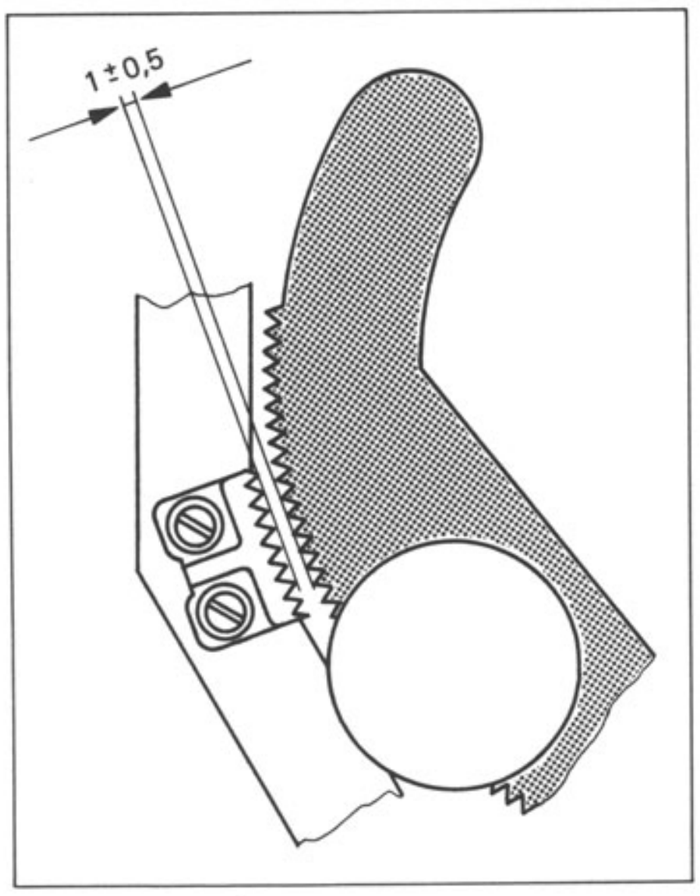

With the EDIT solenoid in the neutral position, the gear segment must be adjusted so that the teeth mesh correctly and parallel into the serration of the toothed disc (slot cover).

The distance between the tips of the teeth of the gear segment and the toothed disc must be 1 mm ± 0.5 mm throughout the entire rotating range of the tape tension sensor.

Adjusting the EDIT solenoid:

CAUTION: Shift the solenoid only parallel to the base plate!

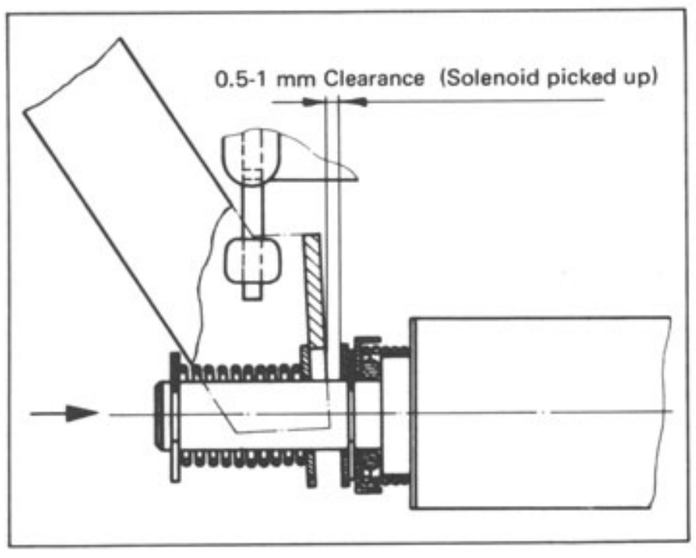

Press the armature with your finger in the direction of the arrow to the stop.

Unfasten the two hexagon-socket-head cap screws (2.5 mm) of the solenoid mounting and shift the solenoid parallel in such a manner that clearance shown in the illustration is attained.

Tighten the two screws and secure them laterally with locking paint.

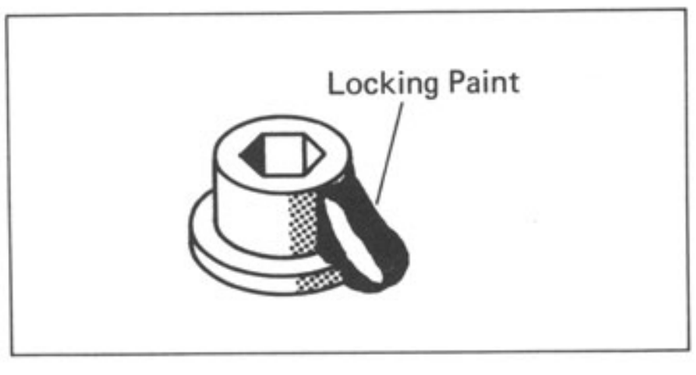

Adjusting the tape tension spring

Switch recorder off. Remove guide roller. Hook tape tension sensor into the end of the shaft (on the thread) and parallel to the side edge of the tape recorder.

The tape tension sensor can be adjusted with the turnbuckle (A). The left-hand tape tension sensor should be adjusted to 1 N ±0.1 N (100 p ±10 p) and the right-hand tape tension sensor to 1.2 N ±0.1 N (120 p ±10 p) for a deflection of the tape tension sensor of -10 degrees.

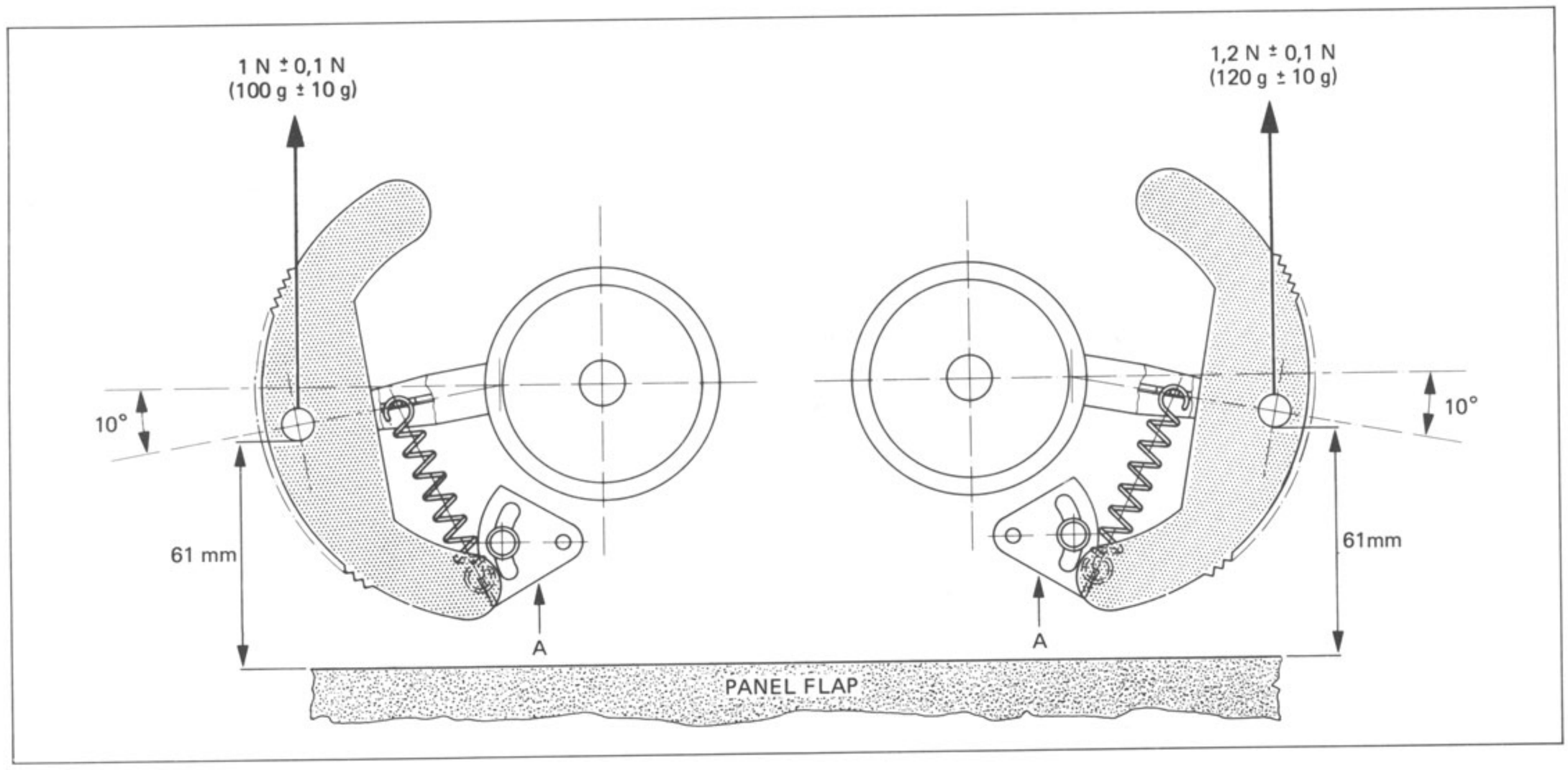

Perform these measurements only in the wind-up direction because of the hysteresis!

After the adjustments have been made, tighten the adjustment screw of the turnbuckle.

Tape tension alignment gauges (with scale division in degrees) available.
Part No. 10.010.001.15.

End-of-tape sensor

(Circuit board on the dashpot)

Switch recorder on.

Move arm of tape tension sensor approx. 2 to 2.5 mm from its end stop and adjust limit switch PCB so that the signal T-TENDL (left-hand tape tension sensor) or T-TENDR (right-hand tape tension sensor) just switches to logic 1 (HIGH).

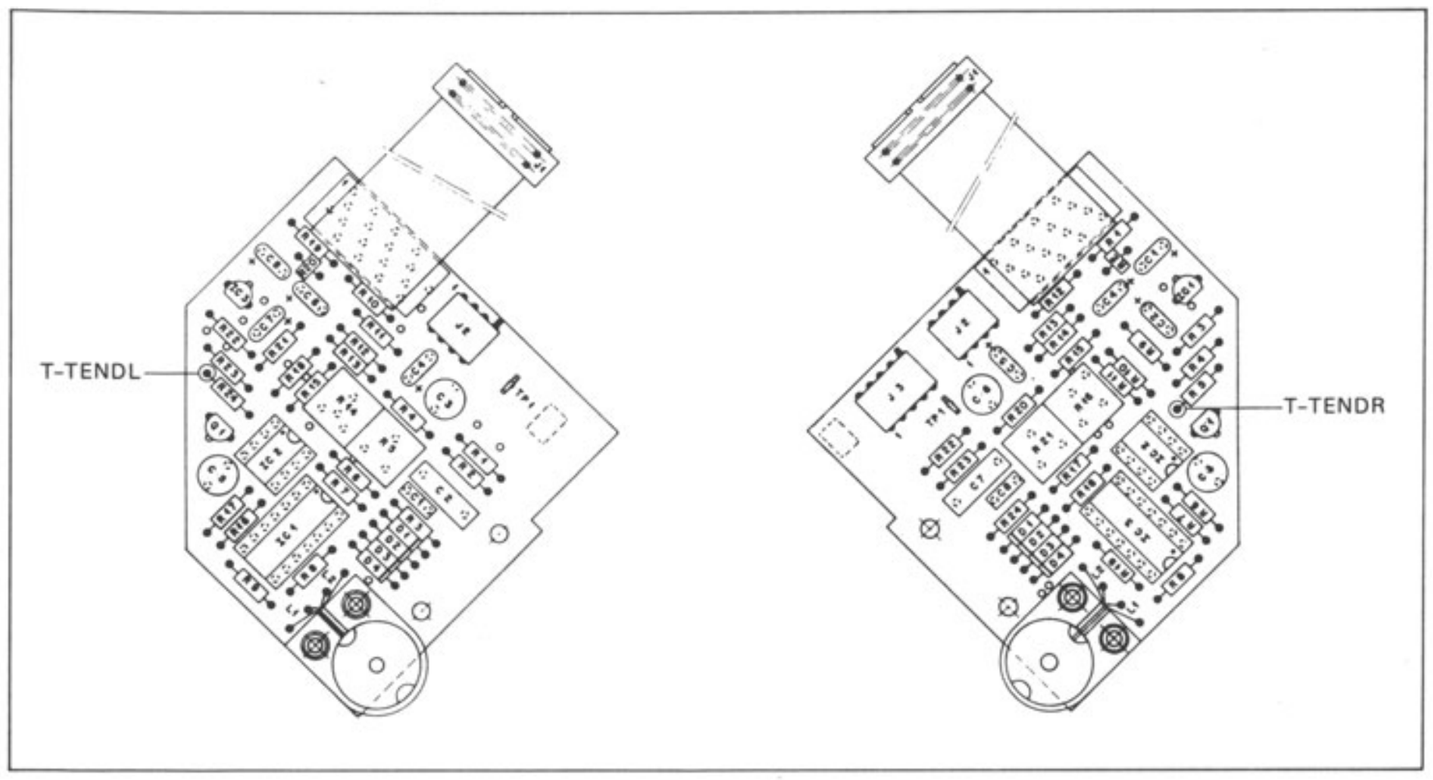

Pretension arm with spring dynamometer (10 N ±1 N or 1 kp ±100 p). The signal T-TEND should remain at logic 0 (LOW).

Tighten adjusting screw and secure it with locking paint.

Reinstall guide roller.
For electrical adjustments of the tape tension sensors refer to Section 3.4!

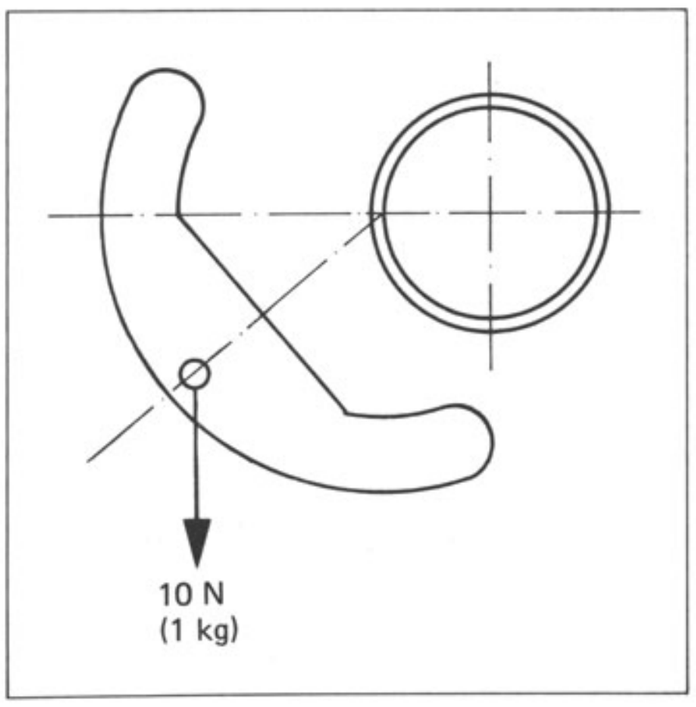

IMPORTANT

Reinstall jumper JS3 on TAPE DECK CONTROLLER!

Adjusting the dashpot:

Before adjusting the dashpot check or adjust the tape tension spring and the electrical alignment of the tape tension sensor (3.4.2)!

The following adjustments of the damping action refer to the left-hand tape tension sensor; deviations for the right-hand tape tension sensor are indicated in brackets!

- Remove cover of the tape transport and the tape tension sensors; turn the top left and right mounting screws of the tape transport cover 2 to 3 turns into the corresponding tapped hole. Place recorder upright on the edge of the work bench so that the front panel is flush with the edge of the bench.
- Calibrate oscilloscope in the DC setting (DC voltage coupling) so, that the voltage readings 0.0 V and +2.4 V fall on the scale lines on the bottom and the top edge of the screen. Adjust sweep rate to approx. 0.1 s per scale division, trigger input to "EXTERN" and "positive slope".
- Connect oscilloscope to TP1 (TP1) of tape tension sensor, signal AN-TTL (AN-TTR), trigger input of oscilloscope at T-TENDL (T-TENDR), as shown in diagram.

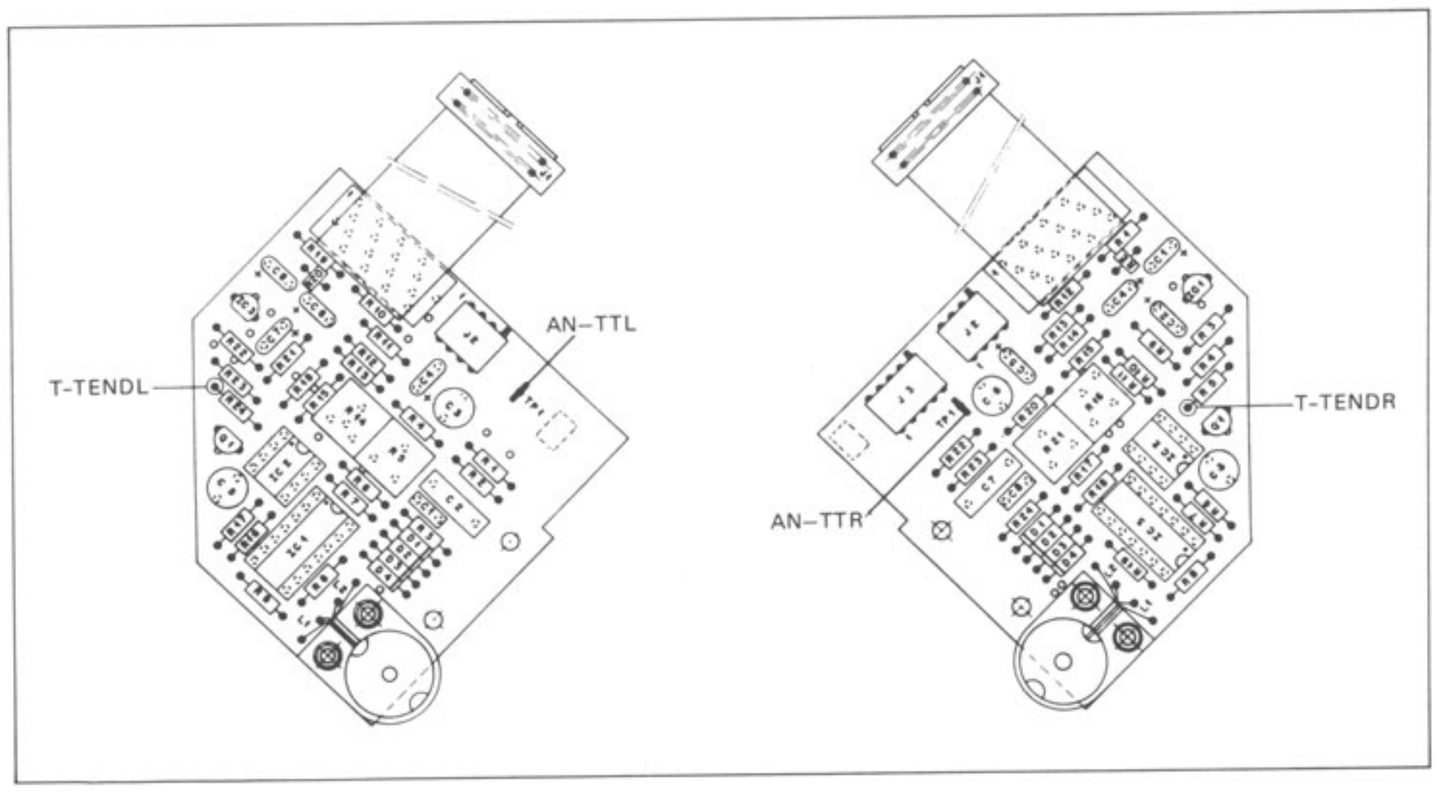

- Tie both ends of a piece of tape with a length of approx. 1 m tape into a loop. Hook one end of the loop into the left-hand (right-hand) screw of the tape transport cover, guide tape vertically down around the guide roller of the tape tension sensor and around the idler roller and further vertically down. Hook weight of 130 g into the opposite end of the loop (see diagram).

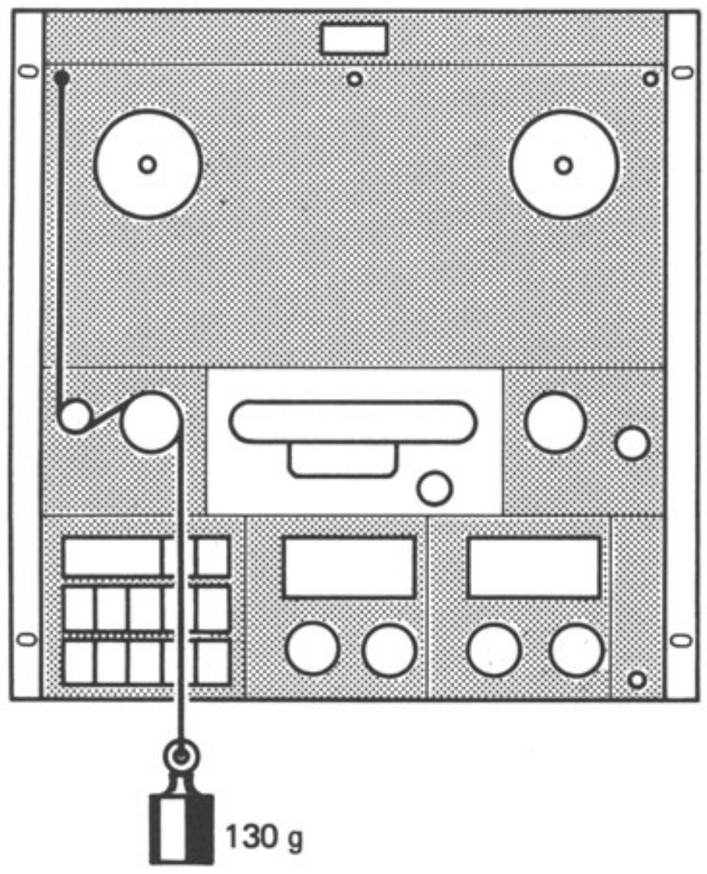

- Remove TAPE DECK CONTROLLER PCB.
- Switch recorder on.
- Manually press guide roller of the tape tension sensor against the lower stop (neutral position) and relax it. The curve appearing on the screen should intersect with the calibrated 2.4 V line at 0.6 s ±0.1 s (1.0 s ±0.1 s).

  Should this not be the case, the remedy depends on the type of dashpot:

- Dashpot with hole in cylinder base:
  Rotate cylinder until the specified damping is attained.

- Dashpot with grub screw:
  Turn grub screw (hexagon-socket-head key 1.5 mm) until the specified damping is attained (turning in the grub screw increases the damping action).

- Dashpot with adjustable nozzle:
  Loosen locknut (wrench size 5.5 mm). Turn hexagon screw of nozzle (wrench size 5.5 mm) until the specified damping is attained (turning in the nozzle screw increases the damping action). Secure nozzle screw with locknut.
- Switch recorder off.
- Reinsert TAPE DECK CONTROLLER PCB.

3.3.5
Headblock

To avoid inadmissible magnetization of the soundheads, switch the recorder off before removing or installing the headblock!

Replacing the soundheads

Remove headblock cover (4 hexagon-socket-head cap screws, 2.5 mm).
Remove headblock after the 3 hexagon-socket-head cap screws (3 mm) have been unfastend.
The soundheads can be removed after the hexagon-socket-head cap screws (A), accessible from below, have been unfastened.

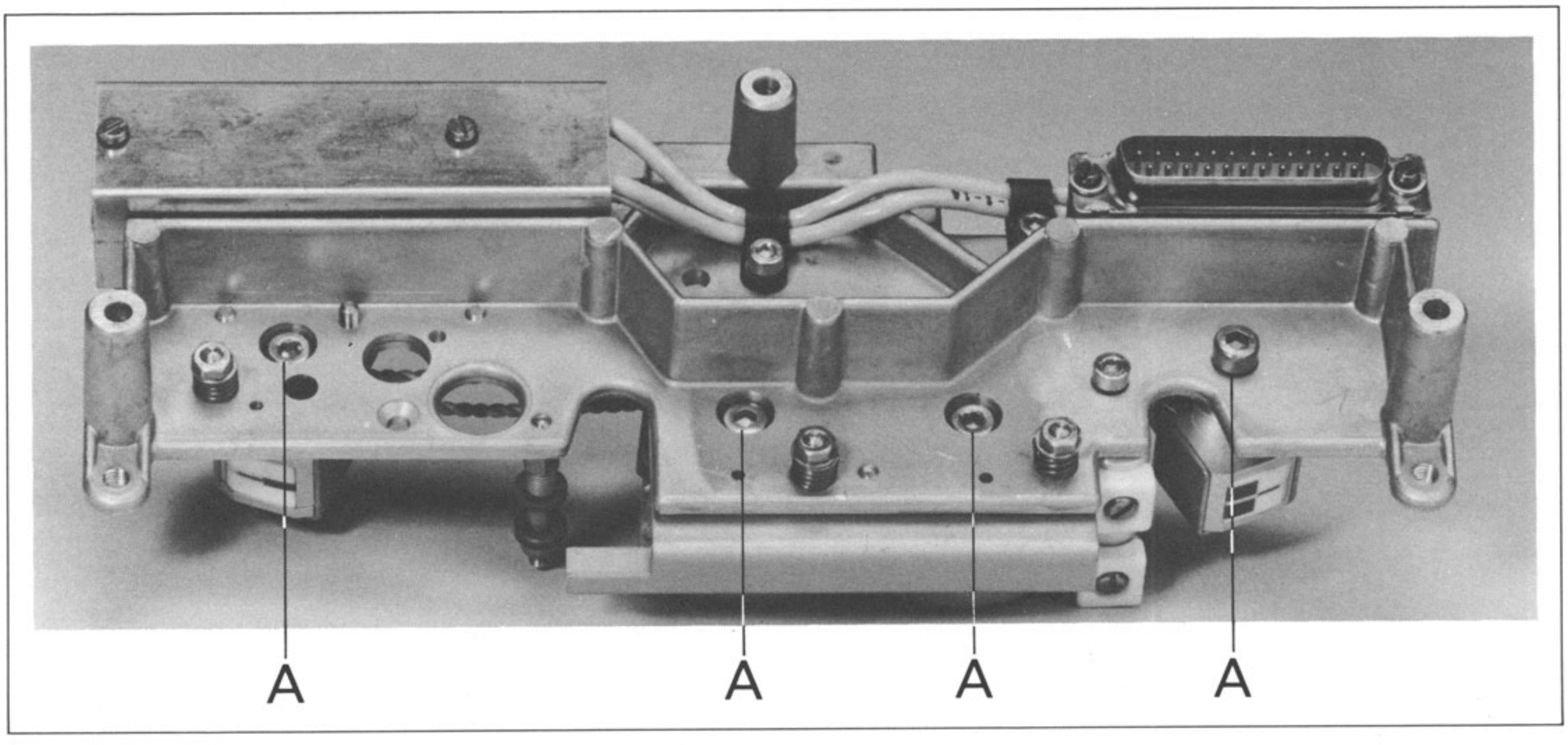

IMPORTANT

Do not shift the black azimuth alignment plate when replacing a soundhead. The distance between the head support and the head face is milled to the exact same dimensions. Adjustment of the head azimuth should, therefore, be unnecessary.

After the soundhead has been replaced, check with the tape path alignment gauge (part No. 10.010.001.17) that the head face is perpendicular and that the azimuth is correct.

For this check, the headblock and the gauge should be placed on a leveling block or in an emergency on a flat glass plate.

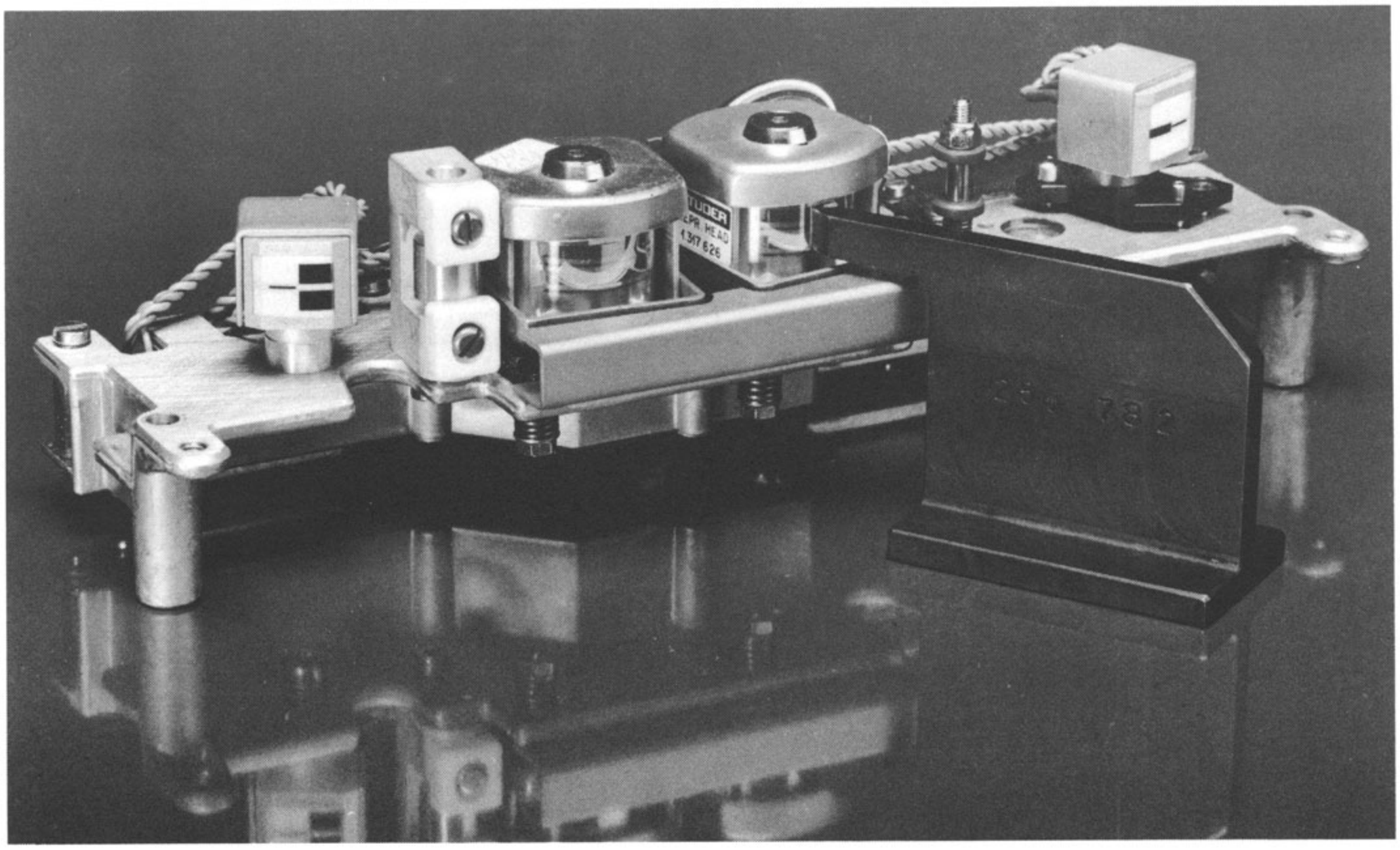

The azimuth alignment is described in Section 4.2.

Tape guidance

Check tape guidance (B) with gauge (part No. 10.010.001.17). The height can be adjusted with a screwdriver for slotted-head screws.

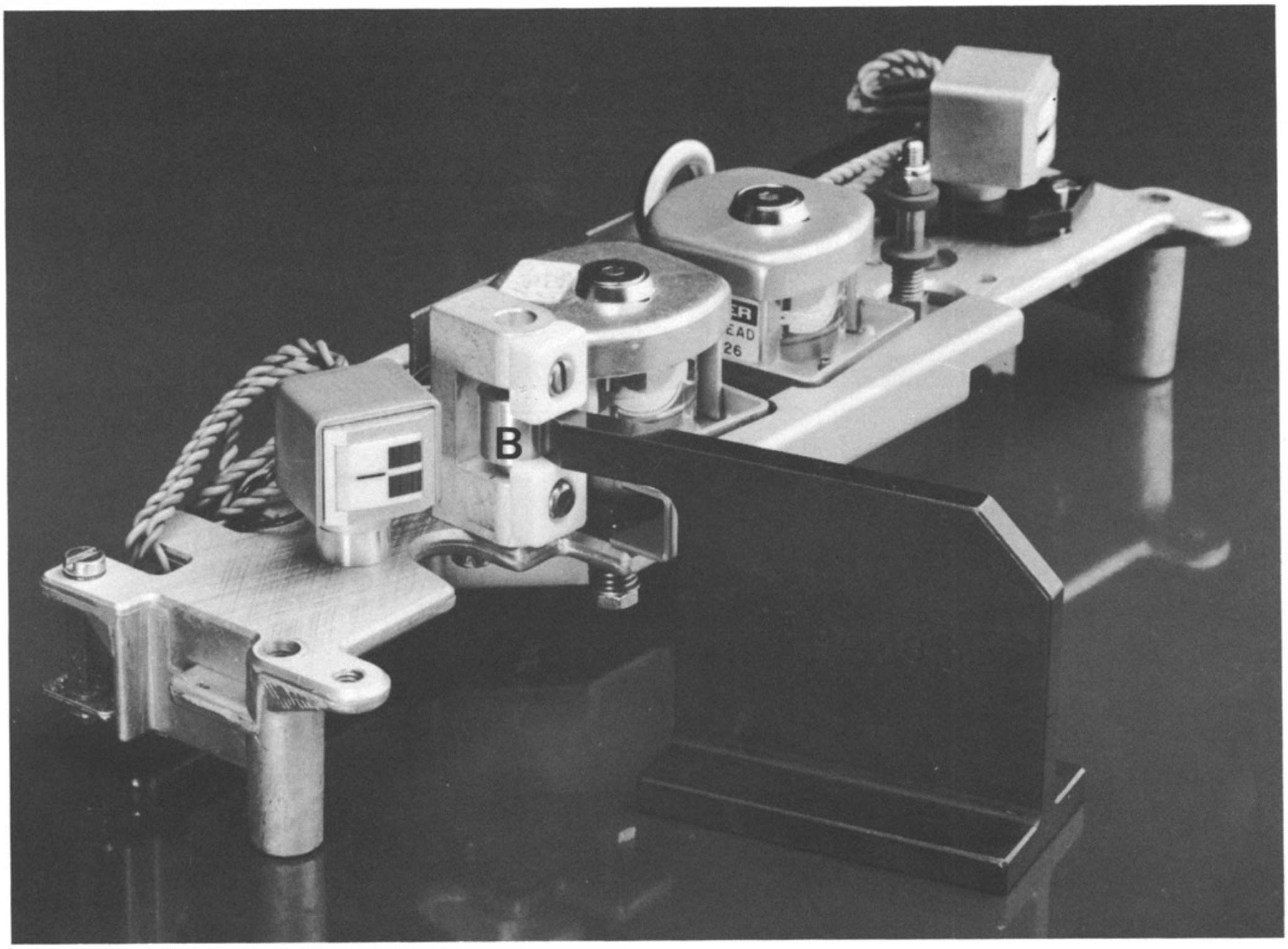

Anti-scrape flutter roller

The anti-scrape flutter roller can be removed after unfastening the 3 mm hexagon-socket-head cap screw accessible from below.

It is not necessary to check the height of the anti-scrape flutter roller after the roller has been replaced because this adjustment was made by the factory.

The mounting support for the anti-scrape flutter roller must be positioned parallel to the record head, otherwise insufficient space remains for the left-hand tape lift pin.

Check with the tape path alignment gauge (part No. 10.010.001.16) that the anti-scrape flutter roller is perpendicular on all sides.

3.4 ELECTRICAL ADJUSTMENTS

3.4.1 Checking the supply voltages

Remove upper rear panel (3.2.1). Four test points are marked on the basis board: +24 V, +15 V, -15 V, +5.6 V. The maximum deviation is ± 100 mV for each. The +5.6 V can be adjusted with the trimmer potentiometer that is accessible from the rear on the stabilizer board.

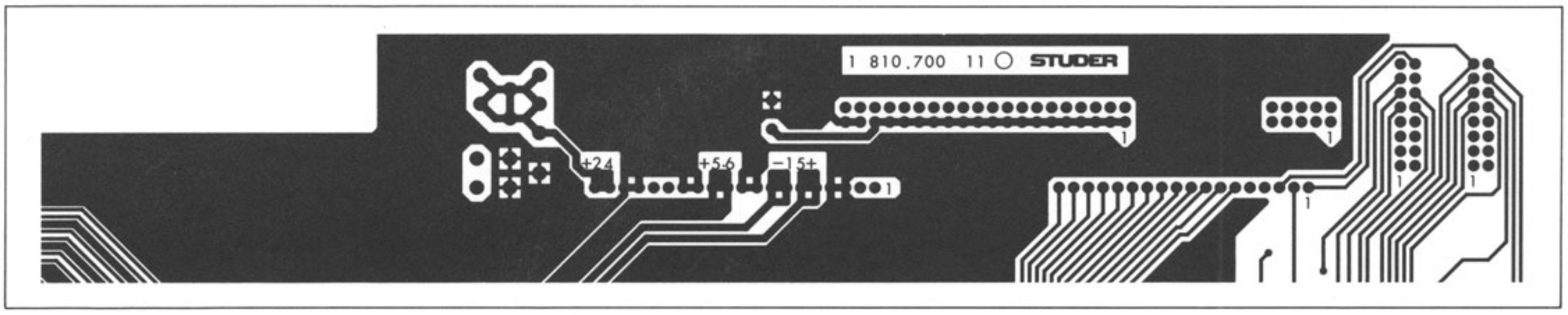

3.4.2 Tape tension sensors

Do not make any electrical adjustments to the tape tension sensors unless the basic mechanical adjustments according to Section 3.3. have been performed.

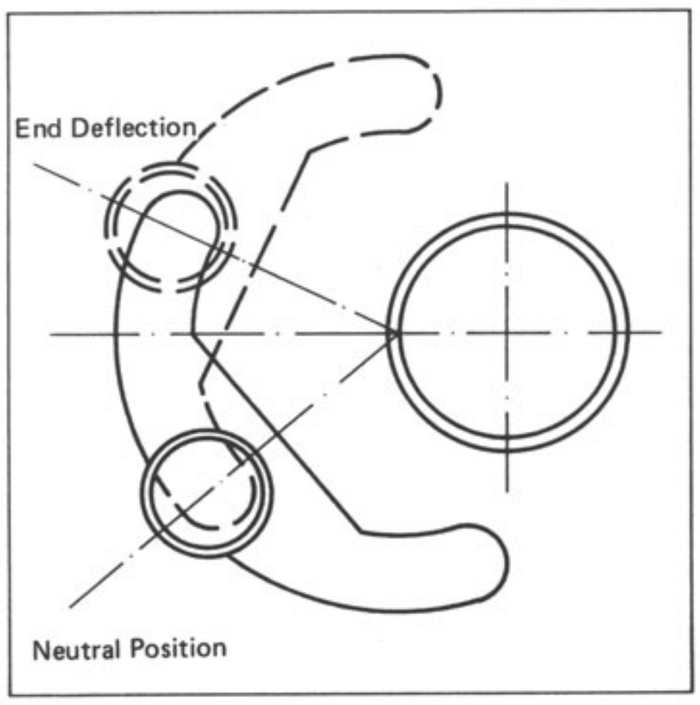

Neutral position:

With the tape tension sensors in their neutral position, adjust the signals AN-TTL or AN-TTR (each on TP1 of the corresponding tape tension sensor) with R5 or R21 respectively to

0 V ± 50 mV

End deflection:

With .the tape tension sensors at max. deflection, adjust the signals AN-TTL or AN-TTR (each on TP1 of the corresponding tape tension sensor) with R14 or R16 respectively to

4 V ±50 mV

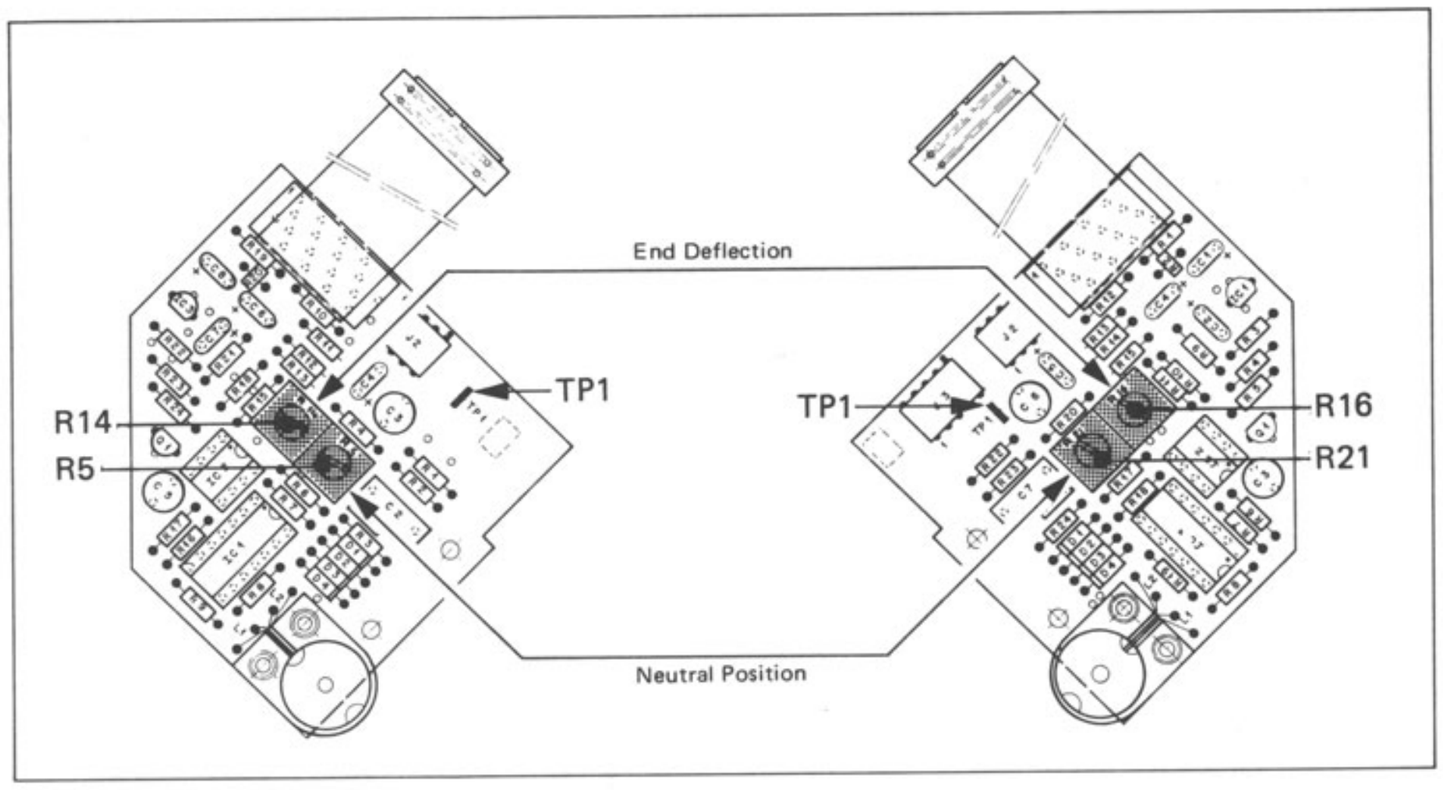

Neutral position:

Check, and readjust if necessary; AN-TTL/R = 0 V ±50 mV.

Max. deflection:

Check, and readjust if necessary; AN-TTL/R = 4 V ±50 mV.

Secure the setting of the trimmer potentiometers with a dab of locking paint (diam. 2 mm) after the adjustments have been made.

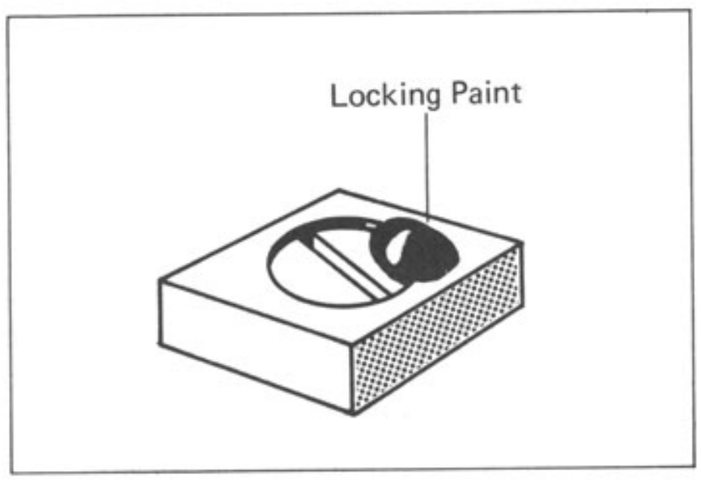

CAUTION:

Leave slots of trimmer potentiometers open.

3.4.3
Tape move sensor

Checking the TTL signals.

	CLOCKWISE	COUNTER–CLOCKWISE	TAPE DECK CONTROLLER
T - CLK 1	1 / Ø		PIN 1
T - CLK 2	1 / Ø		PIN 2

10 pulses per revolution.

Checking the tape timer:

The tape timer should count correctly forward or backward during all tape transport functions.

Manually keep the right-hand guide roller (tape move sensor) from turning in play mode. The tape timer should not advance and the recorder should switch to stop mode.

3.4.4
Tape-end sensor

Switch recorder on, tape transport in stop mode.
Both tape tension sensors in their neutral position. The EDIT solenoid of the brake chassis should drop out and the status lamp of the STOP key should flash.

Move left-hand tape tension sensor out of is neutral position. The EDIT solenoid of the brake chassis should pick up, the tape tension sensors should engage, and the STOP lamp should light up continuously. Restore the tape tension sensor to the neutral position and perform the same check with the right-hand tape tension sensor.

3.4.5
Tape tension adjustments

PLAY tension

Mount the alignment gauges on the two tape tension sensors and mount a tape (hub diameter 100 mm). Spool forward to the middle of the tape, select PLAY, and adjust the two trimmer potentiometers "PLAY" of the TAPE DECK CONTROLLER so that the two tape tension sensors are deflected to -10 degrees.

These adjustments can also be performed with the aid of a ruler by positioning the machine horizontally and opening the panel flap; the ruler can be inserted below the panel flap. The distance between the bottom edge of the guide roller and the bottom cover edge of the left-hand tape tension sensor should be 50 mm; on the right-hand tape tension sensor the distance between the bottom edge of the guide roller and the top edge of the splicing block should be 22 mm.

Back tension

Press fast forward key > and adjust the left-hand tape tension sensor to -10 degrees with the trimmer potentiometer "FORWARD" of the TAPE DECK CONTROLLER, or with ruler, analogously to the adjustment of the PLAY tension.

Press rewind key < and adjust the right-hand tape tension sensor to -10 degrees with the trimmer potentiometer "REWIND" of the TAPE DECK CONTROLLER or measure with ruler analogously to the adjustment of the PLAY tensions.

Peak tape tension

Rewind to beginning of tape (hub diameter on take-up side 100 mm). Manually keep the supply reel from turning and press fast forward key >. With potentiometer "TAKE UP PEAK" of the TAPE DECK CONTROLLER adjust the right-hand tape tension sensor to +20 degrees; or with ruler, analogously to the adjustment of the PLAY tension, distance = 42 mm.

Spool forward to end of tape (hub diameter on supply side 100 mm). Manually keep the take-up reel from turning and press rewind key <. With potentiometer "SUPPLY PEAK" of the TAPE DECK CONTROLLER adjust the left-hand tape tension sensor to +20 degrees; or with ruler, analogously to the adjustment of the PLAY tape tension, distance = 70 mm.

Final check

Check PLAY tape tension by means of a Tentelometer. Insert Tentelometer between supply reel and left-hand guide roller, or right-hand guide roller and take-up reel, respectively.
Tape tension should be 0.6 - 0.7 N (60 - 70 p) on left-hand side, 0.8 - 0.9 N (80 - 90 p) on right-hand side (respect deflection of tape tension sensors at -10°!).
If these values are not attained, realign tape tension spring with turnbuckle (A), Section 3.3.4, page 3/31.

Note: The difference between left and right tape tension should be 0.2 N (20 p).

After these adjustments, tighten the adjustment screw of the turnbuckle and secure it with locking paint.

3.4.6
Capstan motor control

CAUTION

Ensure that proper electrical insulation and excellent thermal contact with the heatsink bracket is achieved when replacing the power transistors (Q1, Q2). Mica washers coated on both sides with heat-conduction paste are, therefore, essential! After installation check insulation with continuity tester or ohmmeter!

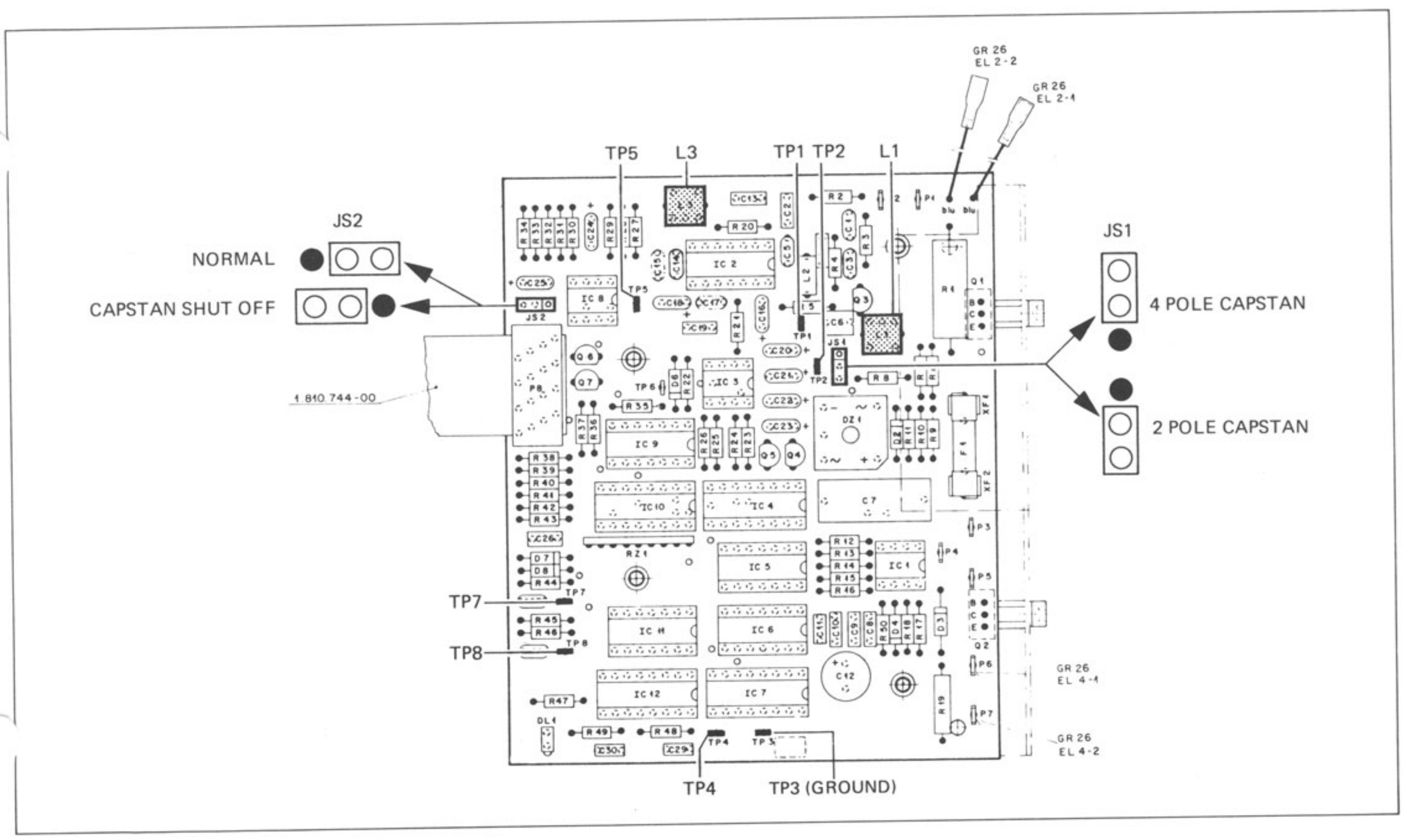

The capstan motor control requires realignment after the capstan motor or the capstan motor control has been replaced.

Completely remove capstan motor together with capstan motor control (3.2.9), do not disconnect connectors (flat cable, 2 blue stranded wires to the power transformer).

Adjustments

- Position jumper JS2 on capstan motor control so that the capstan motor switches off for TAPE OUT (CAPSTAN SHUT OFF).
- Bring both tape tension sensors into their neutral position.
- Switch recorder on, capstan motor should not rotate.
- Connect oscilloscope to TP1 of the capstan motor control, adjust signal with L1 to approx. 5.5 MHz ± 500 kHz. The signal should not disappear when touching the insulation of the two twisted stranded wires that lead to the capacitative sensor.
- Move tape tension sensors out of their neutral position (or change the setting of jumper JS2 if this is preferred) so that the capstan motor rotates (capstan lock indicator on MASTER PANEL and LED DL1 on the capstan motor control board turn on as soon as the motor has reached nominal speed).
- Connect oscilloscope to TP5. Adjust audio signal (1600 Hz at 38 cm/s) with L3 for maximum amplitude (400 mV p/p ±200 mV p/p).

Check measurements

- TP7: square-wave signal, same frequency as signal on TP5, cyclic duty factor approx. 50%.
- TP8: reference signal from microprocessor; short positive pulses. Only available when motor is running!
- TP4: output signal of phase comparator; cyclic duty factor approx. 50% when motor is running without load, i.e. pressure roller not engaged. If capstan motor too fast: LOW, if too slow: HIGH.
- TP2: DC signal, average of signal on TP4. Approx. 7...8 VDC when motor operates without load.

Exchanging the capstan motor or the capstan motor control

- The capstan motor control 1.810.761 is designed for operation with an integral capacitative sensor, the control 1.810.766 for operation with a split capacitative sensor.

  If a capstan motor with integral sensor is replaced by one with a split sensor, the control board 1.810.761 should be replaced by a control board 1.810.766. It is not recommended to operate the motor with split sensor in conjunction with board 1.810.761, although this is not impossible (capstan lock problems can occur when the motor runs without load, i.e. pressure roller not engaged).
  Both terminals of the capacitative sensor must be connected to P1 of the capstan motor PCB, and P2 to the chassis ground.
  It is not possible to operate the capstan motor with integral sensor in conjunction with the capstan motor control 1.810.766.
- If a 4-pole motor is replaced by a 2-pole motor, change the setting of jumper JS1 on the capstan motor control. Unplug the power transformer leads (2 × blu) from terminals 10 and 19 and connect them to terminals 12 and 17, and interconnect power transformer terminals 10 and 11 as well as 18 and 19.

  An additional screening plate 1.810.001.05 as well as 4 screws 21.53.0354 and lockwashers 24.16.1030 are required because the 2-pole motor has a stronger stray field. This screening plate is installed between the capstan motor and the amplifier cage and must be secured to the existing 4 hexagon bolts.

Centering the capacitative sensor

Remove the capacitative sensor but leave the capstan motor connected to the machine for adjusting the capacitative sensor. The ring sensor can be adjusted with the two screws (B) after the four screws (A) have been lightly loosened. Connect oscilloscope to TP5 of the capstan motor control and adjust to minimum amplitude modulation (in practical terms: definition of the curve minima and maxima as sharp as possible).

Subsequently retighten the four screws (A) and secure all 6 screws with a dab of locking paint (ensure that no paint flows into the hexagon socket head!).

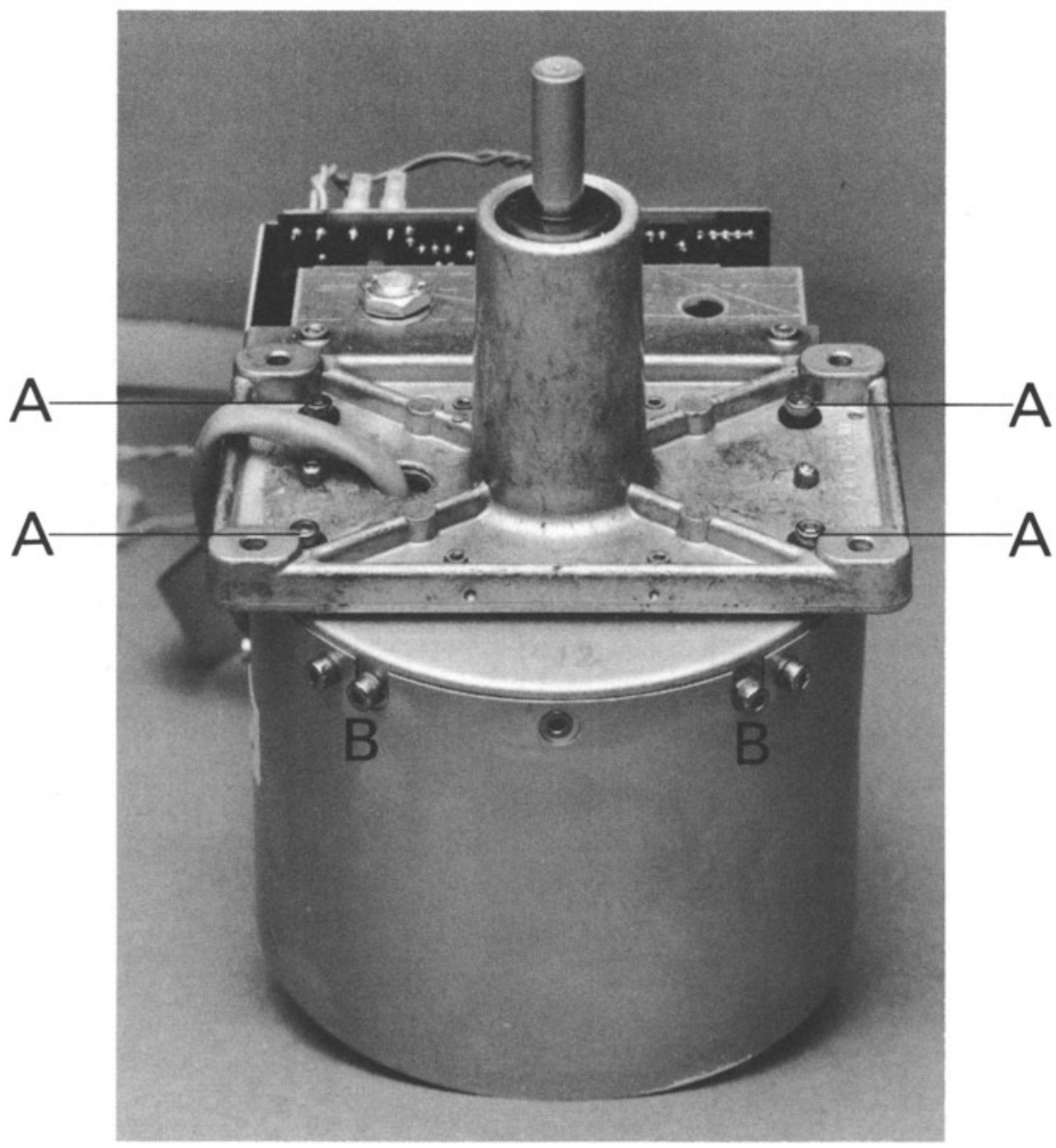

3.4.7
Spooling motor control

- Switch recorder off.
- Remove spooling motor control (3.2.8) and unscrew shock protection.
- Disconnect the two twisted stranded wires (0 V, blk; 130 V, red) on the power transformer terminals.
- Do not disconnect the leads of the spooling motors (P1...P4)! When the spooling motor control operates without load, C27 and L1 or C28 and L2 are resonant circuits through which high currents may flow!

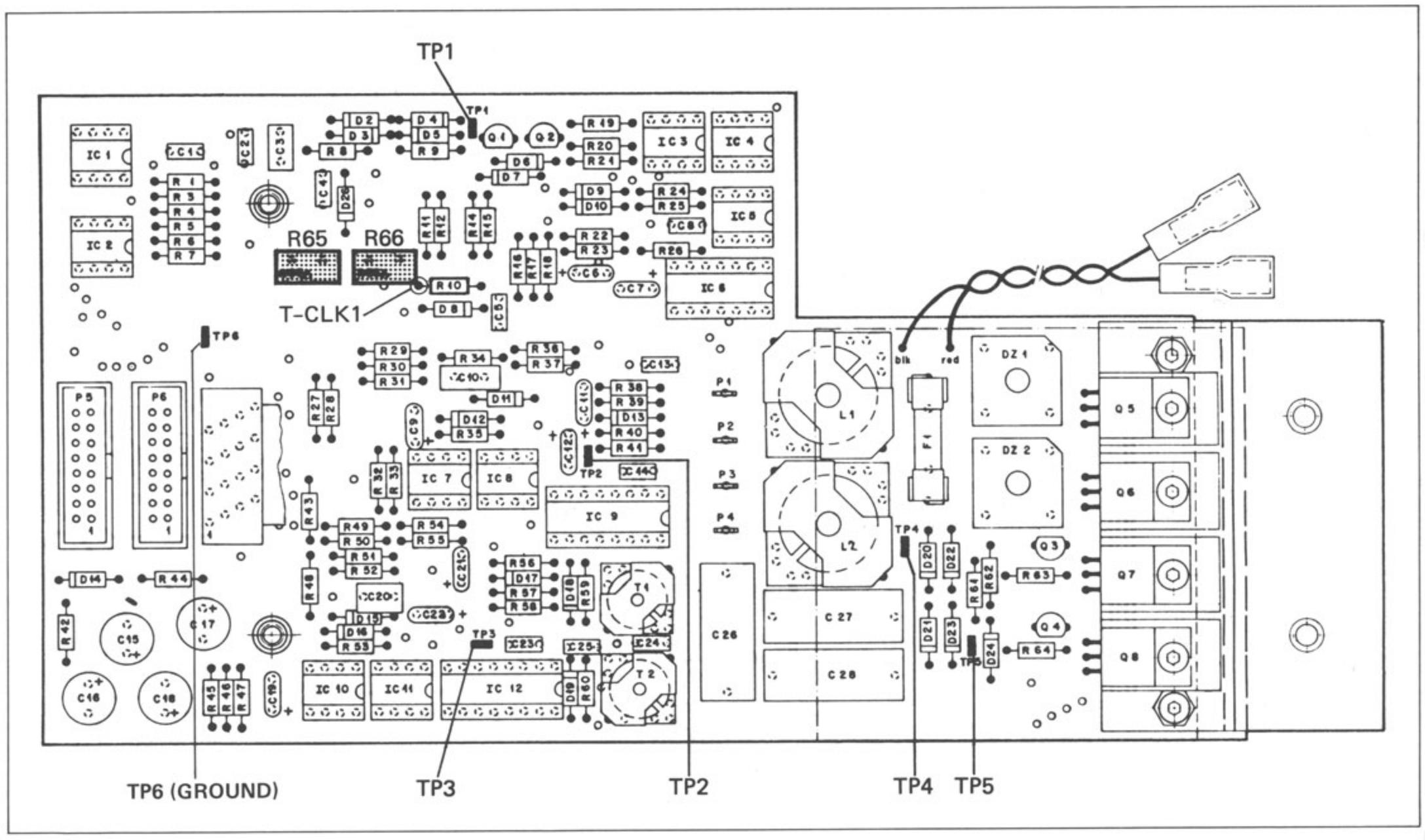

- Switch recorder on, connect oscilloscope to TP1. Balanced delta signal, 76 kHz, 10 V p/p. The DC component on TP1 should not exceed ±150 mV.
- Switch recorder off, pull IC10 out of its base; interconnect terminals 7 and 8 on the base of IC10 with a piece of wire. Switch recorder on, connect oscilloscope to TP3, and measure cyclic duty factor of the square-wave voltage. Adjust to 95% with R65. Switch recorder off, reinsert IC10 into its socket.
- Perform the same measurements analogously with IC7 and TP2. If the cyclic duty factor on TP2 is greater than 95%, decrease it to 95% with R65.
- Switch recorder off. Reconnect power transformer leads (blk terminal 14, red terminal 15). Replace fuse by a power resistor 100 ohm, > 10 W. Remove jumper JS3 on TAPE DECK CONTROLLER. Mount tape, switch recorder on and select PLAY mode.

CAUTION! Dangerous voltages are present on the spooling motor control board!

- Connect oscilloscope to TP4. A switched signal is measured that has a sinusoidal envelope curve. If the signal is unbalanced or if it has a DC component, this is caused by a defective commutating circuit (around Q3, 4, 7, 8).

CAUTION! If the measurements are made in the commutating circuit, replace fuse F1 by a series resistor (100 ohm) in order to prevent damage to the circuit!

- Connect oscilloscope to TP5 and perform the same measurements as above.
- After correct functioning has been ascertained, repeat the above 2 measurements without the series resistor (fuse F1 reinserted).
- Connect frequency counter to the terminal of R10 that is located nearer to the trimmer potentiometer R66 (signal T-CLK1). Select slowest spooling speed (STOP, TRANS <REDUCED> and < or >). Adjust frequency with R66 to approx. 85 Hz (or any other value if desired).
- Check with the other spooling speeds: STOP, < or >, TRANS <REDUCED> and < or >; frequency approx. 440...470 Hz. Press < or >; frequency approx. 190...210 Hz.
- Reinsert jumper JS3 on TAPE DECK CONTROLLER.

3.5 CIRCUIT DESCRIPTIONS

3.5.1 Power supply

Line voltages:

100, 120, 140, 200, 220, 240 V ±10%, 50...60 Hz

Internal supply voltages

+5.6; +15; -15; +24 V; all stabilized
125 VAC for spooling motor control
130 VAC for capstan motor control

The line voltage is taken from the 3-pin power inlet (GR 01) through the 2-pole power switch (GR 02), the line filter (GR 03), the line voltage selector with the primary fuse (GR 04) to the power transformer (GR 05).

The secondary side of the power transformer supplies the following voltages: 25.6 V; 35.2 V; 130 V; 125 V; 10 V (spare).

The 25.6 V and the 35.2 V are rectified and smoothed (GR 06) and produce the stabilized voltages +5.6 V, +24 V and ±15 V on the stabilizer circuit board (GR 07).

3.5.2 Stabilizer GR 07

+ 5.6 V Stabilizer

The supply voltage for the microprocessor is generated by a switching regulator with pulse width modulation. The controlling element is IC6 (regulating pulse width modulator) with built-in reference voltage source, oscillator, error amplifier, and current limiting circuit. The output of IC6 controls the two power transistors Q4 and Q3. The circuit elements Q6, 9, 10, 12, and 13 switch the regulator off as soon as the input voltage drops below approx. 8 V in order to prevent destruction of the series transistor Q4 because of instabilities. The output voltage can be adjusted to 5.6 V with R69.

Triac Q11 short-circuits the output (current limiter response of the regulator; or the 25.6 V fuse blows if the former is defective), if the output voltage exceeds 7 V because of a malfunction.

The output current is limited to approx. 7 A. R58 is the current measuring resistor.

24 V Stabilizer

The +24 V are created from the rectified 25.6 VAC by IC3 which is a voltage regulator with a fixed setting.

+/-15 V Stabilizer

Voltage regulators IC1, IC2 which have a fixed setting produce the +/-15 V from the rectified 35.2 VAC. The output currents of both regulators are identical.

In the event of defects which would cause a rise in the output voltage, TRIAC Q5 short circuits the output (current limiter response of the regulators; or the 35.2 VAC fuse blows if the latter are defective).

Monitoring the supply voltages

The circuit with IC4 monitors the availability of the stabilized supply voltages. If one of the voltages fails or drops below approx. 70% of the nominal value, the signal T-SUPVON becomes 0. This sets up an interrupt in the microprocessor and tape braking is activated immediately. At the time the recorder is switched on, the signal T-SUPVON must be 1 before the microprocessor enables the functions of the tape recorder.

Monitoring the line voltage

Line voltage failures of less than 80 ms do not influence the logic states of the recorder. Correct switching to STOP mode is ensured for longer failures.

A pulsating DC voltage is tapped on the 25.6 V rectifier (ACB-25.6 and STABIN-6). C12 in the circuit with IC5 is charged by R34, R27 and periodically discharged by the pulsating DC voltage. As soon as a half-wave is missing (10 ms at 50 Hz, 8.33 ms at 60 Hz), the signal T-PWRON becomes 0 and sets up an interrupt in the microprocessor and tape braking is automatically initiated after 80 ms.

3.5.3
MP UNIT GR 20 EL 01

1.810.752/1.820.780 [specifications that differ for 1.820.780 are indicated in brackets]

The MPU logic converts the input commands into logical control signals and stores the audio parameters, locate addresses, and the last operating state when the tape recorder is switched off. The operating hours meter can be read out which accumulates the operating time of the tape transport.

The clock frequency of the microprocessor is also the central timing source for the recorder:
Capstan motor control, switched spooling motor output stage, audio, time code.

Bus and select lines lead to:

- Tape deck controller
- Audio controller
- Command unit
- Serial remote controller

The TTL MPU bus features 8 data and 3 address lines as well as separate select lines to the individual controllers.

Microprocessor

The MC 6803 is a bidirectional, bus-oriented 8-bit parallel microprocessor with 16 address bits. It is implemented in NMOS technology, is TTL compatible, and requires only one supply voltage (+5 V).
Seven different addressing methods are possible and its internal command register can decode 72 commands.

The internal 128 byte RAM is not used for the present application and is ignored by the program. Up to 64 K external memory can be addressed with the 16 address bits.

In the operating mode selected (EXPANDED MULTIPLEXED MODE No. 2), PORT 3 (lines P30 ... P37) operate as a time-division address/data bus.

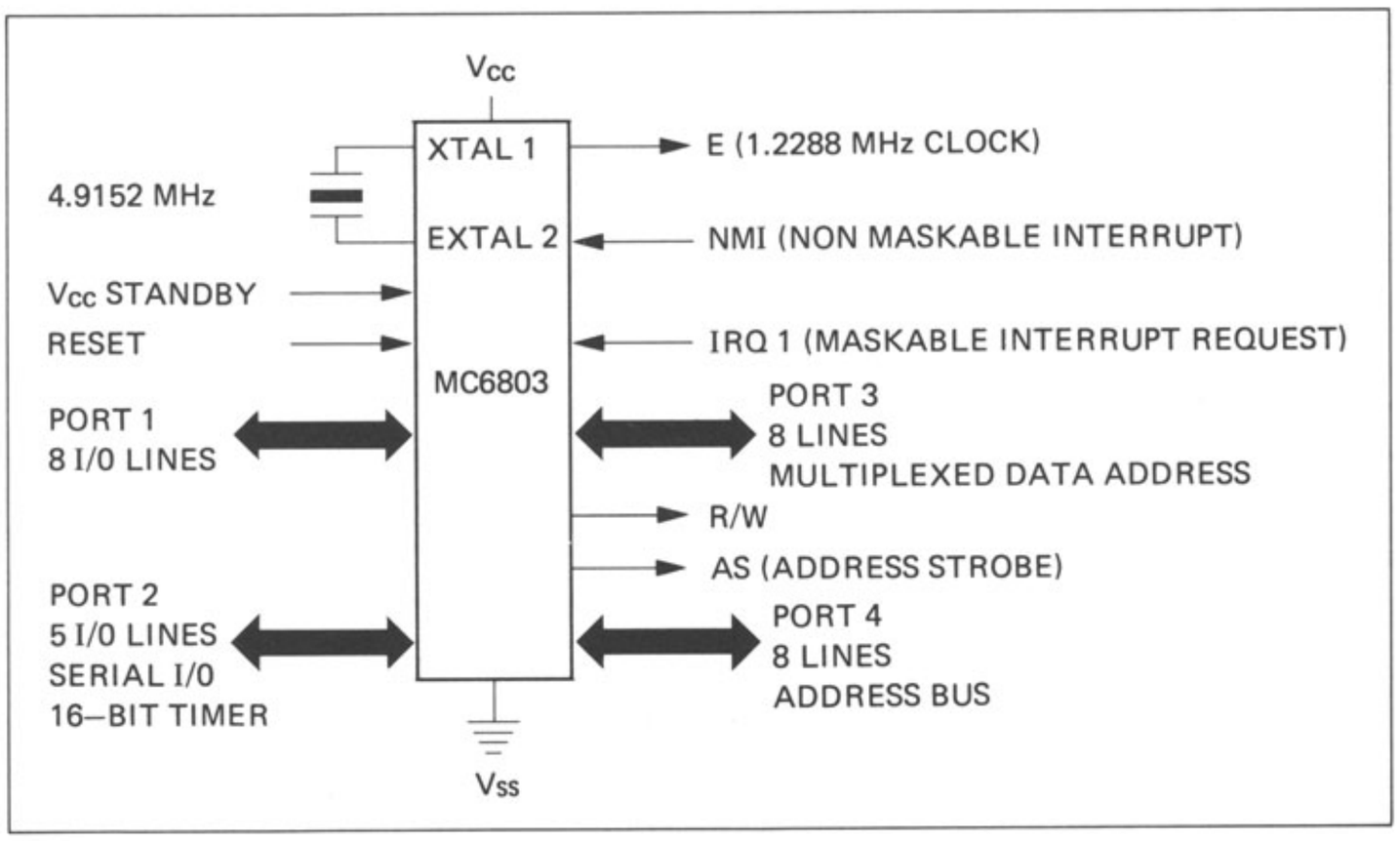

The internal clock frequency is 1.2288 MHz which is derived by dividing the 4.9152 MHz quartz frequency by 4.

External memories

The external memories comprise 16K PROM (IC3 ... IC6) and 2K RAM (IC2) [24K PROM (IC8, IC10, IC12, IC14) and 2K RAM (IC6)] as well as a rechargeable buffer battery BA1. The battery is charged by the +5.6 supply voltage and feeds the RAM when the recorder is switched off.

The complete machine program is stored in PROM. The RAM stores the audio data, the tape timer information, the selected command, the locate addresses, and the tape transport status. The R/W signal (READ/WRITE) determines whether data is sent from the microprocessor to the RAM (WRITE) or is received from the RAM (READ).

IC14 [IC11] (OCTAL TRANSPARENT LATCH WITH 3-STATE OUTPUTS) is the address interface for PORT 3 (Address bits 0 ... 7) and is controlled by AS (ADDRESS STROBE).

When E = 0 and AS = 1, PORT 3 is an address bus; with E = 1 and AS = 0 it is a data bus.

In contrast to address bits 0 ... 11 which are primarily used for addressing the memories and for the address bus of the tape recorder, address bits 12 ... 14 in IC10 (1-OF-8 DECODER/DEMULTIPLEXER) [address bits 12 ... 15 in IC9 (1-OF-16 DECODER/DEMULTIPLEXER)] generate the information for the select lines of the PROMs and the controllers.

IC1 [IC3] (OCTAL BUS TRANSCEIVER WITH 3-STATE OUTPUTS) establishes the connection to the 8-bit MPU data bus. IC7 [IC2] (OCTAL BUFFER/LINE DRIVER) places the address and select bits on the MPU address/select bus. IC1 [IC3] is controlled by R/W, address bits 11, 14, 15 and the MPU clock [R/W, address bits 14, 15 and the MPU clock]. IC 7 is controlled by address bits 11, 14, 15 [IC2 by address bits 14, 15].

The clock frequency of 1.2288 MHz is divided down in IC13 [IC5] (DUAL DECADE COUNTER) to the following frequencies:

:4 = 307.2 kHz (reference frequency for RF driver, erase and bias frequency)
:16 = 76.8 kHz (clock frequency for spooling motor output stage)
:128 = 9.6 kHz (reference frequency for capstan motor control)

RESET

The RESET input fulfils two functions:

- Clean initialization during power-on of the microprocessor; the RESET input must be kept below 0.8 V until the supply voltage V/CC has reached at least 4.75 V so that the internal clock generator (Clock) can stabilize during this time.

- If the microprocessor does not function correctly, reinitialization is performed either with switch S1 or automatically, and the program is restarted.

  An automatic RESET is initiated if no tape timer scan occurs within approximately 20 ms (also refer to 3.5.4 TAPE DECK CONTROLLER).

During the power-on sequence, the RESET input must be kept low for at least 8 cycles of the internal clock frequency (min. 6.5 µs). The program counter is loaded with the last two addresses (FFFE, FFFF) during this time. The program starts with the first instruction two cycles after a positive voltage (log. "1") is available on the RESET input.

INTERRUPT

An INTERRUPT routine is initiated if a line voltage failure is detected by the power supply (T-NMI [T-PWRON] = 0). The current instruction is completed before the INTERRUPT routine starts. The momentary operating status is stored in RAM and a STOP command is output to the tape deck controller after 80 ms. If the line voltage failure is shorter than 80 ms, the INTERRUPT routine is cancelled and normal program execution continues.

Only the NMI (NON-MASKABLE INTERRUPT) rather than the T-IRQ (MASKABLE INTERRUPT REQUEST) is used.

T-TX (send line) and T-RX (receive line) lead to the serial interface.

Output P17 is connected through IC8 [IC4] in the form of the signal T-DRVENB to the serial interface which switches the latter's output on.

The new version of the MPU board 1.820.752 (in development) provides the following additional features:

- Selection of LED or LCD tape timer display (selectable with jumper on TAPE DECK CONTROLLER).
- Automatic MUTING during spooling.
- Display of recorder status on a connected computer terminal (with DST command).

3.5.4
TAPE DECK CONTROLLER GR 20 EL 02

1.810.750

Setpoint generator for spooling motor control with 2 × 3 trimmer potentiometers. Control of tape transport solenoids (brake, 3 × EDIT, pressure, and tape lift).
Reading the tape transport status.
Data for capstan motor control.
Interpretation of tape move sensor.

Spooling motor control GR 24

Analog servo loop comprising: tape tension sensors GR 27/GR 28, spooling motors GR 09/GR 10, motor control with pulse-width modulation (clock frequency supplied by MPU).

The TAPE DECK CONTROLLER supplies the following information:
Tape tension setpoint left and right (analog) for PLAY, spooling, and PEAK. Reduced spooling speed (2 bits), reproduce, spooling and stop. Transmission of information concerning tape movement and direction of travel to the MPU.

Capstan motor control GR 26

2nd order phase-locked loop (PLL), quartz reference 9.6 kHz from MPU, speed change-over through frequency division.

Capacitative tacho sensing. DC braking when switching to low speed or in varispeed mode.

4-pole capstan motor for 3.75, 7.5, 15 ips
2-pole capstan motor for (3.75), 7.5, 15, 30 ips

Tape move sensor GR 28 EL 05

The tape move sensor supplies two square-wave voltages (T-CLK1, T-CLK2) that are offset by 90°. Their frequency is proportional to the tape speed. The diameter of the guide roller has been dimensioned so (37.9 mm) that a tape speed of 3.75 ips results for a frequency of 8 Hz. The following pulse rates are thus obtained:

3.75 ips: 8 pulses/sec.
7.5 ips: 16 pulses/sec.
15 ips: 32 pulses/sec.
30 ips: 64 pulses/sec.

The signal T-CLK1 is buffered and is available as TO-CLK on pin 7 of the connector for the parallel remote control.

	CLOCKWISE	COUNTER–CLOCKWISE	TAPE DECK CONTROLLER
T-CLK 1	1 / 0		PIN 1
T-CLK 2	1 / 0		PIN 2

From the 90° offset square-wave signals of the tape move sensor, direction-dependent pulse trains are formed via IC2, IC3, IC4 which are stored in the two binary counters IC11, IC12 (max. 255 pulses). The counter outputs are connected through a buffer/driver (IC10) to the data bus. The microprocessor requests a tape timer scan in intervals of 20 ms and receives the data bits available on the data outputs of IC10.

An address decoder IC13 (1-OF-8 DECODER/DEMULTIPLEXER) decodes the address output by the microprocessor when the signal T-TDSTR (TAPE DECK CONTROLLER STROBE) is 0. The data outputs of IC10 are enabled with T-RW (PROCESSOR READ/WRITE) = 1, and the microprocessor receives the stored data.

The following logic states must exist on the address decoder so that the microprocessor can receive the content of the tape timer.:

T-TDSTR = 0
T-RW = 1
T-ADRX = 0
T-ADRY = 0
T-ADRZ = 1

TD04-R thus becomes 0 and enables the buffer/driver IC10.

Microprocessor data (commands) are transmitted with T-RW = 0.

The following logic states must exist on the address decoder so that the microprocessor can reset the binary counters:

T-TDSTR = 0
T-RW = 0
T-ADRX = 0
T-ADRY = 0
T-ADRZ = 1

TD04-W thus becomes 0 and resets the counters IC11, IC12.

IC14 (OCTAL D-TYPE FLIP-FLOP) with the address TD07-W = 0 decodes the commands that have been output by the microprocessor through the databus for the spooling motor control such as:
Play, fast forward, rewind, and stop, as well as 2 information bits for the spooling speed:

Tape speed	max.	7	4	1	m/s
T-TPSPD1	0	1	0	1	
T-TPSPD2	0	0	1	1	

Both bits are reset to 0 (10 m/s) by switching off TRANS or with STOP and PLAY.

IC9 with the address TD06-W = 0 decodes the commands output by the microprocessor for the six tape transport solenoids (control through open-collector drivers IC5 ... 8) and the information for the capstan motor control:

T-CAPON = 0 (capstan motor control on)
T-REFSEL = 0 (Capstan motor controlled by external reference frequency; 9.6 kHz corresponds to the nominal speed set with the 2 bits T-SPDSL1, 2)
T-SPDSL1, 2 determine the tape speed:

Tape speed	30	15	7.5	3.75	ips
T-SPDSL1	0	0	1	1	
T-SPDSL2	0	1	1	0	

Through the buffer/driver IC1 with the address TD05-R = 0, the following information is received by the microprocessor in addition to the tape travel direction:

T-SUPVON (Supply voltage monitoring, "1" = all on)
T-SYNCAP (capstan motor speed, "0" = synchronous running)
T-TENDL/R (limit switch of tape tension sensors, "0" = neutral position)

The multivibrator IC18 monitors the correct functioning of the microprocessor: the tape timer is scanned in intervals of approx. 20 ms with the address TD04-R = 0. The same signal is also used to trigger the monostable multivibrator IC18. If no timer scan occurs, the output 2Q of IC18 switches the signal T-RESET to "0". This causes a RESET in the microprocessor, i.e. the program is restarted.

Through the output 1Q of IC18, the RESET pulse also resets the two 8-way D-flip-flops IC9 and IC14 and the machine is switched to STOP mode.

3.5.5
BUS CONVERTER GR 20 EL 05

1.810.754

TTL/CMOS bus converter, (CMOS bus with 8 data and 4 address bits).
Interface for audio section, transmits only data from the microprocessor to the audio section ("WRITE" only).
The audio parameters output by the MPU are written into the audio amplifiers through the TTL data bus, the bus converter and the CMOS bus.

- With 8-way D-flip-flop:
  Input and output level 0, 4, 8, or 10 dBm
  Change-over INP, SYNC, REP
  Muting MUTE
  Equalization 3180 µs
  Erase current
  Drop-in or Drop-out

- With 8-bit digital/analog converter (256 step attenuator):
  Reproduce level
  Reproduce frequency response (treble, bass)
  Reproduce equalization
  Record level
  Record frequency response (treble)
  Record equalization
  Bias current

The bus converter essentially consists of the interface circuit IC5 (PERIPHERAL INTERFACE ADAPTER = PIA) and the CMOS bus drivers IC3, 6, 8.

MPU signals to the PIA:

- Data bits: T-DATA-0...T-DATA-7 (MPU bus TTL).
- T-ENB: MPU clock frequency, 1.2288 MHz.
- T-RW: the data transmitted by the MPU can be placed on the CMOS bus by the PIA when READ/WRITE = 0.
- T-RESET: all register bits of the PIA are set to 0 when this signal = 0.
- T-ACSTR (AUDIO CONTROLLER STROBE) = 0 and T-ADR-Z enable the PIA.
- T-ADR-X and T-ADR-Y address the internal registers of the PIA.

Output signals of the PIA:

- CA-DATA 0...CA-DATA 7: 8 bit CMOS data bus
- CA-ADR-R, S, T, U: 4-bit CMOS address bus
- CA-CHS01, 02, TC: channel selection 1, 2, and time code channel
- CA-MONO: mono/stereo switch ("0" = mono)

Stand-by signals (TTL) from: CH1, CH2, time code (recording) and mono-stereo switch are transmitted through IC1 (3-STATE HEX BUFFER) to the PIA and received by the microprocessor.

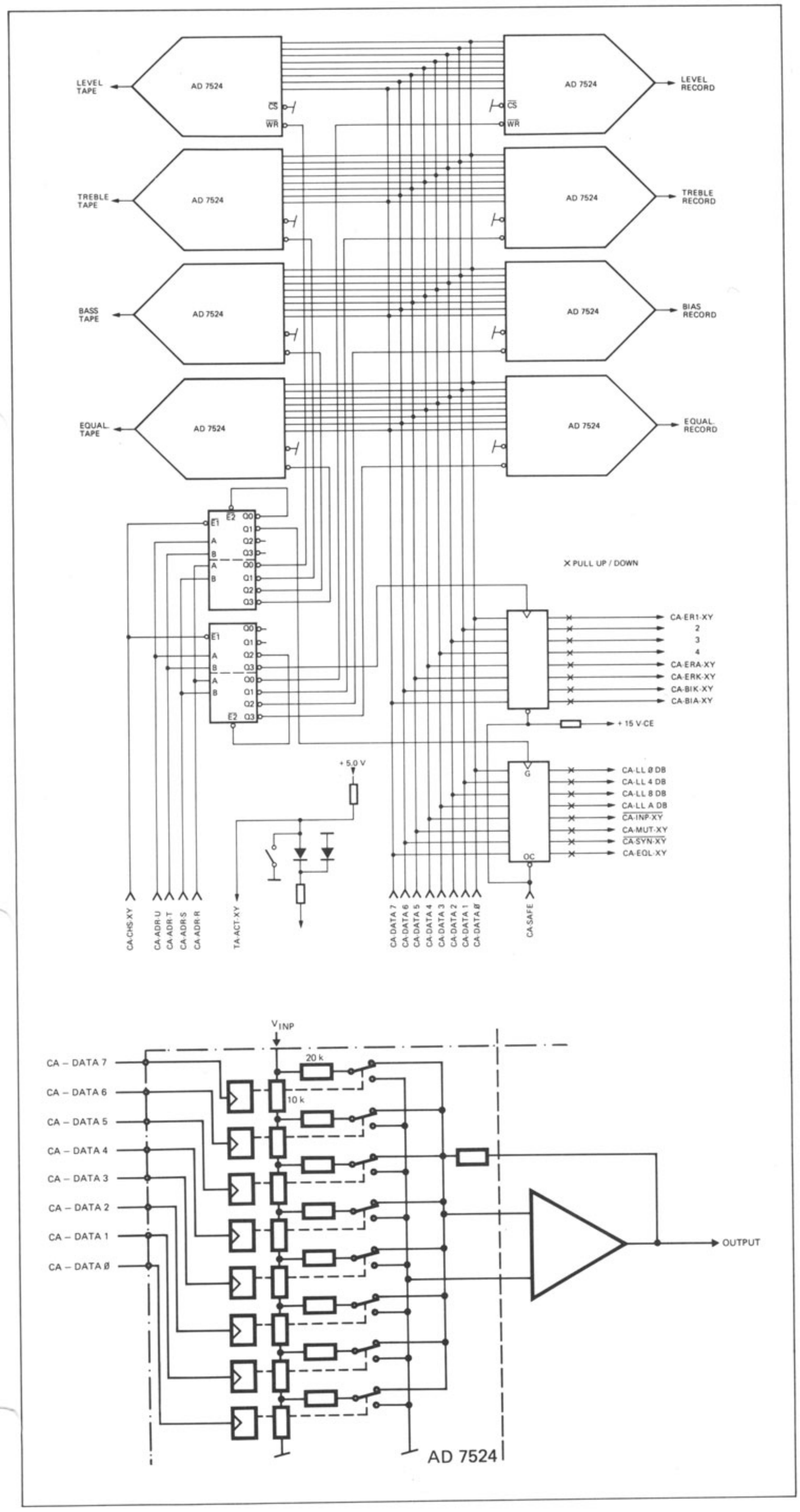
LEVEL TAPE
AD 7524
LEVEL RECORD
TREBLE TAPE
TREBLE RECORD
BASS TAPE
BIAS RECORD
EQUAL. TAPE
EQUAL. RECORD
X PULL UP / DOWN
CA-ER1-XY
2
3
4
CA-ERA-XY
CA-ERK-XY
CA-BIK-XY
CA-BIA-XY
+ 15 V-CE
+ 5,0 V
CA-LL Ø DB
CA-LL 4 DB
CA-LL 8 DB
CA-LL A DB
CA-INP-XY
CA-MUT-XY
CA-SYN-XY
CA-EQL-XY
CA-CHS-XY
CA-ADR-U
CA-ADR-T
CA-ADR-S
CA-ADR-R
TA-ACT-XY
CA-DATA 7
CA-DATA 6
CA-DATA 5
CA-DATA 4
CA-DATA 3
CA-DATA 2
CA-DATA 1
CA-DATA Ø
CA-SAFE
V_{INP}
20 k
10 k
CA – DATA 7
CA – DATA 6
CA – DATA 5
CA – DATA 4
CA – DATA 3
CA – DATA 2
CA – DATA 1
CA – DATA Ø
OUTPUT
AD 7524

3.5.6
PERIPHERY CONTROLLER GR 20 EL 04

1.810.753

The PERIPHERY CONTROLLER is the interface to the serial TTL bus (1 serial data bit per peripheral device; 3 address bits; 1 READ SELECT line, and 1 WRITE SELECT line).

Bus and address lines lead to the following units:
- Audio controller keyboard; input section for audio parameters.
- Channel control unit CH1; keys and status indicator lamps, channel 1.
- Channel control unit CH2; keys and status indicator lamps channel 2.
- Channel control unit CH3; keys and status indicator lamps time code channel.
- Master panel; keys and status indicator lamps for tape speed, mono-stereo switch (or tape bias selector), and CCIR/NAB equalization.
- Remote interface; interface to parallel remote control.

The periphery controller essentially consists of an interface circuit (PERIPHERAL INTERFACE ADAPTER = PIA).

MPU signals transmitted to the PIA:

- Data bits: T-DATA-0...T-DATA-7 (MPU bus TTL).
- T-ENB: MPU clock frequency 1.2288 MHz.
- T-RW: the data sent by the MPU can be placed on the serial TTL bus with READ/WRITE = 0; with READ/WRITE = 1 the MPU can receive data bits from the PIA.
- T-RESET: all register bits of the PIA are set to zero when this signal = 0.
- T-ACSTR (AUDIO CONTROLLER STROBE) = 0 and T-ADR-Z = 1 enable the PIA.
- T-ADR-X and T-ADR-Y address the internal registers of the PIA.

Peripheral lines of the PIA:

- Seven (+ 1 spare) serial I/O data lines (channel controls, master panel, remote interface).
- DATA ENB (OUTPUT)
- DT JMP, DT ACK1, 2; data lines of the input unit for the audio parameters (INPUT).
- A, B, C; address lines (OUTPUT)
- READ, WRITE

Input section for audio parameters (1.810.755):

The input section comprises 11 keys, 13 indicator lamps, and 8 code switches. The audio parameters are programmed with the keys, the indicator LEDs are used for status indication. The code switches fulfil the following functions:

1, 2: Selecting the erase current for full-track, 2-track and 2-track with time code.
3: Implementing the track and output selection individually for each audio channel or for both channels in parallel.
4: Spare
5, 6: Setting the line levels for inputs and outputs.
7: The same audio parameters apply to CCIR and NAB equalization if this switch is set.
8: Enables the input section.

The 11 keys are connected through IC3, 4 (8-INPUT MULTIPLEXER WITH 3-STATE OUTPUT) to the serial TTL bus.
Example: Input D4 (IC4, PIN 5) = 0 when the STORE key is pressed. The address bits must be A = 0, B = 0, C = 1, and READ = 0 in order to transfer this information on the line DT ACK1. The latter becomes 0 and IC4 is enabled.
T-RW must also be 1 so that the microprocessor can receive this information from the PIA.

The status indicator lamps are controlled by IC7, 8 (ADDRESSABLE PERIPHERAL DRIVER). To acknowledge e.g. the STORE command, T-RW must be 0 (PIA transmits data output by the MPU); DT ACK1 must be 1 on the data input D (IC8, PIN 13).
The STORE pilot lamp is switched on with WRITE = 0 and the address bits A = 0, B = 1, C = 0. IC7, IC8 feature open-collector Darlington outputs.
If WRITE = 1, the output states of IC7, IC8 remain stored. The status indicator lamp is switched off with the address A = 0, B = 1, C = 0 and WRITE = 0 as well as DT ACK1 = 0.

The code switches are connected through IC5 (8-INPUT MULTIPLEXER WITH 3-STATE OUTPUT) to the serial TTL bus.

Example: S8 must be switched on for programming the audio parameters (S-ACKBENA = 0). To enable transfer of this information to the line DT JMP, the address bits must be A = 1, B = 1, C = 1, and READ = 0, resulting in DT JMP = 0.

Audio command bus:
The peripheral device lines of the PIA are connected through IC2 (OCTAL BUS TRANSCEIVER) to the bidirectional audio databus. The address lines are connected through IC1 (OCTAL BUFFER/LINE DRIVER WITH 3-STATE OUTPUT) to the audio address bus.

The MPU receives the information of the track mode selectors (SAFE/READY), the SAFE/READY switch of the time code channel, the output selectors (INP, SYNC, REC), as well as the switches of the master panel through the audio command bus, the PIA, and the MPU-TTL bus.
The switches are connected through multiplexers (8-INPUT MULTIPLEXER WITH 3-STATE OUTPUT) to the corresponding bus lines.
The MPU sends the commands for the status indicator lamps through the MPU TTL bus, the PIAs, and the audio command bus to the lamp drivers (ADDRESSABLE PERIPHEAL DRIVER).

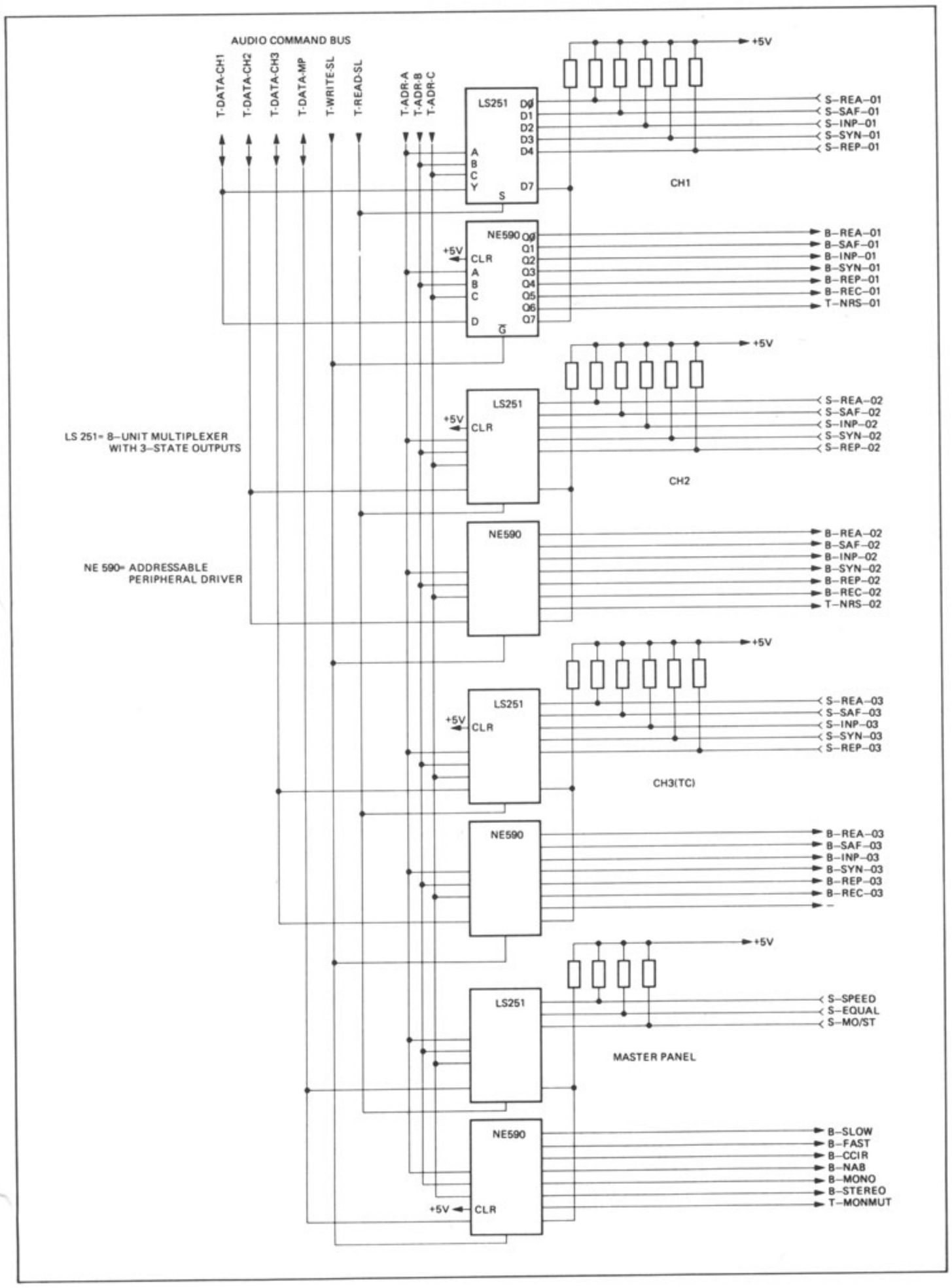

Remote interface GR 23 (1.810.738):
The interface of the parallel remote control is connected through the audio command bus to the PIA of the periphery controller. The corresponding data lines are T-DT-RP1, 2. The data line D-DT-SJMP is connected to IC9 (8-INPUT MULTIPLEXER WITH 3-STATE OUTPUT). The inputs of IC9 are programmed through S-JMP 1...8. They transmit the address (S-JMP 1...6) that is required when several tape recorders operate on a serial bus; the other two inputs 7 and 8 determine the baud rate for the data transmission (300, 1200, or 9600). The address board is plugged into J2 of the remote interface from the rear of the recorder.

The remote control keys are connected through IC8 (8-INPUT MULTIPLEXER WITH 3-STATE OUTPUT) to the data bus T-DT-RP1. When the PLAY remote control key is pressed, for example, input D2 = 0. With the address T-ADR-A, B, C = 0, 1, 0 and T-READ-SL = 0, the output of T-DT-RP1 = 0.

The status indicator lamps are switched on by T-DT-RP1 and IC5 (8-BIT ADDRESSABLE LATCH). When the PLAY command has been accepted, the data bit T-DT-RP1 = 1 is transmitted with the address T-ADR-A, B, C, = 0, 1, 0 and T-WRITE-SL = 0. The output Q2 of IC5 thus changes to 1 and switches on the PLAY status lamp through the open-collector driver IC2.
The lamp remains on until the data bit T-DT-RP1 = 0 with the address T-ADR-A, B, C = 0, 1, 0 is transmitted through the PIA, and T-WRITE-SL = 0.

The signals SR-VARSPD (varispeed on) and SR-TRANS, and SR-REM-DIS (disable remote control) are connected to the data line T-DT-RP2.
SR-REM-DIS is not wired on the 25-pole REMOTE CONTROL connector.

The fader start is connected through a rectifier bridge with D1...4 to the optocoupler IC1. The output transistor of IC1 controls input D6 of IC8. The fader start circuit can be powered either externally from the mixing console or by the internal supply of the tape recorder (+24 V on connector pin 25).

3.5.7
COMMAND UNIT GR 21

1.810.300/1.810.303

12 (Hall) keys and display (1.810.300: 4 1/2 position LCD; 1.810.303: 5-position LED) with leading negative sign. Status indicator lamps for all keys (except RESET TIMER and ZERO-LOC).

Twenty code switches are located on the underside of the command unit:

- Standard selection for time code (film, TV Europe, TV USA black/white, TV USA color NTSC)
- Code track type STUDER or PILOT (1.2" offset)
- LIFTER (momentary or flip-flop button)
- Drop-in sequence
- Drop-out sequence
- Tape type "A" or "B" for slow speed
- Tape type "A" or "B" for high speed
- Mono-stereo selection or tape bias selection
- Selection of tape speeds (2 with push buttons on LS version, 4 with rotary switch on HS version)
- Drop in directly with REC from PLAY
- Reprogramming of LOC 2, LOC 3, and LOC 4 buttons

Also refer to Section 4.2.9.

The command unit is connected to the microprocessor through the MPU bus.
The 12 keys and the 20 code switches are arranged in four groups. Each group is connected to the data bus by a buffer/driver IC2, 3, 6, 7 (OCTAL BUFFER/LINE DRIVER WITH 3-STATE OUTPUTS).
Two 8-bit registers IC 4, 5 turn on the 10 status indicator lamps (LED) through driver stages.

If signal T-CUSTR (COMMAND UNIT STROBE) = 0, the address decoder IC1 (1-OF-8 DECODER/DEMULTIPLEXER) decodes the address sent by the microprocessor through the address bus (in intervals of approx. 20 ms). Data can be received from the microprocessor with T-RW (PROCESSOR'S READ/WRITE) = 1, and the data output by the MPU (status indicator lamps, display) are processed with T-RW = 0.

Example of a command transmission:
T-RW = 1; address bits T-ADR-X, Y, Z are 1, 0, 1. T-SL5 is, therefore 0 and enables IC2 (OCTAL BUFFER LINE/DRIVER WITH 3-STATE OUTPUTS). If the PLAY key is pressed, then T-DATA-2 = 0.
As soon as the microprocessor has accepted the PLAY command it transmits the address 1, 0, 1 and T-DATA-2 = 1; with T-RW = 0 T-SL2 becomes 0 and enables the 8-bit register IC4. The available data bit T-DATA-2 = 1 is transferred into the register with the rising edge of T-SL2. B-PLAY is switched on through the driver stage IC2. It remains on until the swich-off command (T-DATA-2 = 0, T-RW = 0, T-ADR-X, Y, Z = 1, 0, 1) arrives.

Liquid-crystal display (LCD)

The 4 1/2 position liquid crystal display with leading negative sign is controlled by the three address bits T-ADR-X, Y, Z as well as T-CUSTR and the 8 data bits. The address decoder of the command unit also requires the signal T-SL1.

The digits are selected with T-ADR-X, Y, Z; the segments with T-DATA-0, 1, 2, 3. If both T-ADR-Z and T-CUSTR are low, the available data are read in; if one of the two signals changes to high, the stored data are written on the outputs. The display decoder/driver for four digits with built-in oscillator (approx. 60 Hz) is implemented in CMOS-LSI technology and can directly select the four digits of the LC display.

The data T-DATA-4, 5, 6, 7 are read into the 4-bit D-flip-flop IC2 during the rising edge of T-SL1. They define the two colons, the leading negative sign and the digit 1 (hour).

Display example: - :43:10 (-43 minutes, 10 seconds)

DISPLAY	ADDRESS Z Y X	DATA BITS 7 6 5 4 3 2 1 0
- : :	1 0 0	1 0 1 1 × × × ×
4	0 0 0	× × × × 0 1 0 0
3	0 1 0	× × × × 0 0 1 1
1	0 0 1	× × × × 0 0 0 1
0	0 1 1	× × × × 0 0 0 0

× = "dont care"

The control frequency of the LC display can be varied by changing the rating of the capacitor C1 on the DISPLAY BOARD 1.810.736 in order to optimize the contrast of the display to various viewing angles.

The rating selected for C1 has been optimized to a horizontally installed machine (perpendicularly and lightly slanted viewing from the front). For other applications, the rating of C1 should be determined empirically, however 220 pF should not be exceeded.

Tape timer display (LED version)

(Only applicable in conjunction with the new MPU board 1.820.780).

This 5-position LED display with leading negative sign is controlled by the three address bits T-ADR-X, Y, Z as well as T-CUSTR, T-RW, T-MODESL and the data bits T-DATA-0...3 and T-DATA-7.

The digits are selected with T-ADR-X, Y, Z; the segment with T-DATA-0, 1, 2, 3, and 7. The 8-position display decoder/multiplexer/driver IC1 is implemented in CMOS technology and directly controls the five 7-segment LED displays.

Display example: -.43.10 (-43 minutes, 10 seconds)

DIGIT	ADDRESS Z Y X	T-MODESL	DATA BITS 7	3 2 1 0
-.	1 0 0	0	0	1 0 1 0
4	0 1 1	0	1	0 1 0 0
3.	0 1 0	0	0	0 0 1 1
1	0 0 1	0	1	0 0 0 1
0	0 0 0	0	1	0 0 0 0

In time code models equipped with the new time code amplifier 1.820.719 (in development), the far right decimal point of the LED tape timer is illuminated when a code signal is available at the input or is being read from tape (depending on the INP/SYNC/REP selector).

3.5.8
SERIAL REMOTE CONTROLLER GR 20 EL 03

1.810.751 / 1.820.751

Interface for serial remote control
- Copying audio parameters on tape
- Connection to a terminal
- Connection to the STUDIO bus
- Expanded test system

Copying data on tape

The audio parameters stored in RAM can be copied on tape for back-up purpose through the 9-pin connector used for the serial interface. Pins 2 and 6 of the 9-pin connector must be connected to the RECORD input of the recorder (or an external cassette recorder). Also refer to Section 4.2.7.

The audio parameters stored on tape can be reloaded into the RAM by interconnecting the 9-pin connector with the REPRODUCE output of the tape recorder (or cassette recorder). Also refer to Section 4.2.8.

The send line T-TX of the microprocessor is taken to IC5 (QUAD LINE DRIVER WITH 3-STATE OUTPUTS). The latter's output is enabled by the signal T-DRVENB = 1. The balanced output of the line driver is taken through an isolating transformer to the output terminals.

The signal T-DRVENB is 0 and the output of IC5 are, therefore, at high impedance when no data is sent.

The receive path leads from the connector pins through the transformer to the line receiver "A" of IC2 (QUAD RS 422/423 LINE RECEIVER WITH 3-STATE OUTPUTS). Its output is connected to the microprocessor through the receive line T-RX. An internal hysteresis improves the noise ratio of IC2.

RS 232 terminals

Connector pins 2, 3, 7, 8, and 9 are used for connecting an external terminal that is equipped with an RS 232 interface. SNDATA is the send line. Line driver "A" of IC1 (QUAD LINE DRIVER) processes the send signal (T-TX) of the microprocessor. RCVDATA is the receive line. The receive signal is taken through line receiver "B" of IC2 to the receive line T-RX of the microprocessor.

STUDIO bus

The module 1.810.751 is not laid out for STUDIO bus operation. However, this will be possible with the module 1.820.751 which is in development.

Expanded test system

The expanded test system supports e.g. automatic calibration of the A810 recorder. The expanded test system is not yet implemented at this time.

DEBUG display

The DEBUG display indicates the status of the data bus, the address bus, and the three select lines with the aid of status indicator LEDs.
T-RW and switch 2 (WRITE/READ) determine whether the WRITE or the READ signals of the MPU bus are to be indicated.
IC4 and IC6 (OCTAL D-TYPE FLIP-FLOP WITH 3-STATE OUTPUTS) control the LEDs through driver circuits. The STROBE signals of the SELECT lines together with T-RW, clock the IC4 and IC6. IC3 (HEX INVERTER) delays the display of the STROBE signals (approx. 40 ns) in order to compensate for the cycle preparation delays (IC8).
The debug display is switched on or off with switch 1 (ON/OFF).

The two status indicator lamps SEND and RECEIVE inform whether data is being transmitted on the lines T-TX and T-RX.

3.5.9
Capstan motor control GR 26

PLL control loop of the second order.
A toothed ring coupled to the capstan shaft induces capacitative changes in the tacho sensor (GR 26, EL 06). This variable capacitance determines the frequency of an RF oscillator with Q3. The change in capacitance causes a frequency modulation of the oscillator signal which is demodulated in IC2 (FM-IF AMPLIFIER AND DEMODULATOR). The AF voltage, the frequency of which is proportional to the capstan speed, is shaped into a square-wave signal and constitutes the actual value of the control loop.

The reference value is generated by dividing the 9.6 kHz reference frequency of the microprocessor. The reference frequency T-REFINT is divided in IC4 (PROGRAMMABLE DIVIDE-BY-N COUNTER) as a function of the selected tape speed either to 1600 800, 400, or 200 Hz (corresponds to 30, 15, 7.5 or 3.75 ips). The ratio of division is determined by the signals T-SPSL1 and T-SPSL2:

RATIO OF DIVISION	:6	:12	:24	:48
T-SPSL1	0	0	1	1
T-SPSL2	0	1	1	0

IC 10 converts the TTL level to CMOS level.

The actual value and the reference value are compared in a phase comparator circuit (IC 5/2, IC6, and IC7). A control signal results on the output of IC7 (PARALLEL-IN / PARALLEL-OUT SHIFT REGISTER). This signal is taken through a low-pass filter to IC/1, an integrator, and IC1/2.
The speed signals T-SPSL1, 2 influence the control characteristic via Q4, Q5.

The output signal of IC1/2 controls the motor transistor Q1. The motor current flows from the 130 VAC transformer winding through the capstan motor winding, the rectifier bridge DZ1, and in the form of a pulsating DC current through the motor transistor Q1.
The voltage drop at R1 is an image of the motor current.

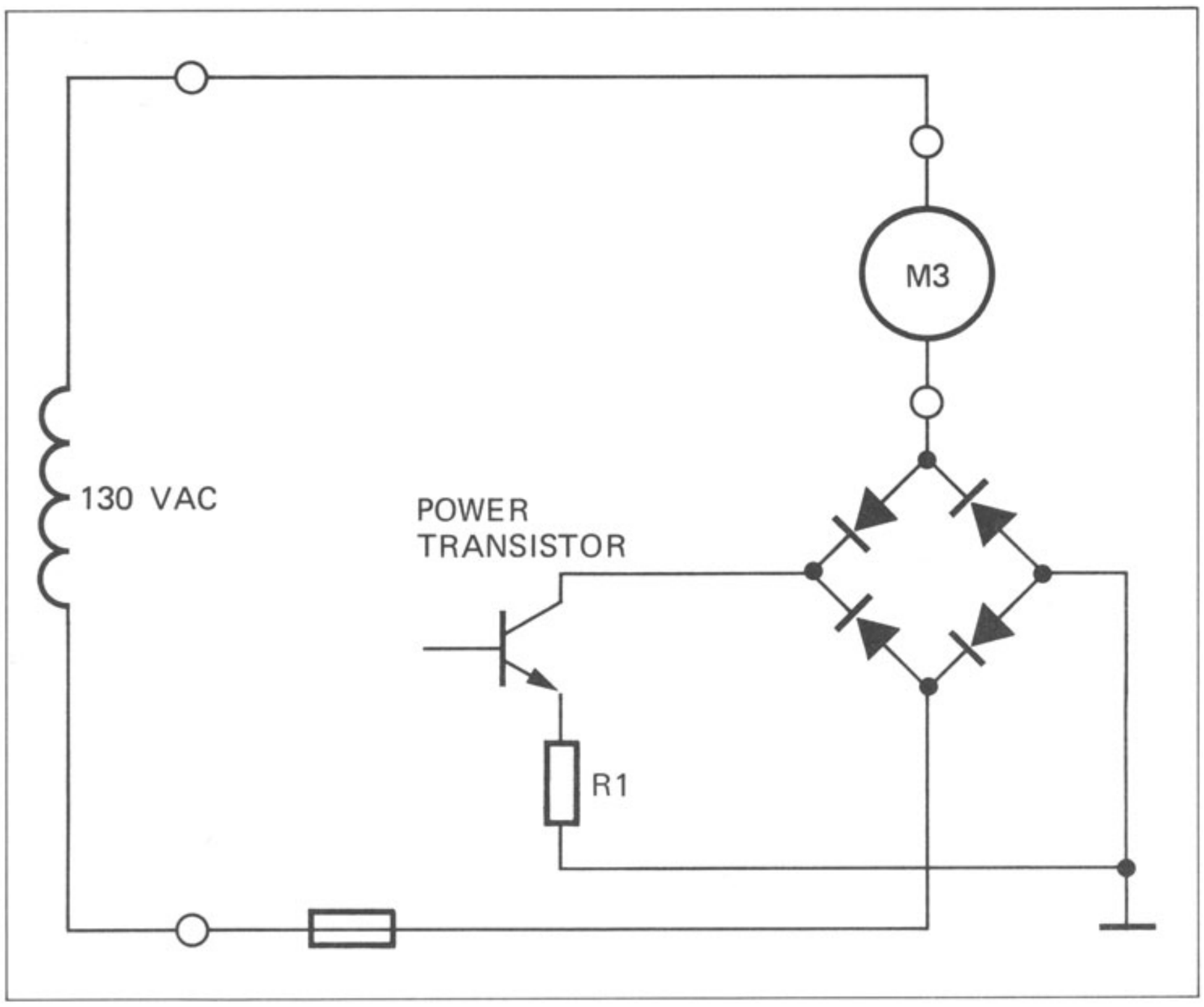

DC braking is activated when switching to a lower tape speed or if fast speed reduction is initiated by the varispeed control. The brake transistor Q2 is controlled through IC3; a pulsating DC current flows from the auxiliary phase through D3, Q2, and R19.
The circuit with IC12/2 (RETRIGGERABLE / RESETTABLE MONOSTABLE MULTIVIBRATOR) and Q6 enables Q2 only if the speed is reduced through T-SPSL1, 2 or T-REFEXT.

Through IC12/1, the control signal on the output of IC7 controls the status indicator lamp DL1 and the signal T-SYNCAP which informs the microprocessor that capstan lock has been achieved.

3.5.10
Spooling motor control GR 24

The operating frequency of the switched spooling motor control is 76.8 kHz. This frequency is obtained by dividing the microprocessor clock frequency.

The 130 VAC spooling motor voltage is switched on and off with the clock frequency. The motor output depends on the cyclic duty factor.

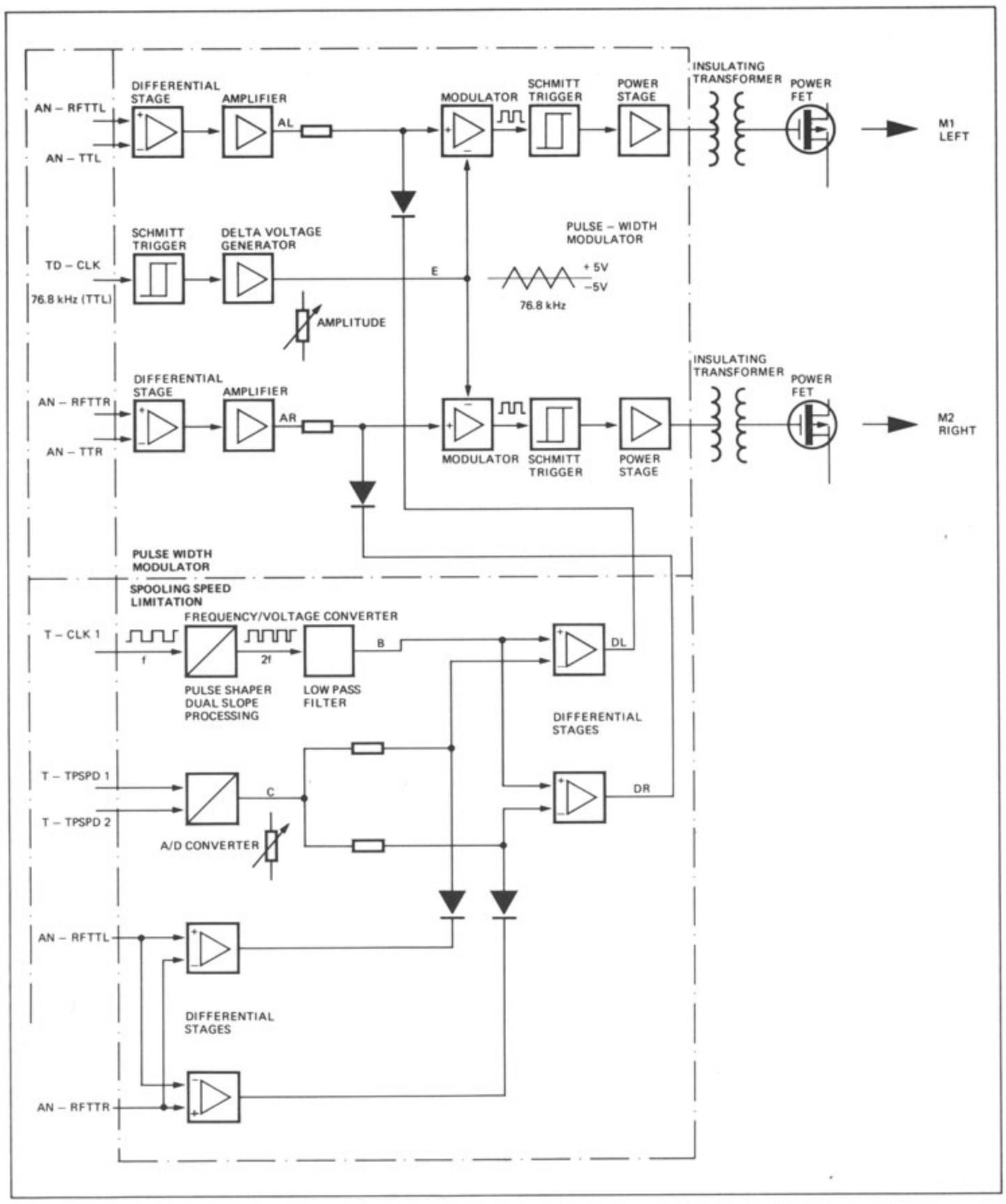

Pulse width modulator:

From the signals AN-TTL (AN-TTR) (actual tape tension) and AN-RFTTL (AN-RFTTR), (reference tape tension), a differential signal is created that is amplified in IC7/2 (IC10/2).

Noise voltages are eliminated by a Schmitt trigger (IC2) from the signal TD-CLK (76.8 kHz) that has been derived from the clock frequency of the microprocessor. The signal is subsequently taken to a delta generator (IC1, Q1, Q2, D2... D5). The delta generator converts the 76.8 kHz square-wave voltage into a delta voltage of the same frequency that is balanced relative to neutral. The amplitude of this voltage is adjustable with R65.

In the pulse width modulator IC8 (IC11), the delta signal is modulated with the differential signal (AN-RFTT - AN-TT). With the differential signal (AN-RFTT - AN-TT), control pulses are formed through an additional Schmitt trigger IC9/1 (IC12/1) and the power stage IC9/2...6 (IC12/2...6). These signals are of proportional duration, i.e. a large differential signal results in wide control pulses or high motor output.

The amplified differential signal (AN-RFTTL - AN-TTL or AN-RFTTR - AN-TTR) is clamped with diodes D15 and D12 or D16 to 4.3 V + 0.7 V = 5 V. The amplitude of the delta voltage is adjusted so that the cyclic duty factor of the control pulses does not exceed 95%.

Limiting the spooling speed:

The spooling speed can be reduced from the maximum speed (approx. 10 m/s) to 7, 4 or 1 m/s by pressing TRANS <REDUCED> and one of the spooling keys.

The spooling speed is maintained exactly at the selected value by reducing the duty factor of the control pulses (motor output!).

The speed information is supplied by the tape move sensor coupled to the right-hand guide roller. The square-wave is converted by a pulse shaper with two-edge interpolation IC6/1, 2 into a pulse train of doubled frequency, i.e. a pulse of constant width is formed from each edge of T-CLK1.

A low-pass filter C7/R22/C6 converts these pulses to a DC voltage that is proportional to the tape speed (actual value). This voltage is applied to the differential stages IC3/1, 2.

The two signals T-TPSD1, T-TPSD2 determine the spooling speed. They are converted into a DC voltage (reference value of the spooling speed) by the digital/analog converter IC5. The reference value is adjustable with R66 and is taken through R14, R15 to the differential stages IC3/1, 2.

The signals AN-RFTTL, AN-RFTTR (tape tension reference value) determine through the differential stages IC4/1, IC4/2 the motor (take-up side) for which the driving must be reduced.

The output signals of the differential stages IC3/1 and IC3/2 limit the differential signals (AN-RFTTL - AN-TTL or AN-RFTTR - AN-TTR respectively) and directly influence the width of the control pulses.

Spooling motor output stage:

The spooling motor output stage is supplied directly by the 130 VAC of the power transformer. This AC voltage is taken through fuse F1 to the rectifier bridges DZ1, DZ2. The variable-width control pulses are taken through T1, T2 to the NMOS power FETs Q6, Q5.

These FETs are switched on and off with a frequency of 76.8 kHz and supply a motor current to the spooling motor, the average of which is proportional to the duty factor (pulse width) of the FETs.

The arrangement with the rectifier bridges ensures that the current switched on and off by the FETs always flows in the same direction (pulsating DC current), regardless of the changing polarity of the 130 V motor supply.

The motor current flows through the storage chokes L1, L2 and the spooling motors back into the transformer winding.

A magnetic field is built up in the storage chokes L1, L2 while the FETs are switched on. This field is eliminated at the moment the FETs are switched off, thereby inducing in the choke a voltage of inverse polarity. This voltage causes a current to flow through the free-wheeling diodes D20 ... D23, the commutator circuit, and the motor winding. The commutator circuit with Q3, Q7 (for the negative half-wave) and Q4, Q8 (for the positive half-wave) shape this free-wheeling current so, that no dangerous voltage spikes can occur, i.e. also the free-wheeling current is a DC current that pulsates with the frequency of the line voltage.

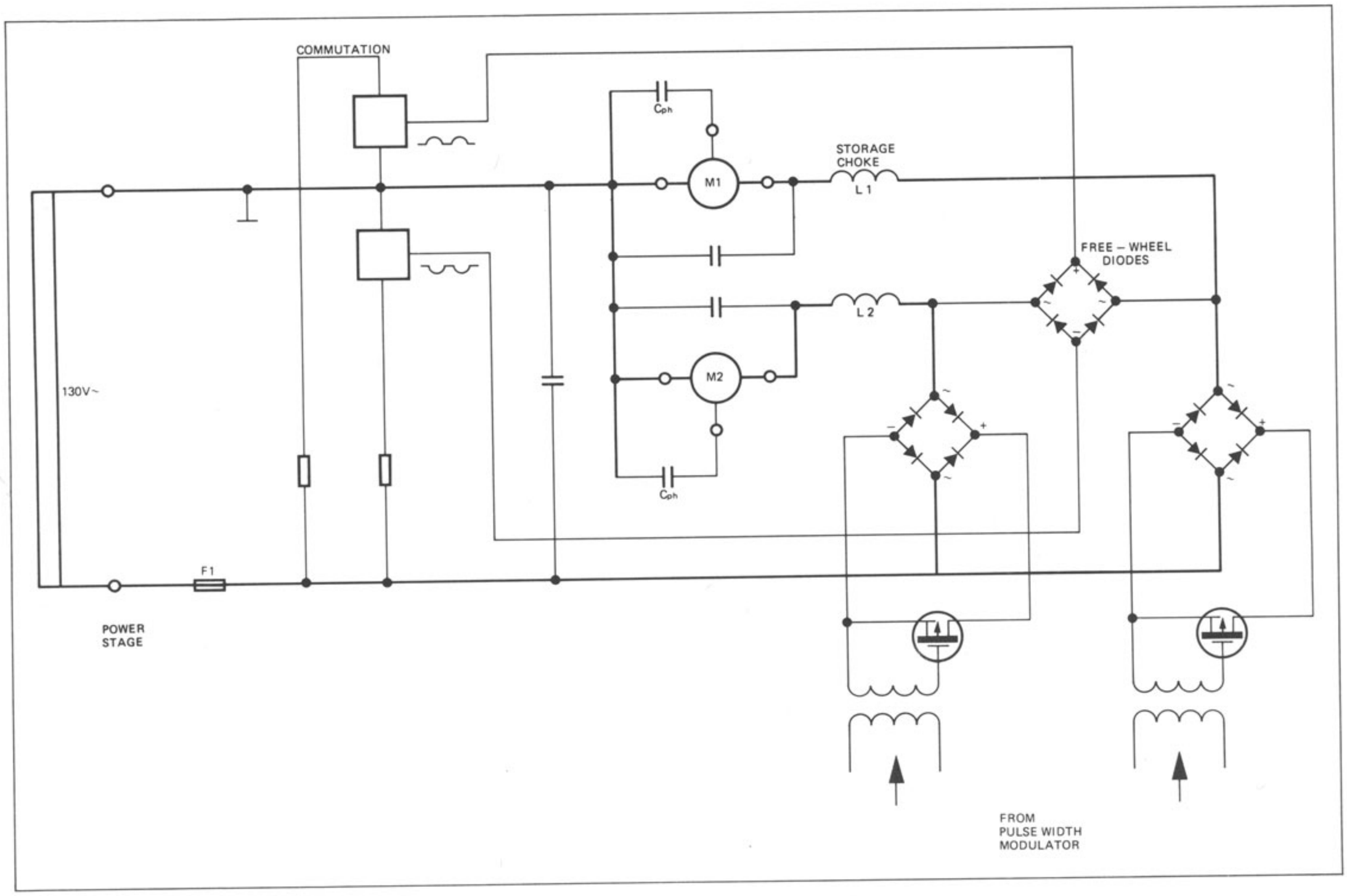

3.5.11
Tape tension sensors GR 27, GR 28

IC 1/1 and IC 1/2 together with C5, R16, and R17 form an oscillator that operates with a frequency of approx. 833 kHz. The oscillator signal is amplified and induces in L1 an alternating magnetic field. The decoupling coil L2 is damped more or less by the screening plate coupled to the sensor arm. The damping depends on the deflection of the tape tension sensor. The bridge D1 ... D4 rectifies the output signal of L2. The signal is amplified in IC2/1 and IC2/2 and filtered clean of noise voltages. The signal at AN-TTL/R is adjusted with R5 to 0 ±50 mV (no deflection) and to +4 V ±50 mV with R14 (maximum deflection).

3.5.12
Tape move sensor GR 28, EL 05

The 10 teeth of the serrated ring interrupt the two light barriers DLQ 1 and DLQ 2 for when the right-hand guide roller is rotating. As a result they switch Q1 and Q2 on and off.
The light barriers are arranged so that the output signals (T-CLK1 and T-CLK2) are offset by 90°.

3.5.13
Tape end sensor GR 27 EL 04, GR 28 EL 06

When the tape end sensor is in the neutral position, the light barrier (GR 27, EL 04 or GR 28, EL 06) is switched on and the output signal T-TENDL/R = 0.

SECTION 4 AUDIO

	Audio block diagram	4/1
4.1	CIRCUIT DESCRIPTIONS	4/2
4.1.1	Line amplifier, input/output connections	4/2
4.1.2	Reproduce amplifier, preamplifier in headblock	4/3
4.1.3	Mono-stereo switch (option)	4/4
4.1.4	HF driver	4/5
4.1.5	Record amplifier	4/6
4.1.6	Time code channel	4/8
4.2	CALIBRATION	4/11
4.2.1	Introduction	4/11
4.2.1.1	General	4/11
4.2.1.2	Level	4/12
4.2.1.3	Equalizations	4/12
4.2.1.4	Magnetic reference flux	4/12
4.2.1.5	Calibration tapes	4/13
4.2.1.6	Preparatory steps	4/14
4.2.1.7	Input keyboard	4/16
4.2.2	Reproduce adjustments	4/19
4.2.2.1	Preparatory steps	4/19
4.2.2.2	Reproduce level adjustment	4/19
4.2.2.3	Azimuth alignment of reproduce head	4/20
4.2.2.4	Frequency response adjustment	4/21
4.2.2.5	Adjustments for the slow tape speed	4/22
4.2.3	Record adjustments	4/22
4.2.3.1	Preparatory steps	4/22
4.2.3.2	Record level preadjustment	4/23
4.2.3.3	Aligning the azimuth of the record head	4/23
4.2.3.4	Bias adjustment	4/24
4.2.3.5	Azimuth alignment STEREO	4/24
4.2.3.6	Record level adjustment	4/24
4.2.3.7	Frequency response adjustment	4/24
4.2.3.8	Cross-talk adjustment	4/25
4.2.4	Sync adjustments	4/26
4.2.4.1	Preparatory steps	4/26
4.2.4.2	Reproduce level adjustment	4/26
4.2.4.3	Frequency response adjustment	4/26
4.2.4.4	Adjustments for the slow tape speed	4/27
4.2.5	Time code reproduction	4/27
4.2.5.1	Preparatory steps	4/27
4.2.5.2	Checking the height of the heads	4/28
4.2.5.3	Tape guidance	4/29
4.2.6	Time code recording	4/30
4.2.6.1	Preparatory steps	4/30
4.2.6.2	Adjusting the height of the r.h. code head	4/30
4.2.6.3	Preparatory steps	4/31
4.2.6.4	Bias adjustment	4/32
4.2.6.5	Record level adjustment	4/32
4.2.7	External storage of audio parameters	4/33
4.2.7.1	Principle of saving the audio parameters	4/33
4.2.7.2	Connecting the (cassette) recorder to the remote control socket	4/33
4.2.7.3	Preparatory steps	4/34
4.2.7.4	Saving the audio parameters	4/34
4.2.7.5	Verification	4/35
4.2.8	Reading in the audio parameters through the serial interface	4/36
4.2.8.1	Connecting the (cassette) recorder to the remote control socket	4/36
4.2.8.2	Preparatory steps	4/36
4.2.8.3	Loading the audio parameters	4/36

4.2.9	Programming the operating parameters	4/37
4.2.9.1	Code switches of the COMMAND UNIT	4/37
4.2.9.2	Code switches of the PERIPHERY CONTROLLER	4/40
4.2.9.3	Code switches LINE AMPLIFIER	4/41
4.2.9.4	Jumper REPRODUCE AMPLIFIER	4/43
4.2.9.5	Jumper VU-meter amplifier	4/43
4.2.9.6	Jumper and code switches SERIAL REMOTE CONTROLLER	4/44
4.2.9.7	Code switches SERIAL INTERFACE	4/45
4.2.9.8	VU-meter panel internal or external	4/45
4.2.9.9	Jumpers M/S SWITCH and/or TEST GENERATOR	4/46
4.2.9.10	Jumper TIME CODE READ/WRITE UNIT	4/47
4.2.9.11	Jumpers TAPE DECK CONTROLLER	4/48
4.2.9.12	Jumpers CAPSTAN MOTOR CONTROL	4/49
	BIAS ADJUSTMENTS	4/51

SECTION 4 AUDIO

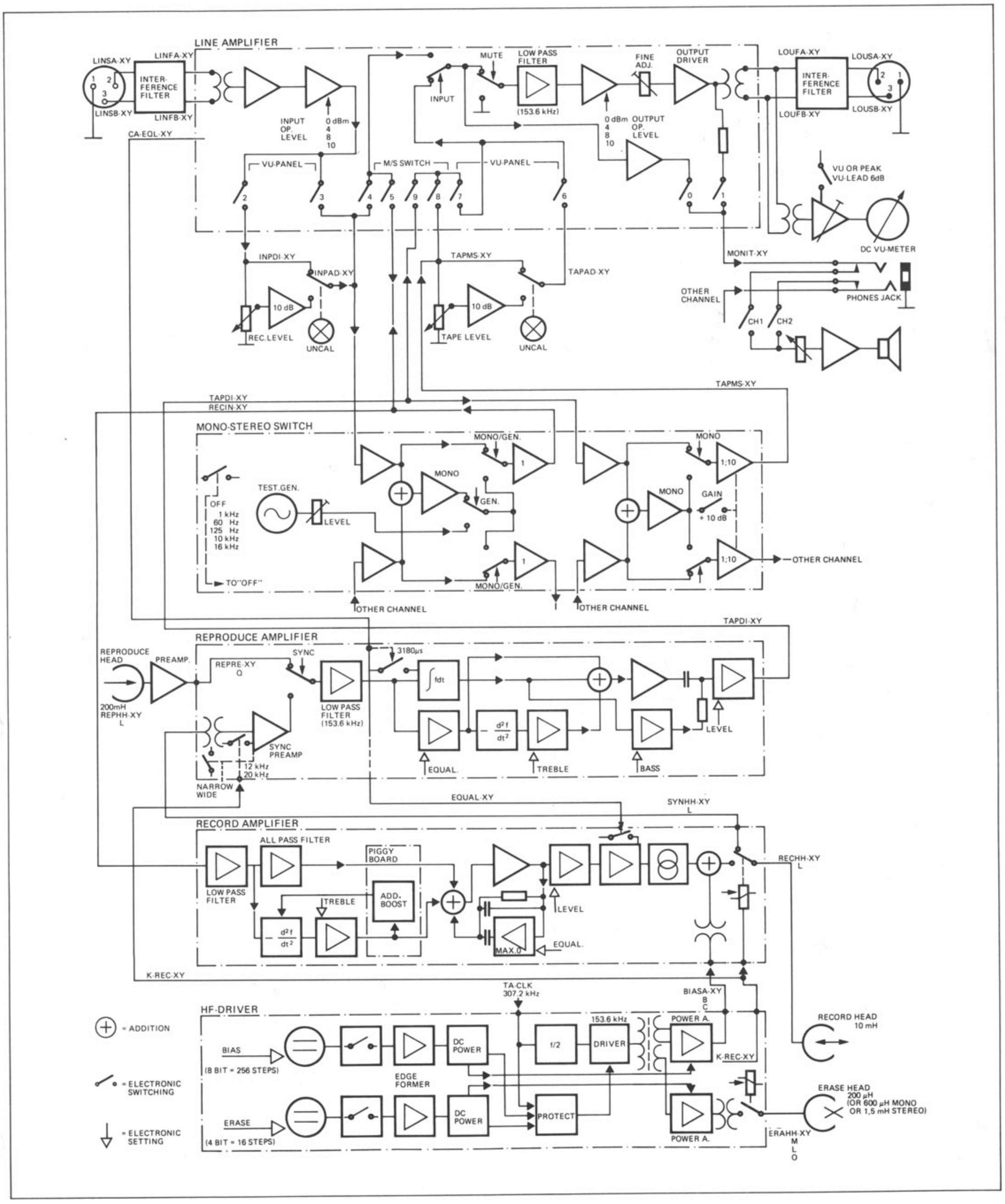

4.1
CIRCUIT DESCRIPTIONS

The Audio section comprises:
LINE AMPLIFIER
REPRODUCE AMPLIFIER
MONO-STEREO SWITCH (Option)
RECORD AMPLIFIER
HF DRIVER
CODE READ/WRITE UNIT and CODE DELAY UNIT (option)

It also includes the following peripheral assemblies:

Headblock
Level meters
Monitor amplifier
Record and reproduce level controls
} depending on version

4.1.1
Line amplifier GR 20 EL 11, EL 16, input and output terminals

1.820.714 (with input/output transformer)

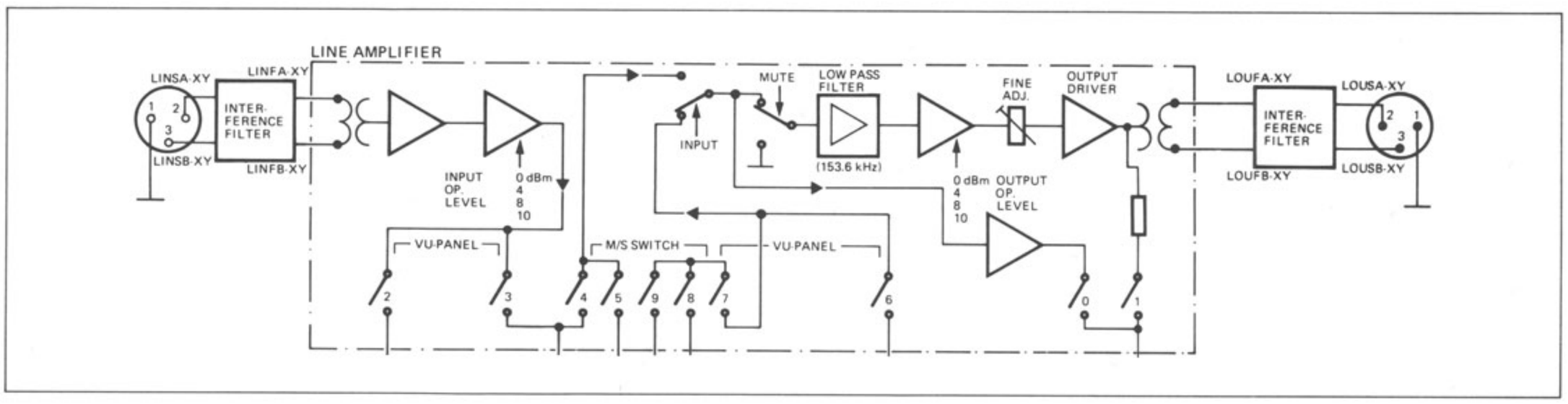

The following settings are made by the microprocessor through an 8-way D-flip-flop (IC1):

CA-DATA0...3	switches the input level of the input and output to 0, 4, 8, or 10 dBm.
CA-DATA4	switchover from INP to REP/SYNC.
CA-DATA5	muting of line output.
CA-DATA6	switches the reproduce amplifier from REP to SYNC.
CA-DATA7	switches NAB equalization (3180 µs) on.

The flip-flop transfers the data available on the D-inputs to the Q-outputs with the rising edge of the clock pulse.

The input signal is taken from the input connector through a noise filter to the line amplifier. The noise filter prevents high-frequency voltages generated by nearby transmitters from entering into the tape recorder through the connecting cable.

Noise frequencies are eliminated by a low-pass filter ahead of the input transformer.
The input amplifier with IC3/1 is followed by the trimmer potentiometer R51 with which the manufacturing tolerances of the input transformer are compensated. The gain factor of IC3/2 is switched to the desired line level by the flip-flop outputs and Q1, Q2, and Q3.
Switch S1 matches the line amplifier to the corresponding recorder configuration: with or without VU-meter panel or mono-stereo switch.

IC4, IC5, and IC7 switch the line amplifier output from INP to REP/SYNC; IC2, IC6, and IC8 mute the output.
The input selector/muting switch is followed by a low-pass filter with IC10/1. This filter is adjusted with trimmer C22 to maximum attenuation of the 153.6 kHz erase frequency. The gain of IC10/2 is switched to the desired line level by the flip-flop outputs and Q6, Q7, and Q8.
Fine-adjustment of the output level is made with R84. IC9/2 drives the complementary output transistors. The signal is taken to the output socket through a line balance transformer and an additional interference filter.

The signal for the headphones socket and the internal monitor amplifier is tapped before the transformer. The level meters are supplied by the balanced output signal.
The headphones/monitor signal can be switched to the output of IC9/1 with JS0 and JS1 of S1. In this case the monitor level is not affected by the line level adjustment and the muting of the output.

4.1.2
Reproduce amplifier GR 20 EL 10, EL 15; preamplifier in headblock

1.820.710

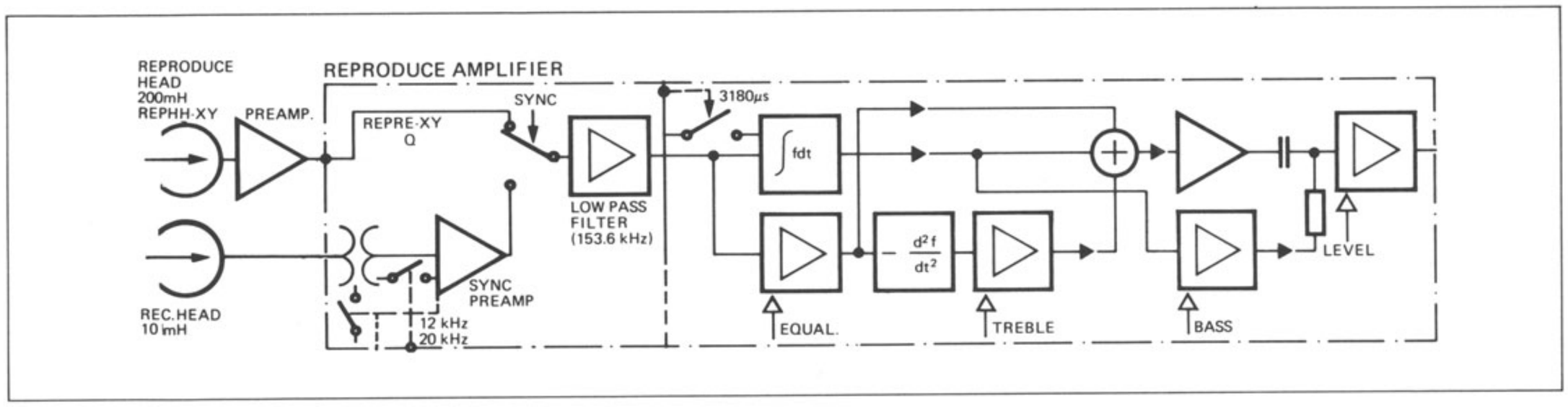

A reproduce preamplifier 1.810.710/711 (GR 32 EL 2) is located between the reproduce head and the reproduce amplifier. This preamplifier which is mounted directly on the headblock (GR 32) produces a gain of approx. 30 dB. Q1 and Q4 are low-noise transistors; IC1 is a low-noise compensated dual opamp. The preamplifier is linear up to approx. 25 kHz.
The preamplifier is only switched on when both supply voltages (+/- 15 V) are present (D1, Q2). This prevents current from flowing through the head winding and hence magnetizing of the reproduce head if one of the supply voltages is missing.
Cross talk between the two channels is adjusted to the minimum with trimmer potentiometer R14.

The reproduce signal is taken through screened lines to the reproduce amplifier.
The reproduce amplifier is designed so that it can process either the reproduce signal or the sync reproduce signal. The input signal is switched over from normal reproduction to sync reproduction by the signal CA-SYN-01 (-02) through IC10 and the FET switches IC5 and IC6. The sync signal is conducted through the input transformer T1 and the sync amplifier with Q1, Q2, and IC7/2. The bandwidth of the sync amplifier can be switched over from 12 kHz to approx. 20 kHz by means of a jumper; however, strong cross talk is to be expected between the record and the sync reproduce channel on 2-channel recorders.

The reproduce signal is taken through a low-pass filter with IC14/2. This filter is adjusted with trimmer C31 to maximum attenuation of the 153.6 kHz erase frequency.

The signal CA-EQL-01 (-02) switches the 3180 µs time constant (IC14/1) through IC9 and FET switch IC4.

A signal of the auxiliary path (inverting, two-fold differentiating circuit) is added to the signal of the main path (integrator with IC14/1) for phase-linear gap loss correction of the reproduce amplifier.

The equalization time constant is set with IC16, IC15/1; the reproduce frequency response is set with IC13, IC15/2 (treble) and IC8, IC7/1 (bass). The parameters stored in RAM are transmitted from the MPU to the corresponding 256-step attenuators.

The reproduce level (resolution 256 steps) is set with IC11, IC12/2.

IC2 (DUAL BINARY TO 1-OF-4 DECODER/DEMULTIPLEXER) decodes the address of the corresponding digital/analog converters IC8, 11, 13 or 16 from the address lines of the CMOS bus (CA-ADR-R, -S, -T, -U), and enables the D/A converters for data transmission.

4.1.3
Mono-stereo switch GR 20 EL 12 (option)

1.820.720/724

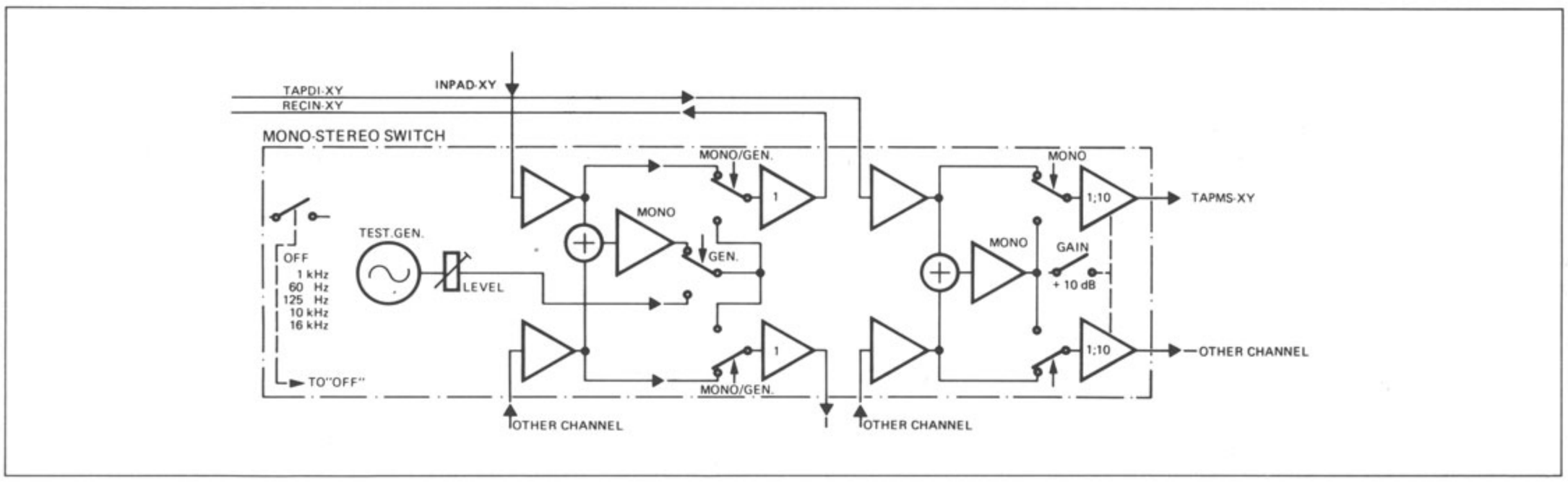

The mono-stereo switch processes the two input signals and the two reproduce signals in separate branches.

The input signals INPAD-01, 02 are taken with internal reference level 0 dBm from the outputs of the two line amplifiers to the mono-stereo switch. The signals buffered by the impedance transformer IC 3/1, 3/2 are taken in stereo mode directly to IC 6/1, 6/2. In mono mode they are added with resistors R42 and R37 and amplified in IC 25/1. The level of the mono signal is matched by R205. Mono/stereo switching is initiated by IC19 (PROM) and comparators IC 13/1, 16/2 with the aid of FET switches.
The operating mode is selected with jumper JS2: mono signal INPAD-01 + INPAD-02 or INPAD-01 only.
The signals RECIN-01, 02 which are taken with internal reference level to the record and line amplifiers are developped from the output signals of IC 6/1 and IC 6/2.

The reproduce signals TAPDI-01, 02 are taken from the reproduce amplifiers to the inputs of the impedance transformers IC 10/1, 10/2 after which they are decoupled and added with R81 and R80 to a mono signal. The mono signal is amplified in IC 31/1; the level can be adjusted with R206. FET switches are used for change-over between mono and stereo.
The operating mode is selected with jumper JS3: the mono signal can either be connected to channel 1 + 2 (TAPMS-01, 02) or to channel 1 only (TAPMS-01).
The signals TAPMS-01, 02 are taken to the output stages of the line amplifiers.

TEST GENERATOR

(1.820.724 only)

The test frequencies are generated by the function generator IC2. The balance is adjusted with R8, the sine shape with R20. The frequencies are switched over by IC 20 (PROM) and Q1...Q5. The frequency generator is switched on by pressing the FREQUENCY button (REF status indicator lamp turns on, i.e. reference frequency, normally 1 kHz, has been selected). Each subsequent pressing of this button switches the frequency as follows:
- 60 Hz - 125 Hz - REF - 10 kHz - 16 kHz - OFF - REF - 60 Hz - etc.

The generator level (-10 dBm or 0 dBm) can be selected with the LEVEL button. (When -10 dBm is selected, the gain in the reproduce branch of the mono-stereo switch is automatically increased by 10 dB; the reference value of the VU-meter is thus again 0 dB when calibrating with tape).
The LEVEL button is only enabled after the test generator has previously been switched on with the FREQUENCY button.

The output signal of the function generator is taken through IC 31/2 and IC 25/2 to the mono branch. The output signals of IC 7/1, 23/2 determine whether the input signals (INPAD-01, 02) or the test signal is input to the record amplifiers (RECIN-01, 02). FET switches are used for change-over.
The generator level is set with R208.
The operating instructions for the test generator can be found in Section 2.5.19.

4.1.4
HF driver GR 20 EL 08, EL 13

1.820.713

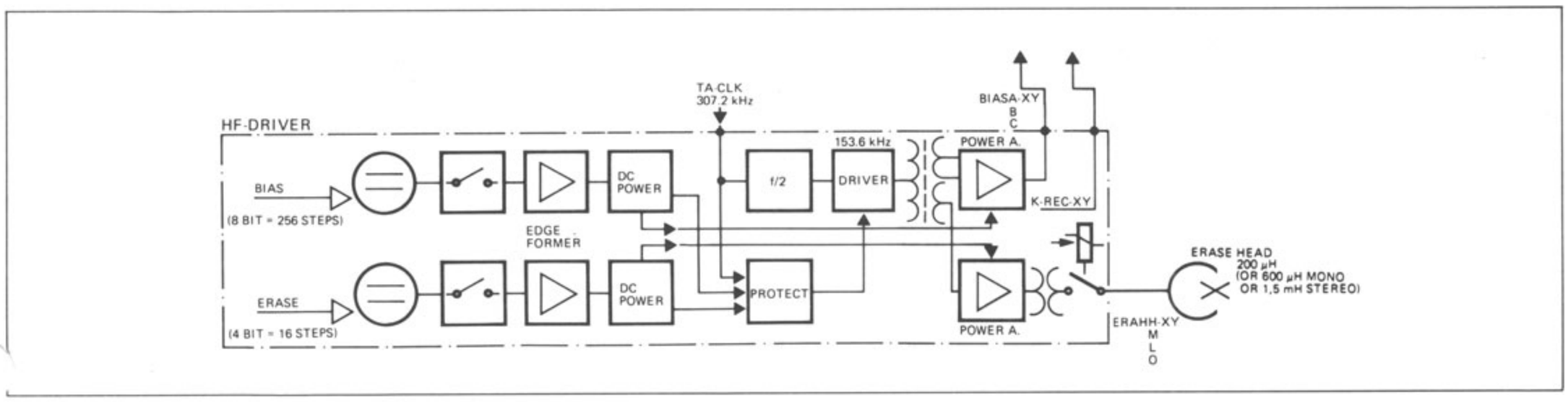

The erase and the bias currents are prepared on the HF driver.

The microprocessor quartz reference TA-CLK with 307.2 kHz is divided in IC3 (DUAL JK NEGATIVE EDGE-TRIGGERED FLIP-FLOP) to 153.6 kHz. The outputs of the IC are connected to the HF driver IC11.
The erase and bias output stages are controlled by the windings of transformer T2.

The DC supply voltage for the erase current is defined with IC1 (OCTAL D-TYPE FLIP-FLOP) and IC 6/2 (in 16 steps; data lines CA-DATA-0...3). The DC supply voltage for the bias current is defined by the 256-step attenuator IC2 according to the parameters stored in RAM.
IC1 also decodes the commands for switching on the erase and the bias current. CA-SAFE = 0 enables IC1.

The bias current is set by the MPU through IC2 in 256 increments according to the parameters stored in RAM.

The DC voltage levels defined by the microprocessor are switched on or off by Q1 (erase current) and Q2 (bias current). IC 9/1 or IC 10/1 respectively shape the on or off edge in such a way that click-free "soft" drop-in and drop-out is achieved. IC9, Q13, and IC10, Q12 supply the DC currents for the corresponding power output stages. These DC currents are proportional to the required output currents. Q11 or Q10 respectively monitor these currents and switch the HF driver IC11 off through D12 and comparator IC 8/1 if an overload occurs.

The clock signal (IC3, PIN 9) is monitored; if it is missing or corrupted, the HF driver is also switched off by IC 8/1.

The stand-by signal TA-ACT-01 (-02) is connected through by IC 8/2 in order to signal to the microprocessor the operating status of channel 1 or 2. TA-ACT checks that the record amplifier is inserted in the recorder.

The erase current is amplified by Q5 and Q8 and conducted through T1 to the output.
IC7, IC4, and relay K1 switch the erase current on or off.

The bias current is amplified by Q3 and Q4 and taken to the output.

4.1.5
Record amplifier GR 20 EL 09, EL 14
1.820.712

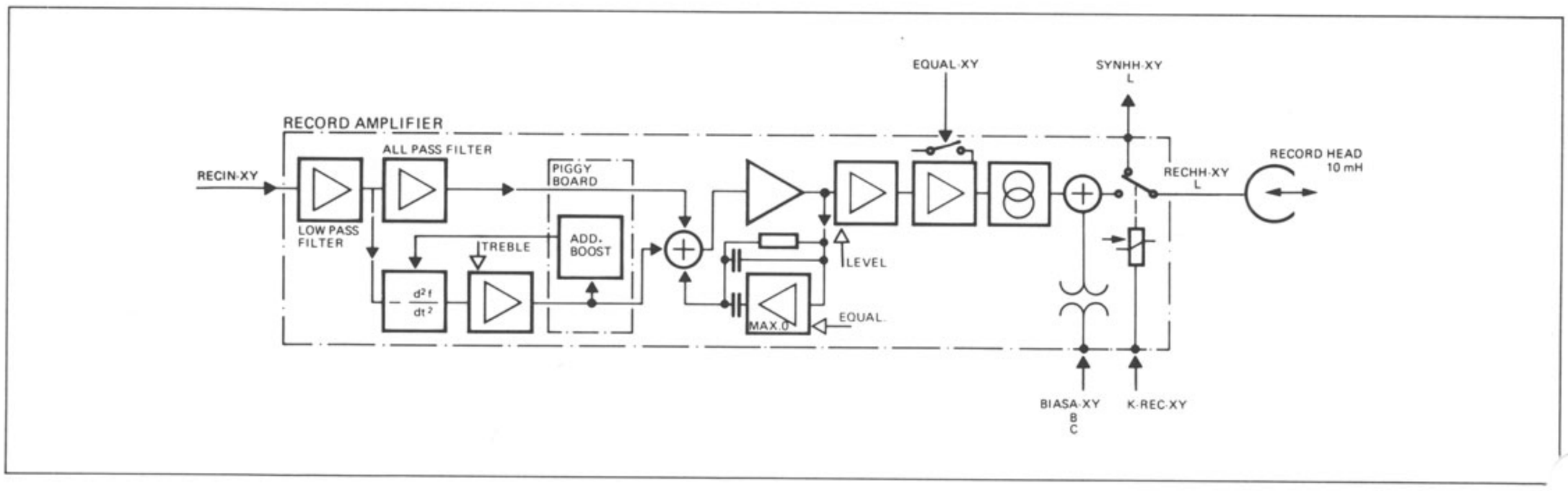

The audio signal RECIN-01 (-02) arriving from the line amplifier is conducted through a low-pass filter with IC 7/1. The low-pass filter is designed for maximum attenuation of the 153.6 kHz erase frequency.

The treble losses caused by the air gap in the record head are compensated by a phase-linear correction section. The interting, two-fold differentiating circuit (IC10) is followed by the final control element for the treble setting IC8, IC 9/1 (record frequency response). A portion of the audio signal is mixed as a positive feedback through the plug-in ADAPTATION BOARD into the input of IC 10/2 in order to improve the sharpness of the treble correction. The added components of the corrected recording signal are amplified by IC 9/2.

The equalization time constant is set by IC5, IC 6/1, the record level with IC3, IC6/2. The audio parameters stored in RAM are transmitted by the MPU to the corresponding 256-step attenuators.

The 3180 µs time constant is set by the FET switch IC2 with EQUAL-01 (-02).

The record signal is taken to the opamp IC 4/2 which functions as a current source.
The signal AFCSW-01 (-02) (AUDIO FREQUENCY CURRENT SWITCH) connects the record current through Q1. The record and bias current are added through T1. The two RF filters with L3 and L4 prevent strew-in of the bias frequency into the other circuit components. The bias current is drained through the series-resonant circuit with L2; a closed bias circuit is thus formed by the two windings of T1 and the winding of the record head.

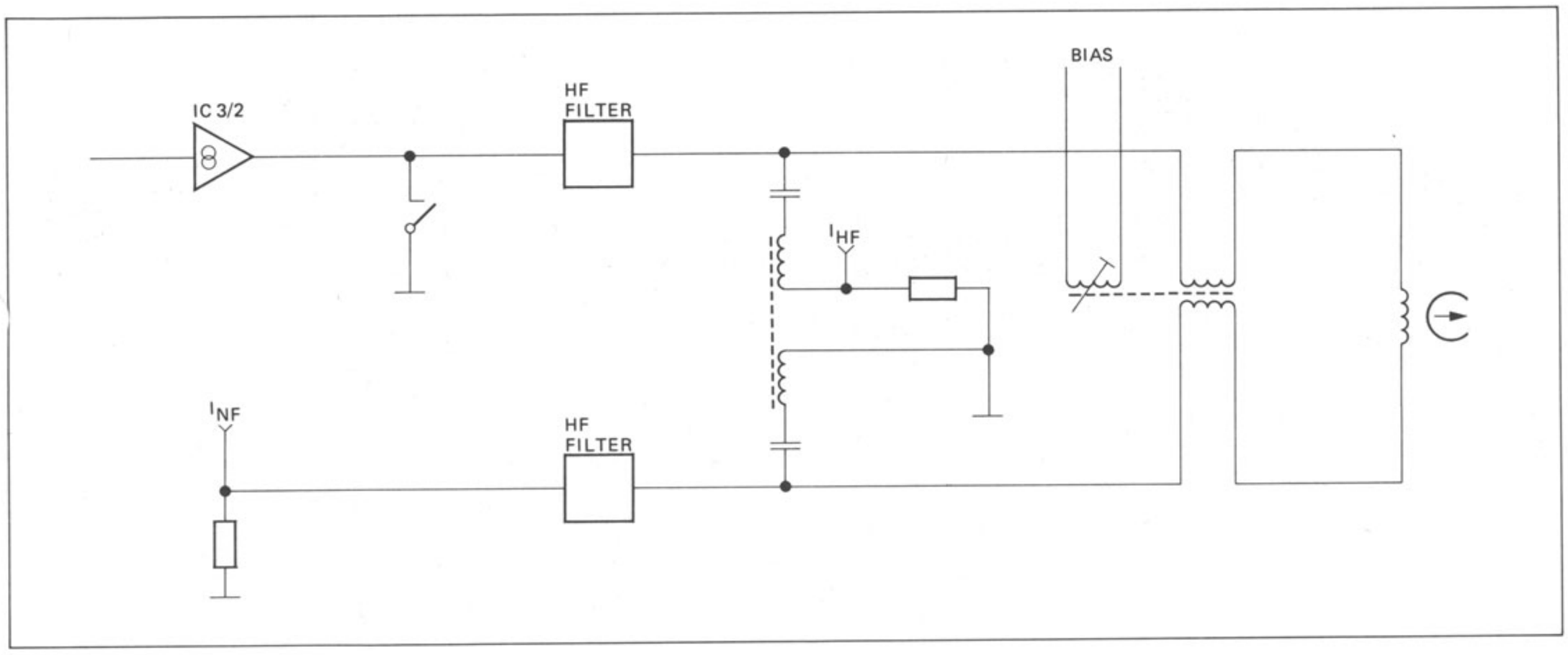

4.1.6
TIME CODE CHANNEL

General

2-Channel recorders can be equipped with the time code option. The 0.4 mm wide code track is embedded between the two audio tracks. The time code signal (80 bits according to SMPTE) is recorded with bias as a phase-modulated (bi-phase modulation) signal. The tape flux is 707 nWb/m (pp).

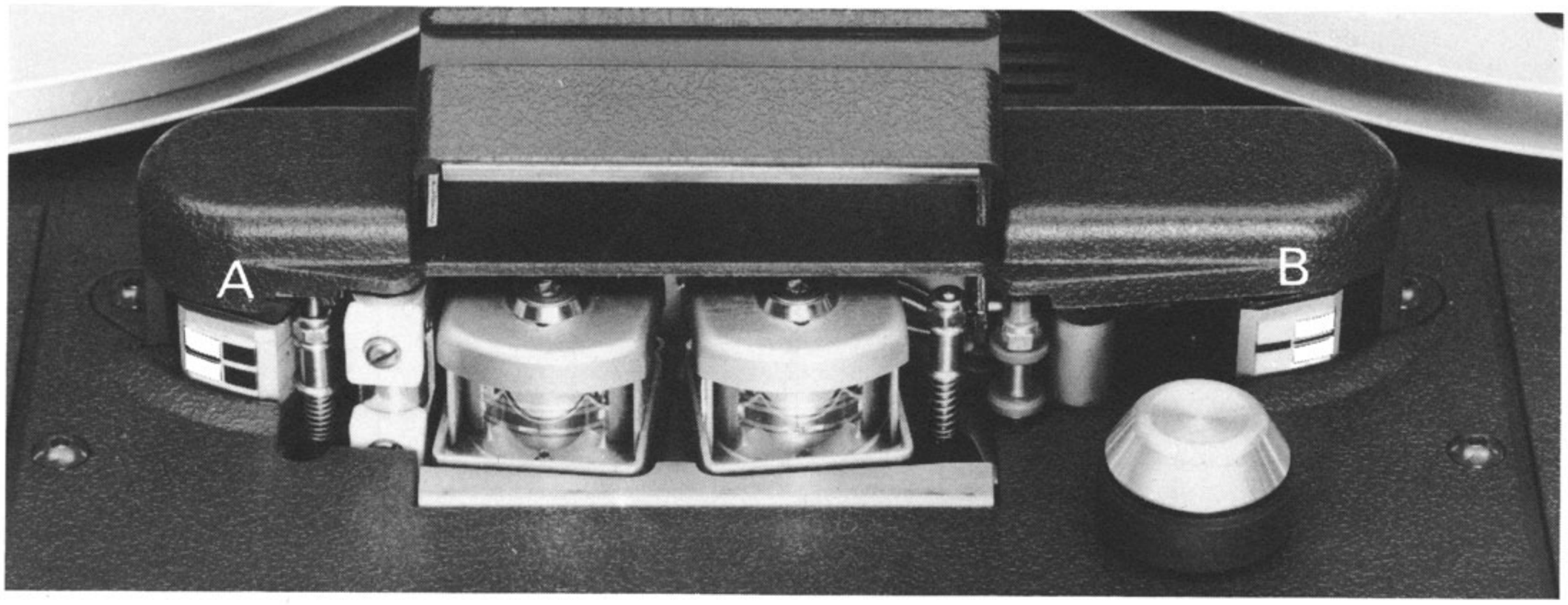

A reproduce (read) head is integrated in the audio erase head (A). This head "reads" in audio reproduce/record mode and during slow forward editing. A second time code head is mounted on the far right of the headblock (B). It is a combined erase/reproduce/record head (read/write head). This head "reads" during spooling and slow reverse editing and is also used for recording the time code signal.

CODE READ/WRITE UNIT GR 20 EL 06

1.820.721

Time code reproduction:

The signal of the left-hand head REPHH-TC, REPHL-TC (enabled during audio reproduction and recording) is taken through a low-pass filter/amplifier with IC10. This low-pass filter suppresses the 153.6 kHz erase frequency (cross talk between audio erase frequency and time code reproduction). The signal of the right-hand code head RECHH-TC, RECHL-TC is taken to the low-pass filter/amplifier IC11, IC14. The band width of the filter is automatically switched over by Q13. The bandwidth is wide during fast spooling and narrow during slow reverse editing.

The outputs of the two filters/amplifiers (signal of the left-hand or right-hand code head) are connected by FET switches Q9, Q8 to the limiter (IC 10/2, IC12, IC 4/1). Even for variable reading speeds (spooling), the latter supplies a constant output signal that is converted by a Schmitt trigger (IC 9/1) into a square-wave signal. The time code reproduce signal is taken either directly or through the CODE DELAY UNIT (jumper JS1 or selector switch IC13) to the line amplifier IC3, the line balance transformer T2, and in the form of signal LOUFA-TC, LOUFB-TC to the balanced and floating output socket.

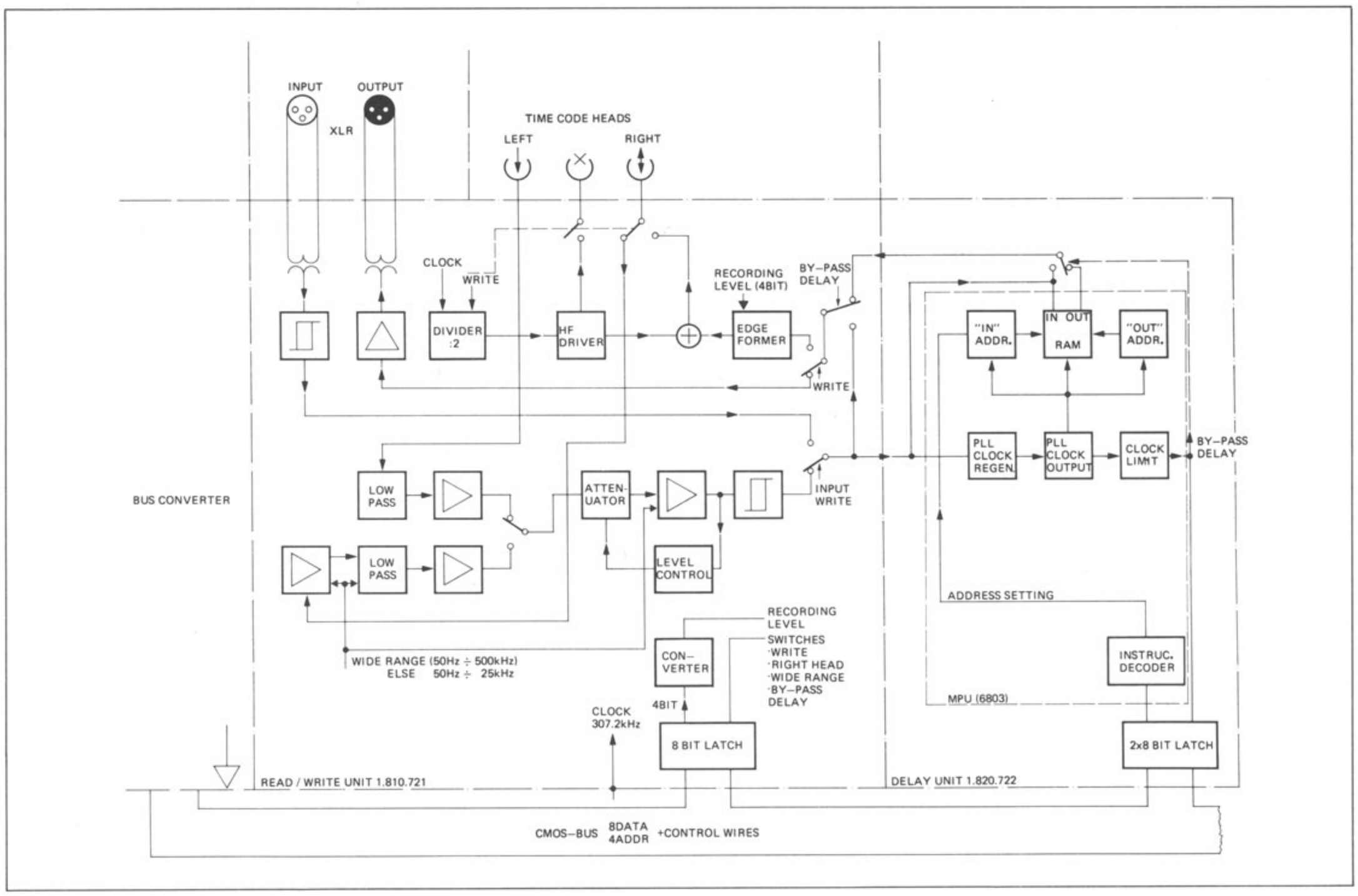

Time code recording:

The recording signal LINFA-TC, LINFB-TC is taken through the balanced and floating input socket and the input transformer T1 to the Schmitt trigger IC 9/2 and the CODE DELAY UNIT. The signal edges are shaped in the record amplifier Q2, IC 7/1, IC 7/2 in such a way that a trapezoidal recording signal is obtained.

The frequency of the signal TA-CLK from the MPU is divided in IC8 from 307.2 kHz to 153.6 kHz and converted in the HF driver IC6 to an erase and a bias signal. The erase current is decoupled by T3 and taken as the signal ERAHH-TC, ERAHL-TC through screened lines to the erase head. The bias current is added by the secondary winding of T3 through trimmer capacitor C9 to the trapezoidal recording signal. The change-over relay K1 determines, whether the combination head functions as a reproduce or as a record head. The output signal RECHH-TC, RECHL-TC is transmitted through screened lines to the combination head.

The following settings are made by the MPU through the CMOS bus (via 8-way flip-flop IC1, address decoder IC5):

- Recording level (4 bits), adjustable with R4, R7, and R15
- WRITE (recording)
- Switch on right-hand code head (slow reverse editing)
- Wide-band reproduce low-pass filter (spooling mode)
- Bypassing the DELAY UNIT)

For bias and level adjustment refer to Section 4.2.6.

CODE DELAY UNIT GR 20 EL 07

1.820.722

The CODE DELAY UNIT delays the time code signal is such a way that the audio and the time code signals on the tape coincide, i.e. the head spacing is automatically compensated.

A second microprocessor (IC2) (6803) performs this function.

A PLL (PHASE LOCKED LOOP) with clock regeneration is implemented by software.

The external memory of the microprocessor comprises 2K PROM (IC18) and 8K RAM (IC14). 8192 1/2-bits = 51 frames can be stored in the RAM.

Data from the MPU (1.810.752 or 1.820.780 respectively) are transmitted through the TTL bus, the bus converter, and the CMOS bus to two 8-bit latches IC8, IC9 of the DELAY UNIT and specify:

- Required delay
- Direction of tape travel
- Bypass command

Delay accuracy: ± 1/4 bit

4.2 CALIBRATION

The audio parameters are copied from RAM and loaded into the registers of the audio amplifiers each time the recorder is switched on, after a microprocessor reset, or when changing the tape speed, the tape type, or the equalization.

When new parameters are entered through the keyboard or through the serial interface, the old parameters stored in the RAM and in the registers of the audio amplifiers are overwritten with the new data.

If the parameters in the RAM are destroyed, the standard parameters are automatically loaded from the PROM. Also refer to Section 2.7.

4.2.1 Introduction

4.2.1.1 General

On recorders equipped with a tape marker, remove the latter (plug-in unit!) before opening the panel flap.

It is assumed that the all mechanical adjustments of the recorder to be calibrated are correct (especially with respect to tape tension and tape guidance).

The soundheads and the tape guidance elements should be cleaned and demagnetized before the recorder is calibrated.

The calibrating steps should always be performed in the following order:

REPRODUCTION:

Tape speed FAST
- Level
- Azimuth alignment of the reproduce head*
- Frequency response

Tape speed SLOW
- Level
- Azimuth alignment of the reproduce head*
- Frequency response

* Minor deviations between the various speeds can occur, depending on the type of calibration tape used. Should this be the case, align the azimuth to the preferred studio speed.

RECORDING:

Tape speed 7,5 or 15 ips (or preferred studio speed)
- Record level preadjustment
- Azimuth alignment of the record head
- Bias
- Record level
- Frequency response

Tape speed 3.75 or 30 ips (or 2nd speed)
- Record level preadjustment
- Bias
- Record level
- Frequency response

SYNC REPRODUCTION

Tape speed FAST
- Level
- Frequency response

Tape speed SLOW
- Level
- Frequency response

4.2.1.2
Level

Applies to VU-meter lead of 6 dB!

0 dBm = 0.775 V

OPERATING LEVEL dBm		PEAK RECORDING LEVEL dBm
0	=	6
4	=	10
8	=	14
10	=	16

4.2.1.3
Equalizations

Equalization networks have been built into the reproduce paths for correcting the frequency response.
The attack points are referred to as transition frequencies and transition time constants ($1/2\pi f$) and have been standardized by various organizations (IEC, NAB, AES, CCIR).

TAPE SPEED	TRANSITION FREQUENCIES, LOW; HIGH (TRANSITION TIME CONSTANTS)		
	IEC-1968	NAB-1965	NAB-1975
3.75 ips 9.53 cm/s	50 Hz; 1800 Hz (3180 us; 90 us)	50 Hz; 1800 Hz (3180 us; 90 us)	- (-)
7.5 ips 19.05 cm/s	0 Hz; 2240 Hz (∞ ; 70 us)	50 Hz; 3150 Hz (3180 us; 50 us)	0 Hz; 3150 Hz (∞; 50 us)
15 ips 38.10 cm/s	0 Hz; 4500 Hz (∞ ; 35 us)	50 Hz; 3150 Hz (3180 us; 50 us)	- (-)
30 ips 76.2 cm/s	0 Hz; 9000 Hz (∞ ; 17.5 us)	AES 1971 0 Hz; 9000 Hz (∞ ; 17.5 us)	- (-)

4.2.1.4
Magnetic reference flux

A tape recorded with reference level should produce operating level on the output in play mode.

The following standard settings are made at the factory:

OPERATING LEVEL (0 VU) nWb/m	PEAK RECORDING LEVEL (+ 6 VU) nWb/m
320 (257 @ 3.75 ips)	640 (514 @ 3.75 ips)

4.2.1.5
Calibration tapes

Calibration tapes are used for aligning the reproduce path of tape recorders. Such tapes are magnetized across their full width. A separate tape is used for each speed.

CAUTION

To prevent unintentional erasure of valuable tapes, all channels should be switched to SAFE while adjustments are being made! On recorders without SAFE button, set the two code switches JS 01 and JS 02 of the PERIPHERY CONTROLLER to 0. (also refer to 4.2.9.2).

Calibration tapes are divided into the following test sections:

Reference level test section:

(Reference flux = 320 nWb/m for 7.5, 15, and 30 ips, 257 nWb/m for 3.75 ips) should produce operating level on the output in play mode.
The output level is adjusted to the required operating level during the reproduction of this test section that has a length of approx. 60 to 180 s.
NAB calibration tapes with a reference flux of 200 nWb/m should yield an output level of -4 VU (reference level - 10 dB).

Reference frequencies: 333 Hz or 500 Hz at 3.75 ips, 1 kHz at 7.5 ips through 30 ips (there are also NAB calibration tapes with a reference frequency of 700 Hz).

Azimuth alignment test section:

For adjusting the vertical alignment of the reproduce head gap. This test section is divided into a short segment containing the reference frequency (for coarse adjustment) and a long segment with 10 kHz for fine-adjustment. NAB calibration tapes may be formatted differently. The level of this section is normally 10 dB below the operating level.

The head is aligned to maximum output voltage with the azimuth adjustment screw.
Important: If significant changes in the reproduce head azimuth are made, other voltage maxima with lower levels occur!

With correct equalization of the reproduce amplifier, the reproduce level is identical for recordings with reference frequency and with 10 (8; 16) kHz.

Frequency response test section:

For determining and adjusting the reproduce response at specific frequencies. NAB calibration tapes exist that contain frequencies other than those listed in the following table.

REFERENCE TAPE	CCIR				NAB			
TAPE SPEED cm/s; ips	9.5	19	38	76	3.75	7.5	15	30 (AES)
REFERENCE LEVEL SECTION: REF. FREQUENCY REFERENCE FLUX	333 Hz 257	1 kHz 320 nWb/m			500 Hz 200	1 kHz (700 Hz) 200 nWb/m		
AZIMUTH ALIGNMENT SECTION: (-10 dB)	333 Hz 10 kHz	1 kHz 10 kHz			250 Hz 4 kHz 8 kHz	500 (700) Hz 8 kHz 16 kHz		
FREQUENCY RESPONSE SECTION: (CCIR: -20 dB) (NAB: -10 dB)	333 Hz 31.5 40 63 125 250 500 1 kHz 2 4 6.3 8 10 12.5 14 16 333 Hz	1 kHz 31.5 Hz 40 63 125 250 500 1 kHz 2 4 6.3 8 10 12.5 14 16 18 1 kHz			31.5 Hz 63 125 250 500 1 kHz 2 4 5 6.3 8 10 500 Hz	31.5 Hz 63 125 250 500 1 kHz 2 4 8 10 12.5 16 20 1 kHz		

4.2.1.6
Preparatory steps

Set all code switches of the PERIPHERY CONTROLLER to the correct setting (refer to Section 4.2.9.2!) before starting with the calibration.

Line level:

Adjust required level:

OPERATING LEVEL	PEAK RECORDING LEVEL	JS 6	JS 5
0 dBm	6 dBm	0	0
4 dBm	10 dBm	0	1
8 dBm	14 dBm	1	0
10 dBm	16 dBm	1	1

If a different value is desired:
Select next value and calibrate the line level with the level adjustments outlined below.

Checking the output level and the VU-meter:

Connect AF generator to the line input of channel 1 and feed in 1 kHz with operating level.
Connect AF millivoltmeter to line output channel 1 and load the output with 600 ohms (standard) or 200 ohms (minimum).

Switch recorder on and press the INP button of channels 1 and 2. Release all UNCAL buttons (calibrated level).

Adjust output level to operating level with the line amplifier trimmer accessible from the front.

Checking the VU-meter indication:

- VU indication: Operating level should result in a reading of 0 VU.
- PPM indication: Operating level should result in a reading of -6 (0 for reference level)

Correct the VU-meter reading with the trimmer potentiometer located on the back of the VU-meter amplifier.

On stereo recorders repeat the checks for channel 2 in the same sequence.

Equalization:

Select the required equalization on the master panel (CCIR or NAB).

If the same calibration data (level, frequency response, bias) are desired for both types of equalization, proceed as follows:

- Select preferred equalization (master panel).
- Adjust and check all audio parameters according to the instructions.
- Set code switch 7: JS 7 = 1
- Read out and reload all previously entered parameters. The same parameters are now stored for both equalizations.

The equalization time constants can be changed selectively for special situations. In this case it is essential to set the code switch 7 to the off position (JS 7 = 0)!

Tape bias

Set bias selector to the desired position or program it according to 4.2.9.1.

NOTE: Repeat the reproduce and record adjustments step-by-step for the second tape formulation.

4.2.1.7
Input keyboard

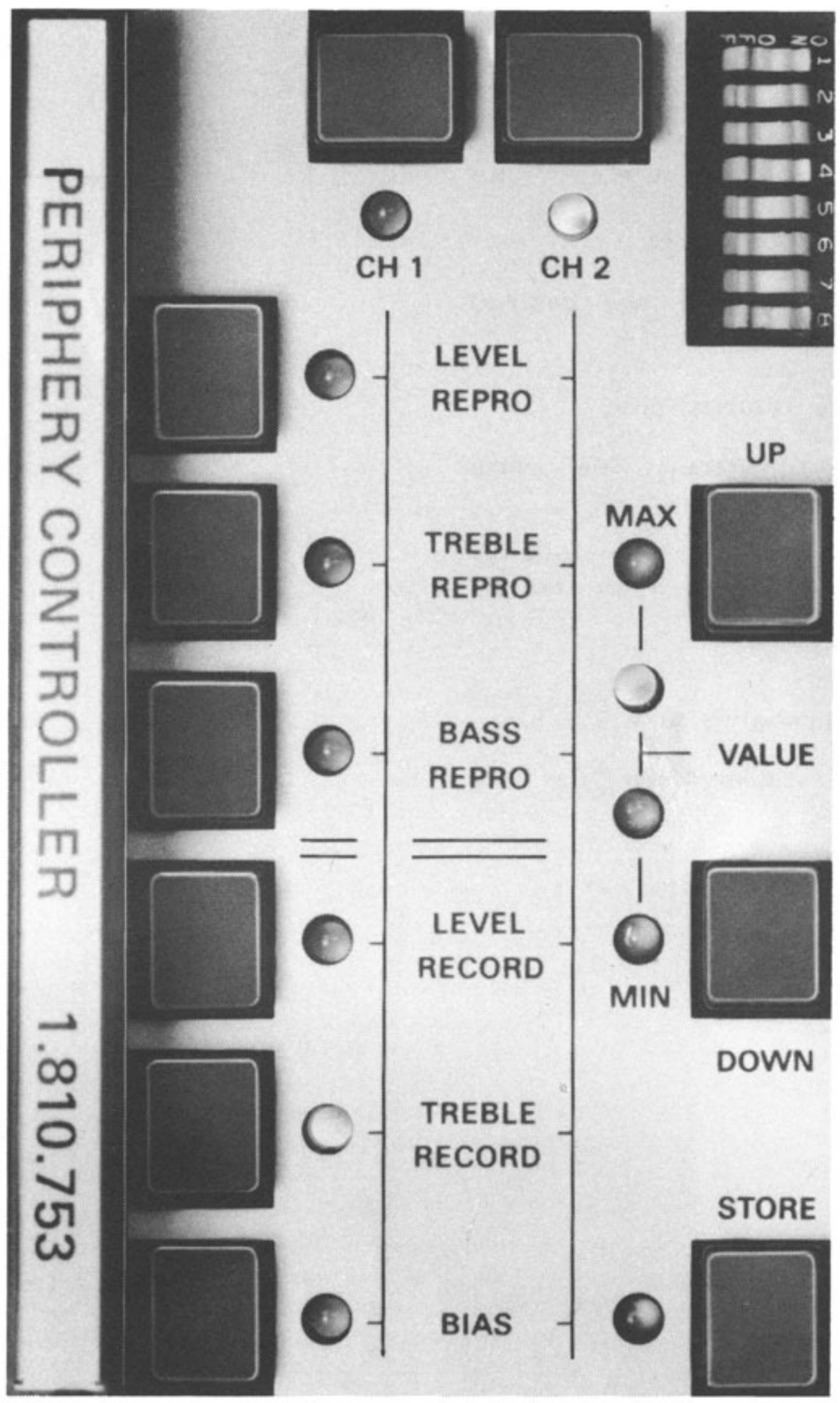

Set code switch 8 on: JS 8 = 1.

This turns on all status indicator lamps (LED). If, for example, the reproduce level for channel 1 is to be adjusted, press button CH1 first, followed by LEVEL REPRO. The corresponding status indicator lamps turn on and the tape timer displays e.g. AA 83 (LCD) or AAA83 (LED display).

- AA(A) for audio adjustment
- 83 is the hexadecimal equivalent of 131 (decimal).

Readout of programmed value

The gain range of the various amplifiers can be adjusted in 255 steps between 0 and the maximum (corresponds to 256 discrete values).
Compared with a potentiometer, these 256 values correspond to the range between the cw and ccw stops.

The programmed value is indicated on the tape timer display. To conserve space it is displayed in hexadecimal format (00 for 0 and FF for 255).
A coarse reading can be obtained from the 4 indicator lamps (VALUE) on the input section.

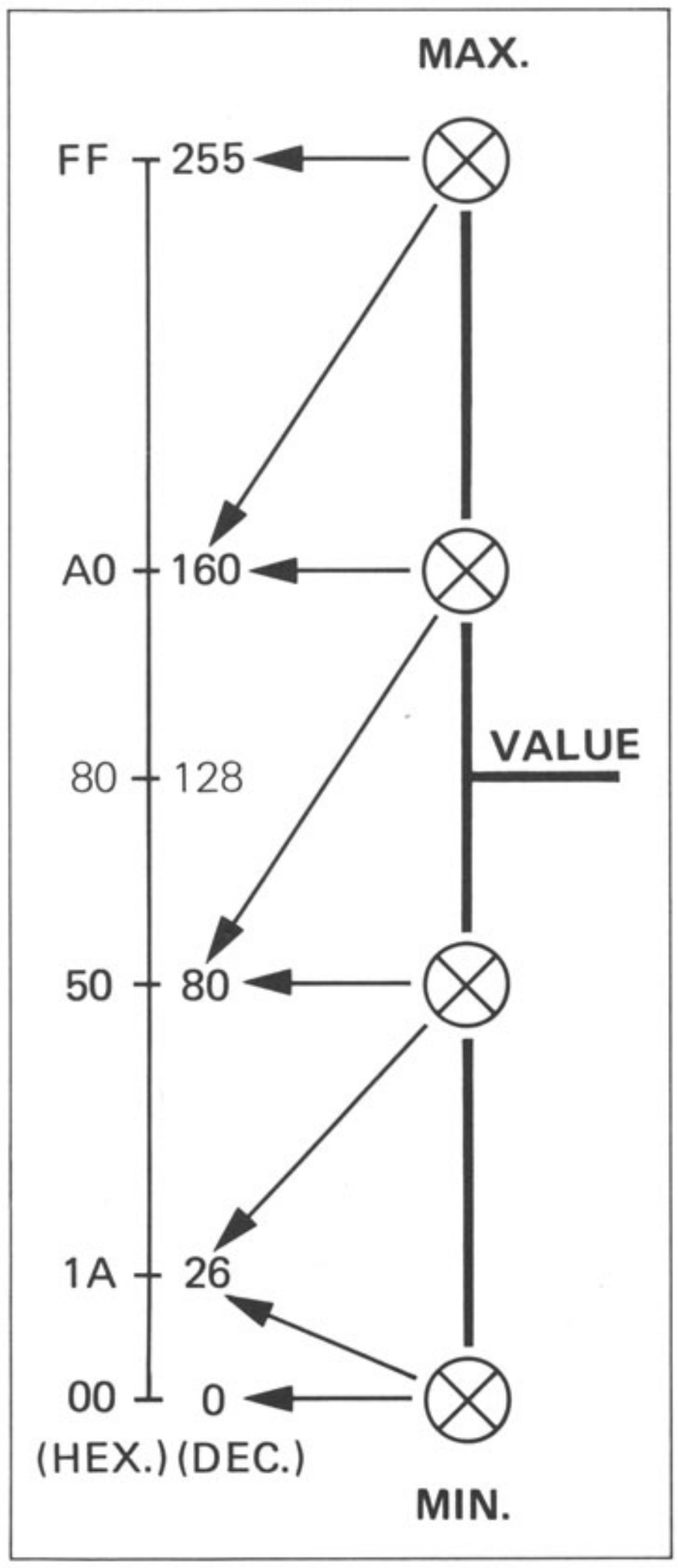

When the maximum value FF (255) is reached, the MAX lamp flashes, when 00 is reached, the MIN lamp flashes.

Examples of hexadecimal numbers:

DECIMAL	0	1	2	3	4	5	6	7	8	9	10	11	12	13	14	15
HEXADECIMAL	0	1	2	3	4	5	6	7	8	9	A	B	C	D	E	F

HEXADECIMAL	DECIMAL	% of FF (or 255, resp.)
1A	26	10
33	51	20
4D	77	30
66	102	40
80	128	50
99	153	60
B3	179	70
CC	204	80
E6	230	90

IMPORTANT

The hexadecimal values displayed should indicate to the user the range in which the corresponding amplifier is operating. No voltages can be derived from these numbers!

Modifying the parameters

Each time the UP key is pressed, the gain increases by 1/256th. It is decreased by 1/256th by pressing the DOWN key.

The UP or DOWN keys have the same effect as turning a potentiometer clockwise or counterclockwise.

If the UP or DOWN key are pressed continuously, the gain is varied in consecutive steps.

Example:

Push	Display
	AA(A)3C
UP	AA(A)3D
UP	AA(A)3E
UP	AA(A)3F
UP	AA(A)40
UP	AA(A)41
DOWN	AA(A)40
DOWN	AA(A)3F

In contrast to the adjustment with potentiometers, the original value stored in RAM can be reproduced exactly at any time by simply pressing the corresponding parameter key (e.g. LEVEL REPRO).

Storing the parameters

When the desired value has been reached (e.g. operating level 10 dBm = 2.5 V) it can be stored in RAM.
Press STORE key: the STORE indicator lamp turns on briefly to acknowledge that the parameter has been stored.

The hexadecimal values representing the amplifier setting can be entered on a log for comparison purposes.

Example:

A810 No.: 5 EQUALIZATION:		TAPE SPEED 15 ips		TAPE SPEED 7.5 ips		REMARKS
		CH1	CH2	CH1	CH2	
REPRO	LEVEL	7E	70	80	7A	
	TREBLE	A1 1)	9C	9F	9D	1) 6.3 kHz : -1 dB
	BASS	85	77 2)	79	7D	2) 125 Hz : +1 dB
	EQUAL.	44	44	87	87	
RECORD	LEVEL	8E	8C	90	7F	
	TREBLE	83	79	7A	7E	
	BIAS	88	90	80	8B	
	EQUAL.	BA	BA	82	82	
SYNC	LEVEL	73	75	84	8A	
	TREBLE	A0	98	9C	9F	
	BASS	6B	6A	59	61	
	EQUAL	44	44	87	87	

ERROR MESSAGE EE02 (LCD) or EEE02 (LED)

If the error message EE(E)02 is displayed during calibration, an error has been detected in the RAM or its power supply.

The standard parameters stored in PROM will automatically be loaded.
"Degraded operation" is still possible (refer to Section 2.7).
The recorder should be checked out by the nearest service agency as soon as possible.

4.2.2
Reproduce adjustments

4.2.2.1
Preparatory steps

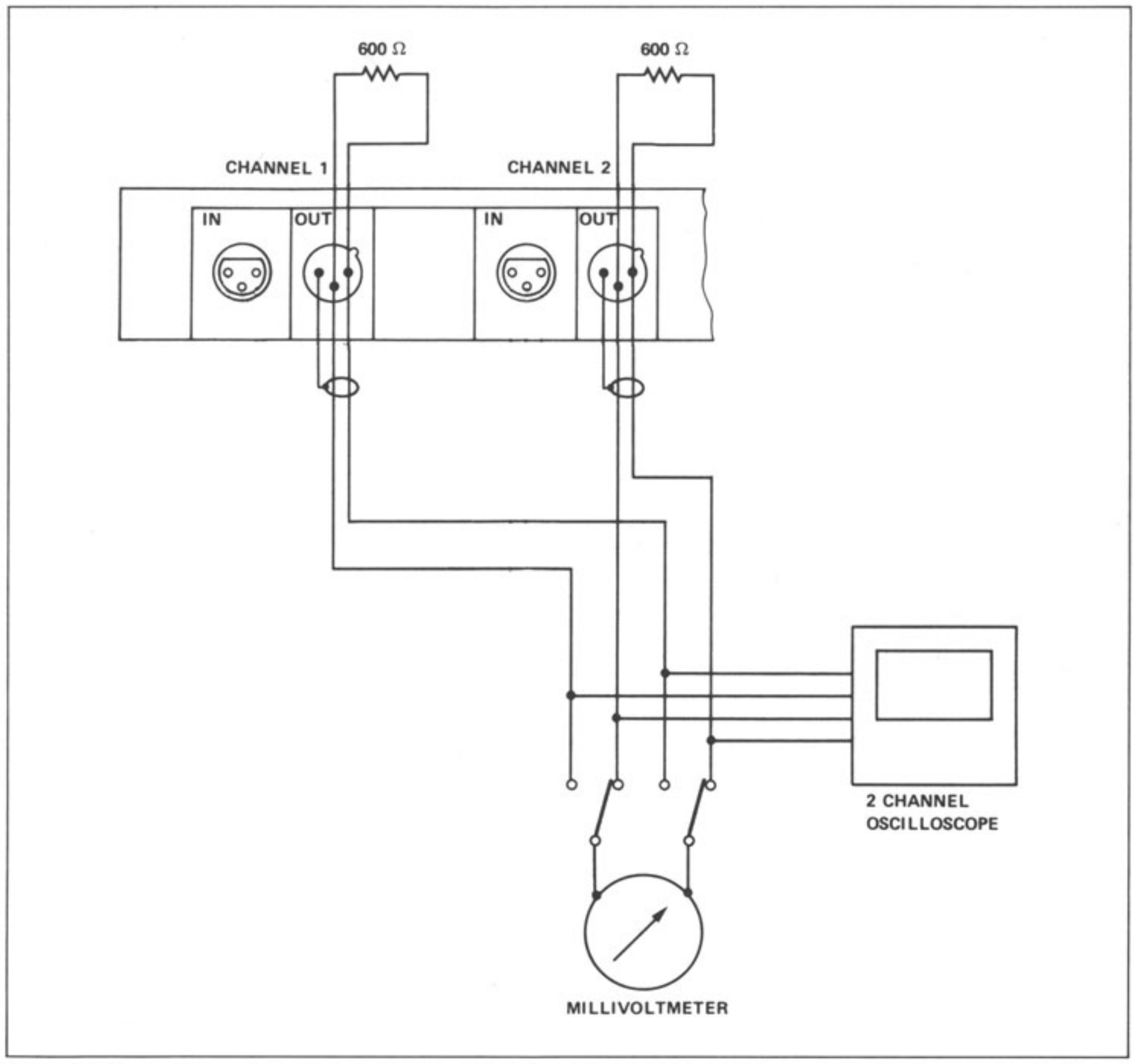

Connect AF millivoltmeter to line output channel 1. Load the line outputs for all measurements with 600 ohms (or 200 ohms, resp.)
Switch recorder on.
Select high tape speed.
Press SAFE and REP buttons of channels 1 and 2. Release all UNCAL buttons (calibrated level).
Mount calibration tape of the corresponding equalization and speed, and spool forward to the "REFERENCE LEVEL" section.

4.2.2.2
Reproduce level adjustment

Press CH1 and LEVEL REPRO on the input keyboard.
Start recorder in play mode.
Read out reproduce level and adjust it to the desired operating level by pressing the UP or DOWN key.
Press STORE.

On stereo recorders, connect the millivoltmeter to line output channel 2. Press CH2 and LEVEL REPRO. Adjust to the desired operating level by pressing UP or DOWN. Press STORE.

4.2.2.3
Azimuth alignment of the reproduce head

Spool calibration tape forward to the "AZIMUTH ALIGNMENT" section. The level of this section is approximately 10 dB below that of the reference level section.
Connect millivoltmeter to line output channel 1.
Start recorder in play mode.

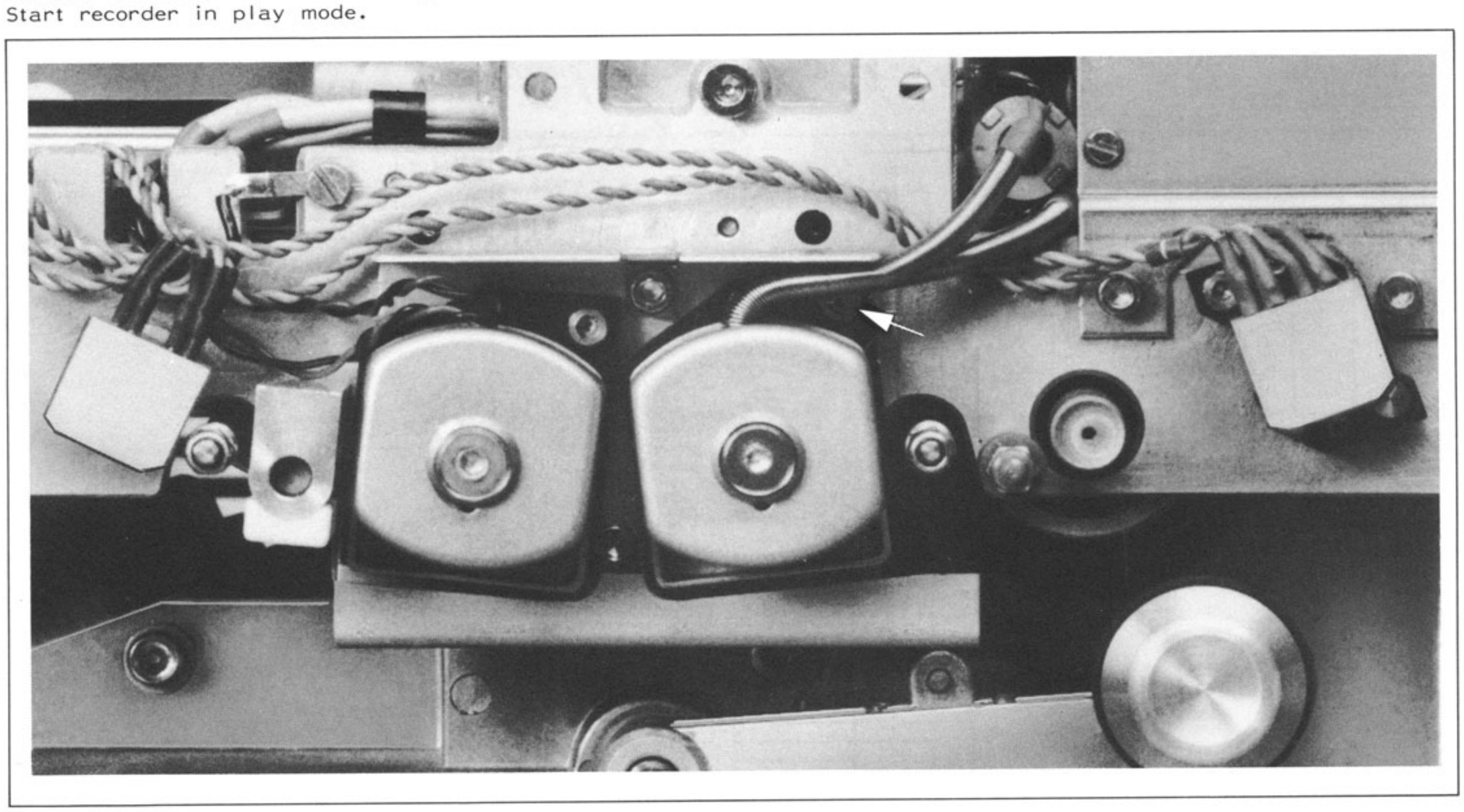

The coarse adjustment is made during the reproduction of the reference frequency. The fine adjustment is made during the reproduction with 10 kHz (8 or 16 kHz).
The alignment of the reproduce head is varied with the azimuth adjustment screw until the maximum output voltage and simultaneously the lowest level fluctuations are attained.

Stereo recorders are subsequently adjusted for minimum phase difference of the output signal, between channel 1 and 2 with the aid of an oscilloscope and by further correction with the azimuth adjustment screw of the reproduce head.

Important:

Always adjust to maximum level first and then to minimum phase difference!

Checking the level:

Rewind calibration tape to "REFERENCE LEVEL" section and start recorder in play mode. Check level of channels 1 and 2 and correct if necessary:

- CH1 (CH2), LEVEL REPRO
- UP or DOWN
- STORE.

4.2.2.4
Frequency response adjustment

Spool calibration tape forward to "TREBLE FREQUENCY RESPONSE" test section (16 kHz for 30 ips, 14 kHz for 15 ips, 12.5 kHz for 7.5 ips). The level of this section is approx. 20 dB (CCIR) below that of the reference level section. Connect millivoltmeter to line output channel 1.

Press CH1 and TREBLE REPRO on input keyboard.
Start recorder in play mode.
Adjust to optimum frequency response with UP or DOWN.
Press STORE.

On stereo recorders, connect the millivoltmeter to line output channel 2. Press CH2 and TREBLE REPRO. Adjust to optimum frequency response with UP or DOWN, Press STORE.

Rewind calibration tape to "FREQUENCY RESPONSE 63 Hz" test section. The level of this section is approx. 10 dB lower than that of the reference level section.
Connect millivoltmeter to line output channel 1.

Press CH1 and BASS REPRO on input keyboard.
Start recorder in play mode.
Adjust for optimum frequency response with UP or DOWN,
Press STORE.

On stereo recorders connect millivoltmeter to line output channel 2. Press CH2 and BASS REPRO. Adjust for optimum frequency response with UP or DOWN. Press STORE.

Note:

Strong fringing effects can occur at low frequencies if mono calibration tapes are used for the reproduce adjustment of stereo recorders. To ensure that a linear reproduce frequency response is attained, the reproduce adjustment of the bass frequencies must either be repeated with the record adjustment or if no record adjustments are planned, a calibration tape with correct track separation should be used!

The reproduce frequency response can be adjusted for special situations by slightly varying the time constant of the reproduce equalization.
This is accomplished as follows:

- Set program switch 7 off: JS7 = 0.
- Press CH1 (CH2).
- Hold down TRANS <REDUCED> continuously.
- Press TREBLE REPRO and release both keys. TREBLE REPRO status indicator lamp flashes.

- The time constant can be increased by pressing UP, i.e. the transition frequency is shifted toward the lower frequencies.
- The time constant can be decreased by pressing DOWN, i.e. the transition frequency is shifted toward the higher frequencies.
- Press STORE.

THEORETICAL EQUALIZATION ADJUSTMENTS

TIME CONSTANT {us}	TRANSITION FREQ. +/- 3 dB {kHz}	REPRODUCE HEX. VALUE
120	1.326	E5
90	1.768	A3
70	2.273	87
50	3.150	61
35	4.547	44
17.5	9.094	26

4.2.2.5
Adjustments for the slow tape speed

The adjustments for the SLOW tape speed are basically the same as described in 4.2.2.2 through 4.2.2.4:

- Select slow tape speed
- Select applicable equalization and tape bias
- Mount corresponding calibration tape.

Exceptions:

The reproduce frequency response is calibrated with different frequencies, depending on the tape speed:

	ADJUSTMENT FOR	
	TREBLE REPRO	BASS REPRO
ips	kHz	Hz
3.75	8	60
7.5	12.5	60
15	14	60
30	16	60

4.2.3
Record Adjustments

4.2.3.1
Preparatory steps

Mount new (or practically new) unrecorded tape.

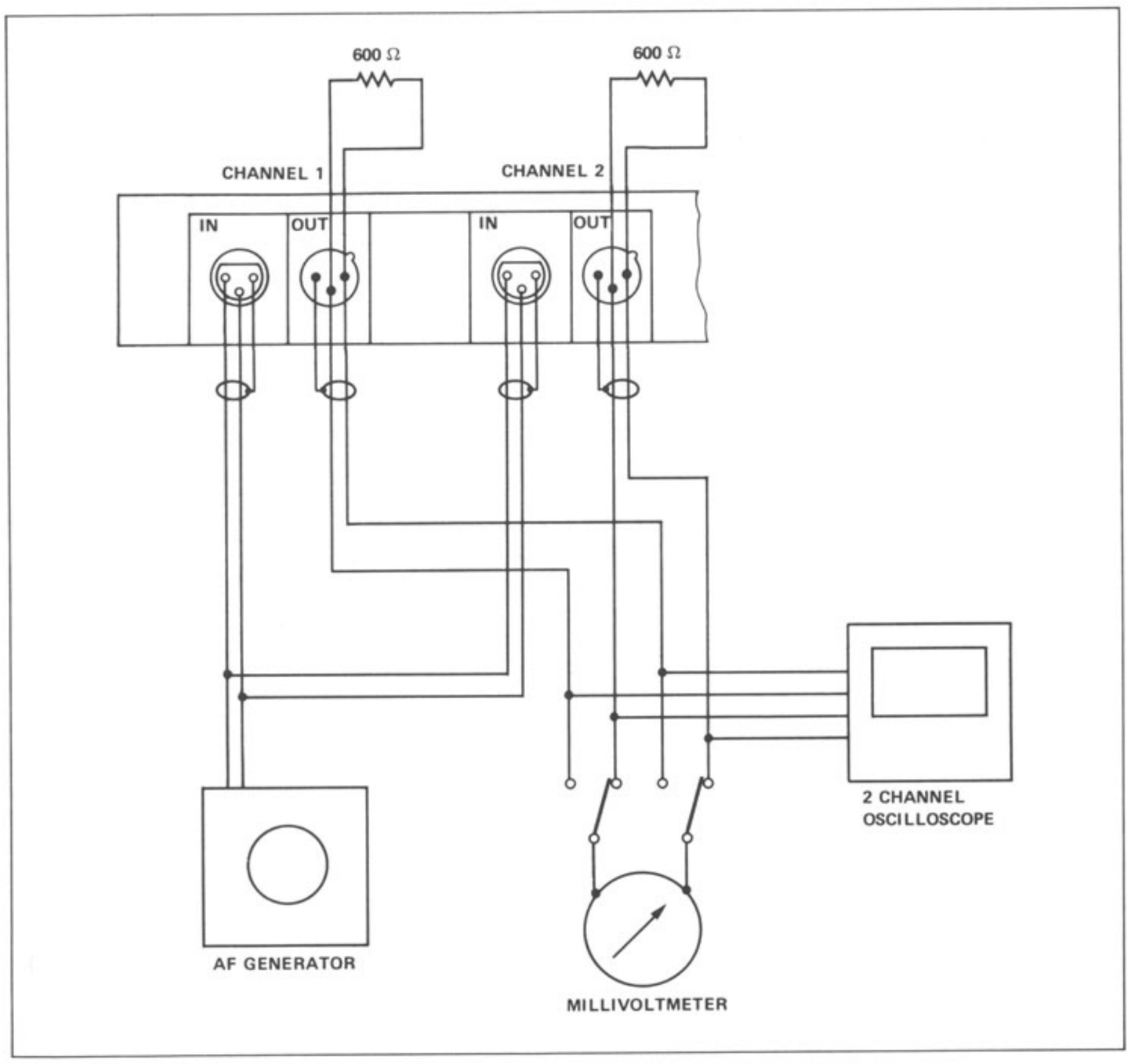

Connect AF generator with 1 kHz operating level to line input channel 1 (channels 1 + 2 on stereo models) and connect millivoltmeter to line output channel 1. A reference frequency of 700 Hz can be applied when aligning to NAB standards.

Switch recorder on and press READY and REP buttons of channels 1 and 2. Release all UNCAL buttons (calibrated line level). Select tape speed 7.5 ips or preferred studio speed.

4.2,3.2
Record level preadjustment

Press CH1 and LEVEL RECORD on input keyboard.
Recall output level and press UP or DOWN key for adjusting to operating level.
Press STORE.

On stereo recorders connect millivoltmeter to line output channel 2. Press CH2 and LEVEL RECORD keys. Adjust output to operating level by pressing UP or DOWN.
Press STORE.

4.2.3.3
Aligning the azimuth of the record head

Set AF generator to 10 kHz and decrease level by 20 dB.
Connect millivoltmeter to line output channel 1.
Start machine in record mode.

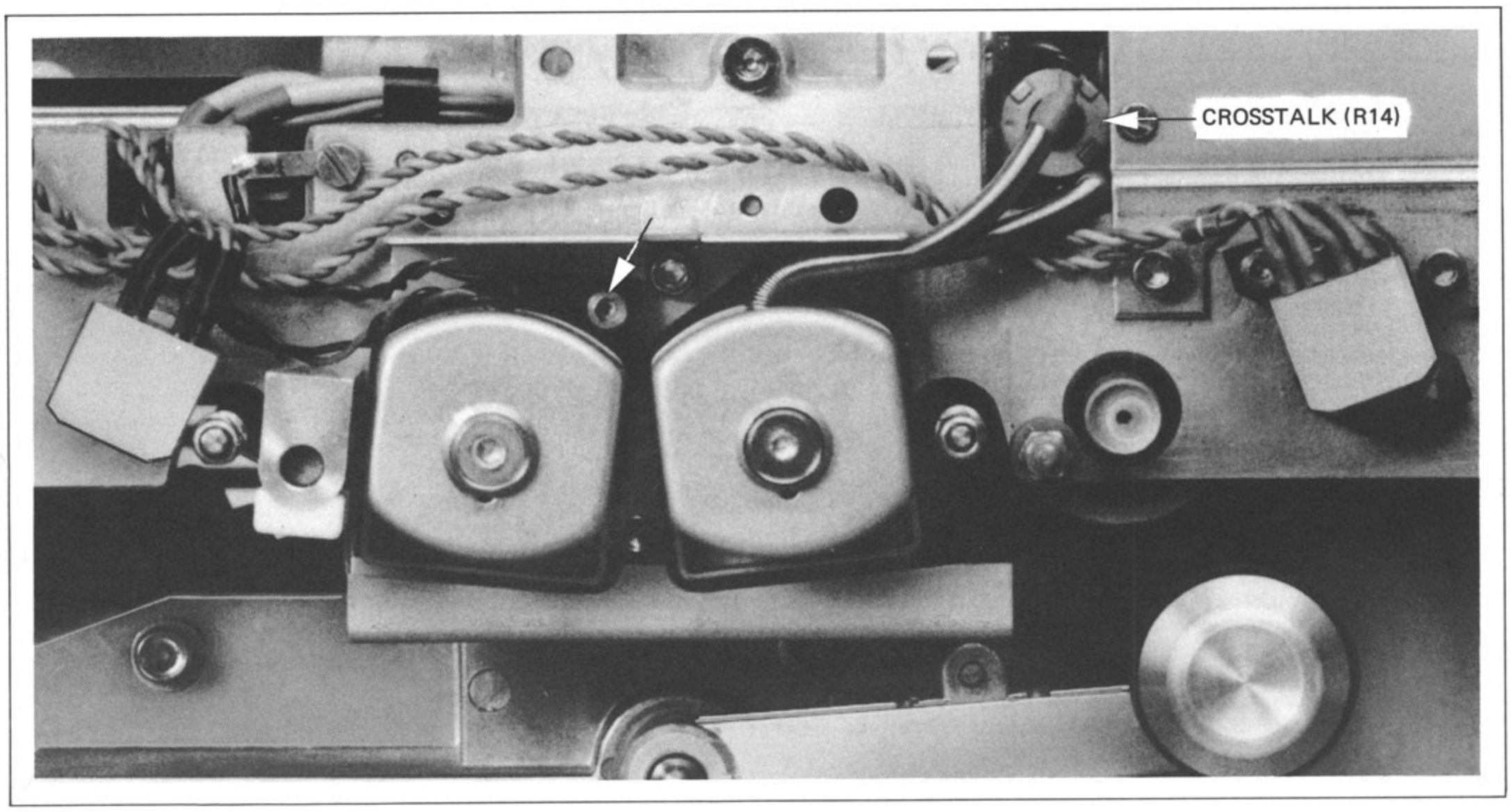

Correct the azimuth of the record head by turning the azimuth alignment screw until the highest output voltage and simultaneously the lowest level fluctuations are attained.

If significant correction of the azimuth alignment was necessary, repeat the record level preadjustment (Section 4.2.3.2)!

4.2.3.4
Bias adjustment

Set AF generator to 10 kHz and the level 20 dB below operating level.
Connect millivoltmeter to line output channel 1.
Press CH1 and BIAS on input keyboard.
Start machine in record mode.
Continue to press DOWN key until the MIN lamp flashes.
Search the maximum output voltage with UP and write down this value.
Continue with UP until the value Δ U (dB) specified in the BIAS table is reached. This value depends on the tape formulation and the tape speed!

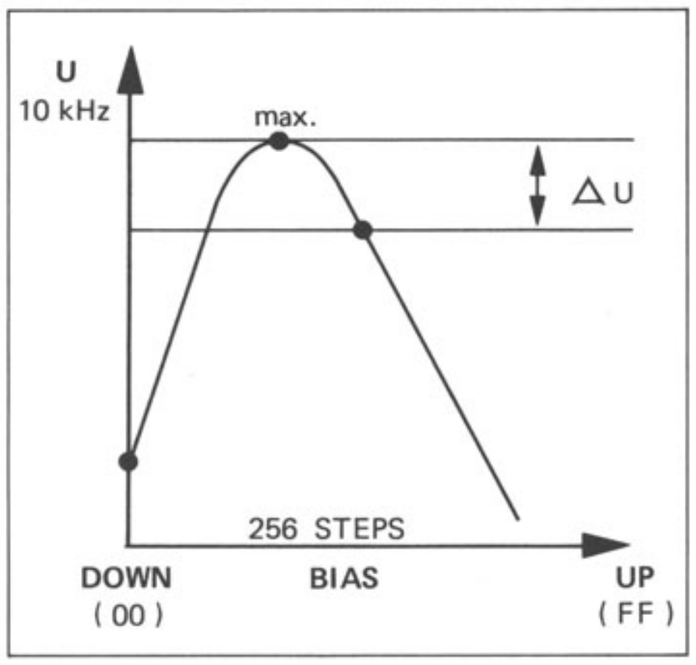

Refer to BIAS table at the end of this Section!
Press STORE.

On stereo recorders connect the millivoltmeter to line output channel 2. Press CH2 and BIAS. Adjust bias in the same way as described for channel 1.
Press STORE.

4.2.3.5
Azimuth alignment STEREO

Stereo recorders are adjusted for minimum phase difference of the output signals on channels 1 and 2 by carefully turning the azimuth alignment screw of the record head.

4.2.3.6
Record level adjustment

Set AF generator to 1 kHz (700 Hz) and operating level.
Connect millivoltmeter to line output channel 1.
Press CH1 and LEVEL RECORD on input keyboard.
Start machine in record mode.
Adjust to operating level by pressing UP or DOWN.
Press STORE.

On stereo recorders connect the millivoltmeter to line output channel 2. Press CH 2 and LEVEL RECORD. Adjust output level to operating level with UP or DOWN.
Press STORE.

4.2.3.7
Frequency response adjustment

Set AF generator to operating level - 20 dB.
Connect millivoltmeter to line output channel 1.

Press CH1 and TREBLE RECORD on input keyboard.
Start machine in record mode.
Adjust to optimum frequency response (upward of 1 kHz) by pressing UP or DOWN.
Press BASS REPRO key and adjust to optimum frequency response (up to 1 kHz) by pressing UP or DOWN.
Press STORE.

Stereo recorders:
Connect millivoltmeter to line output channel 2.
Press CH2 and TREBLE RECORD on input keyboard.
Start machine in record mode.
Adjust to optimum frequency response (upward of 1 kHz) by pressing UP or DOWN.
Press STORE.

Press BASS REPRO and adjust to optimum frequency response (up to 1 kHz) by pressing UP or DOWN.
Press STORE.

EQUALIZATION	CCIR			NAB		
TAPE SPEED cm/s; ips	9.5	19	38	76	3.75	7.5	15	30 (AES)
FREQUENCY RESP. ADJUSTMENT (-20 dB)	333 Hz 31.5 40 63 125 250 500 1 kHz 2 4 6.3 8 10 12.5 14 16 333 Hz	1 kHz 31.5 Hz 40 63 125 250 500 1 kHz 2 4 6.3 8 10 12.5 14 16 18 1 kHz			31.5 Hz 63 125 250 500 1 kHz 2 4 5 6.3 8 10 500 Hz	31.5 Hz 63 125 250 500 1 kHz 2 4 8 10 12.5 16 20 1 kHz		

In special situations it is possible to correct the over-all frequency response by slightly shifting the time constant of the record equalization.
This is accomplished as follows:

- Set code switch 7 to off position: JS7 = 0.
- Press CH1 (CH2).
- Hold down TRANS <REDUCED>.
- Press TREBLE RECORD and release both keys. The TREBLE RECORD lamp flashes.
- The time constant can be decreased by pressing UP, i.e. the transition frequency is shifted toward the higher frequencies.
- The time constant can be increased by pressing DOWN, i.e. the transition frequency is shifted toward the lower frequencies.
- Press STORE.

THEORETICAL EQUALIZATION ADJUSTMENTS		
TIME CONSTANT {us}	TRANSITION FREQ. +/- 3 dB {kHz}	RECORD HEX. VALUE
120	1.326	0E
90	1.768	4C
70	2.273	75
50	3.150	82
35	4.547	BA
17.5	9.094	DE

4.2.3.8
Cross talk adjustment (2-channel and stereo models only)

Connect AF generator (operating level, 1 kHz) to line input channel 1 and connect millivoltmeter to line output channel 2. Switch both channels to READY and start machine in record mode.
Adjust to minimum cross talk with the aid of the CROSS TALK potentiometer (preamplifier on the headblock, R14, illustrated on page 4/23).
Repeat the same measurement with interchanged channels. If pronounced differences occur, an optimum value has to be found for both channels.

4.2.4
Sync adjustments

Because sync reproduction is not supported for 3.75 ips, all parameters should be left at 00 for this speed.

4.2.4.1
Preparatory steps

Switch recorder off and wait 5 seconds.
Set jumper on REPRODUCE AMPLIFIER to NARROW (or to WIDE if wider frequency response is desired). Also refer to 4.2.9.4.

Connect millivoltmeter to line output channel 1.
Switch recorder on.
Select tape speed, bias, and equalization.
Press SAFE and SYNC buttons of channels 1 and 2.
Release all UNCAL buttons (calibrated level).
Mount calibration tape of the corresponding speed and spool forward to the "REFERENCE LEVEL" section.

4.2.4.2
Reproduce level adjustment

Press CH1 and LEVEL REPRO on the input keyboard.
Start recorder in play mode.
Read out reproduce level and adjust it to the desired operating level by pressing the UP or DOWN key.
Press STORE.

On stereo recorders, connect the millivoltmeter to line output channel 2. Press CH2 and LEVEL REPRO. Adjust to the desired operating level by pressing the UP or DOWN key. Press STORE.

4.2.4.3
Frequency response adjustment

Spool calibration tape forward to the "FREQUENCY RESPONSE" section. The level of this section is approximately 10 dB below that of the reference level section.
Connect millivoltmeter to channel 1.

Press CH1 and TREBLE REPRO on input keyboard.
Start recorder in play mode.

TAPE SPEED ips	TREBLE EQUALIZATION (TREBLE SYNC)
7.5	8 kHz
15	12.5 kHz
30	12.5 kHz

Adjust for optimum frequency response by pressing UP or DOWN.
Press STORE.

On stereo recorders, connect millivoltmeter to line output channel 2. Press CH2 and TREBLE REPRO. Adjust to optimum frequency response by pressing UP or DOWN.
Press Store.

Rewind calibration tape to test section "FREQUENCY RESPONSE 63 Hz". The level of this section is approximately 10 dB below that of the reference level section.
Connect millivoltmeter to line output channel 1.

Press CH1 and BASS REPRO on input keyboard.
Start recorder in play mode.
Adjust to optimum frequency response by pressing UP or DOWN.
Press STORE.

On stereo recorders connect the millivoltmeter to line output channel 2. Press CH2 and BASS REPRO. Adjust to optimum frequency response by pressing UP or DOWN.
Press STORE.

Note:

Strong fringing effects can occur at low frequencies if mono calibration tapes are used for the reproduce adjustments of stereo recorders.
To ensure that a linear reproduce frequency response is attained, a calibration tape with the correct track separation should be used!

The reproduce frequency response can be adjusted for special situations by slightly varying the time constant of the reproduce equalization.
This is accomplished as follows:

- Set program switch 7 off: JS7 = 0.
- Press CH1 (CH2).
- Hold down TRANS <REDUCED> continuously.
- Press TREBLE REPRO and release both keys. TREBLE REPRO status indicator lamp flashes.
- The time constant can be increased by pressing UP, i.e. the transition frequency is shifted toward the lower frequencies.
- The time constant can be decreased by pressing DOWN, i.e. the transition frequency is shifted toward the higher frequencies.
- Press STORE.

THEORETICAL EQUALIZATION ADJUSTMENTS

TIME CONSTANT {us}	TRANSITION FREQ. +/- 3 dB {kHz}	RECORD HEX. VALUE
120	1.326	E5
90	1.768	A3
70	2.273	87
50	3.150	61
35	4.547	44
17.5	9.094	26

4.2.4.4
Adjustments for the slow tape speed

The procedures described in 4.2.4.2 and 4.2.4.3 also apply to the adjustment for the SLOW tape speed:

- Select slow tape speed
- Change over equalization and bias, if necessary
- Mount corresponding calibration tape

4.2.5
Time code reproduction

No electrical adjustments are required for the time code reproduction.

Only mechanical adjustment of the left-hand and the right-hand code head may be necessary. Because the code track is very narrow (0.4 mm), accurate alignment of the heads is essential.

4.2.5.1
Preparatory steps

Check heads for contamination and clean, if necessary. Using a reference tape (in development; a tape prepared according to 4.2.6 can also be used as a temporary expedient), the azimuth can be adjusted to maximum reproduce level. However, the CODE READ/WRITE amplifier will have to be mounted on an extender board.

CAUTION

Switch recorder off and wait at least 5 seconds before inserting or unplugging circuit cards!

The reproduce signal is measured (preferably with an oscilloscope) at the input of the limiter on test point B.

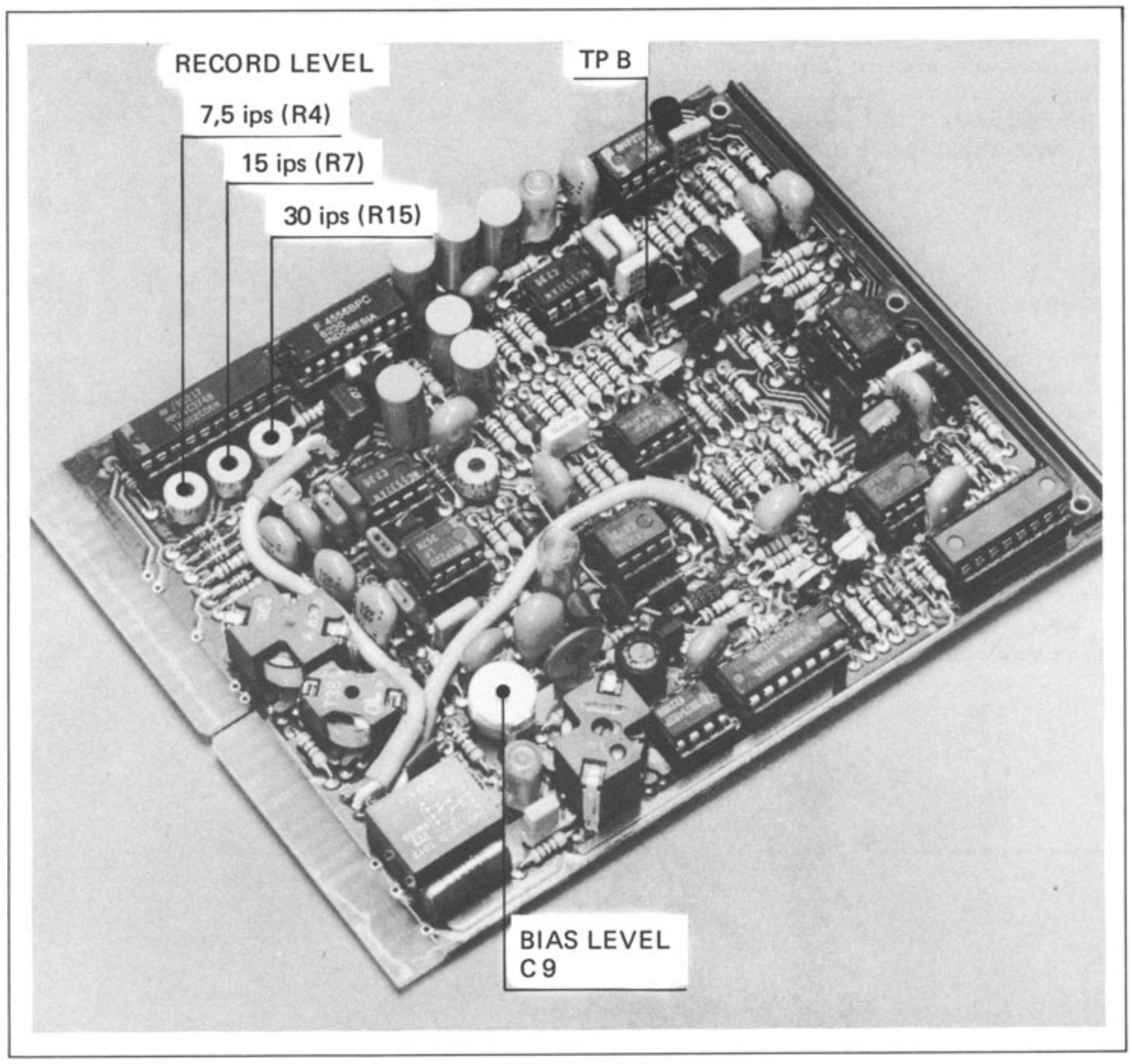

Mount time code reference tape, recording inhibited (SAFE).
Start recorder in play mode.

4.2.5.2
Checking the height of the heads

Visually check height, then measure the voltage on test point B.
Alternately press with your finger lightly from the top and the bottom against the tape edge on the left of the left-hand code head (audio erase head). The height is correct, if the voltage drops while the tape is being pressed.

Switch recorder to slowest rewinding speed by pressing TRANS < REDUCED> and <, then measure voltage on test point B.
Alternately press with your finger lightly from the top and the bottom against the tape edge on the right of the right-hand code head. The height is correct if the voltage drops while the tape is being pressed.

Realign the height, if the voltage rises when the tape is being pressed:
on the left-hand code head with the aid of shim rings;
on the right-hand code head by adjusting the swivel plate.

4.2.5.3
Tape guidance

The time code head (combination head) must be aligned perpendicularly to the plane of the tape path and the headface must be vertical. Lateral or forward/backward tilt detected after the height adjustment must be corrected by adjusting the swivel plate. Recheck the height adjustment, if necessary!

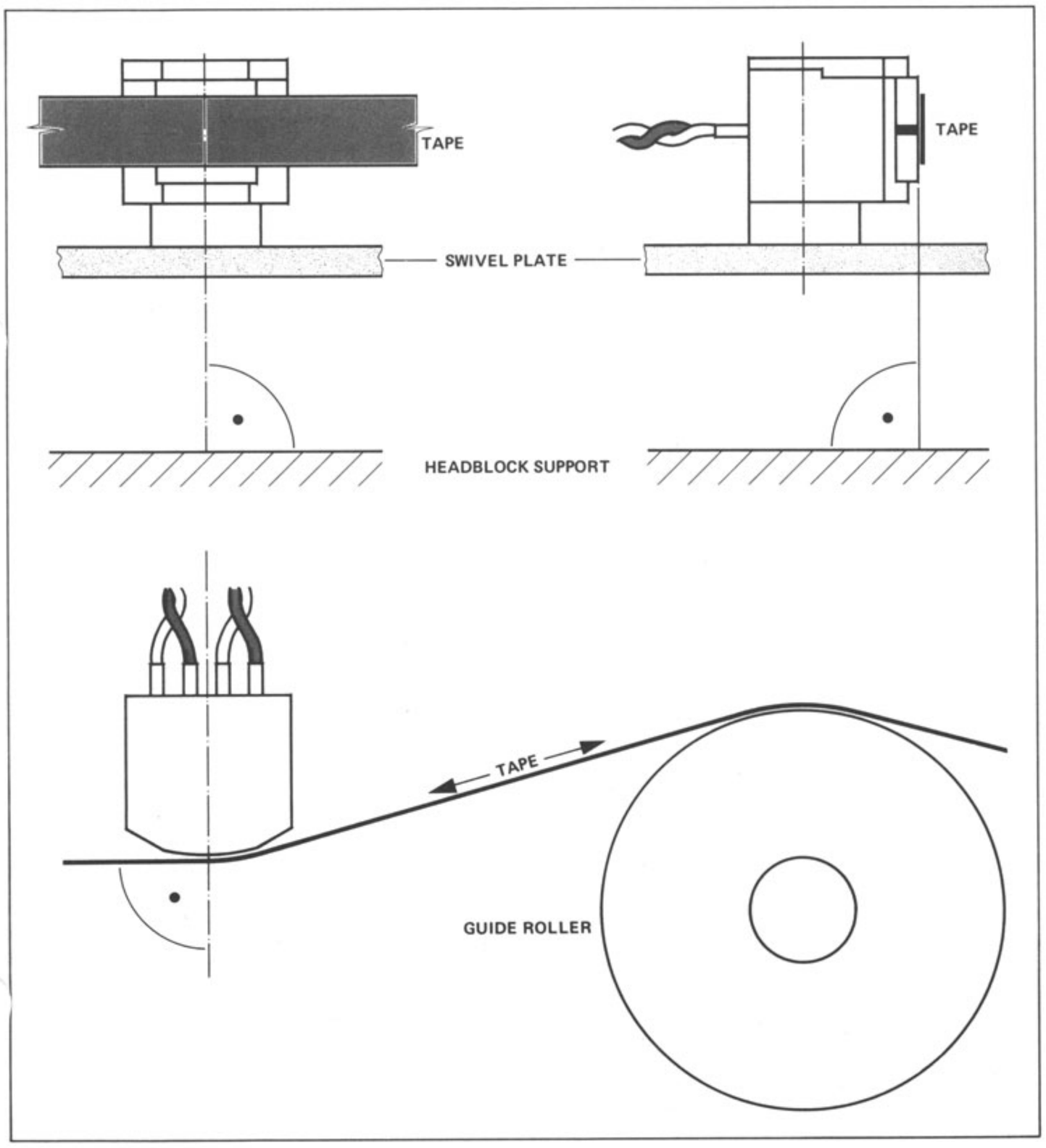

During spooling, the tape should be lifted perpendicularly to the center axis of the combination head when viewed from the top. Correct by rotating the combination head or by adjusting the tape lift pins.

4.2.6
Time code recording

4.2.6.1
Preparatory steps

Check the soundheads for contamination and clean, if necessary. Mount CODE READ/WRITE PCB on extender board.

CAUTION

Switch recorder off and wait at least 5 seconds before inserting or unplugging circuit cards!

Switch recorder on.
Select tape speed 15 ips (or preferred studio tape speed).

4.2.6.2
Adjusting the height of the right-hand code head (combination head)

Mount new (or practically new) unrecorded tape; set bias trimmer C9 and record level trimmers R4, R7, and R15 to their respective middle position. Select tape speed 7.5 ips. Connect square-wave generator 2 Vpp, 1 kHz, to all three inputs and record a tape section of approx. 10 to 20 sec. duration. Apply iron suspension to approx. 10 mm of the recorded tape, oxide coating facing up. After the suspension has dried, measure the track symmetry with the aid of a measuring magnifier. Adjust the height of the head if the deviation exceeds ±0.05 mm. Repeat recording and measurement until track symmetry is achieved.

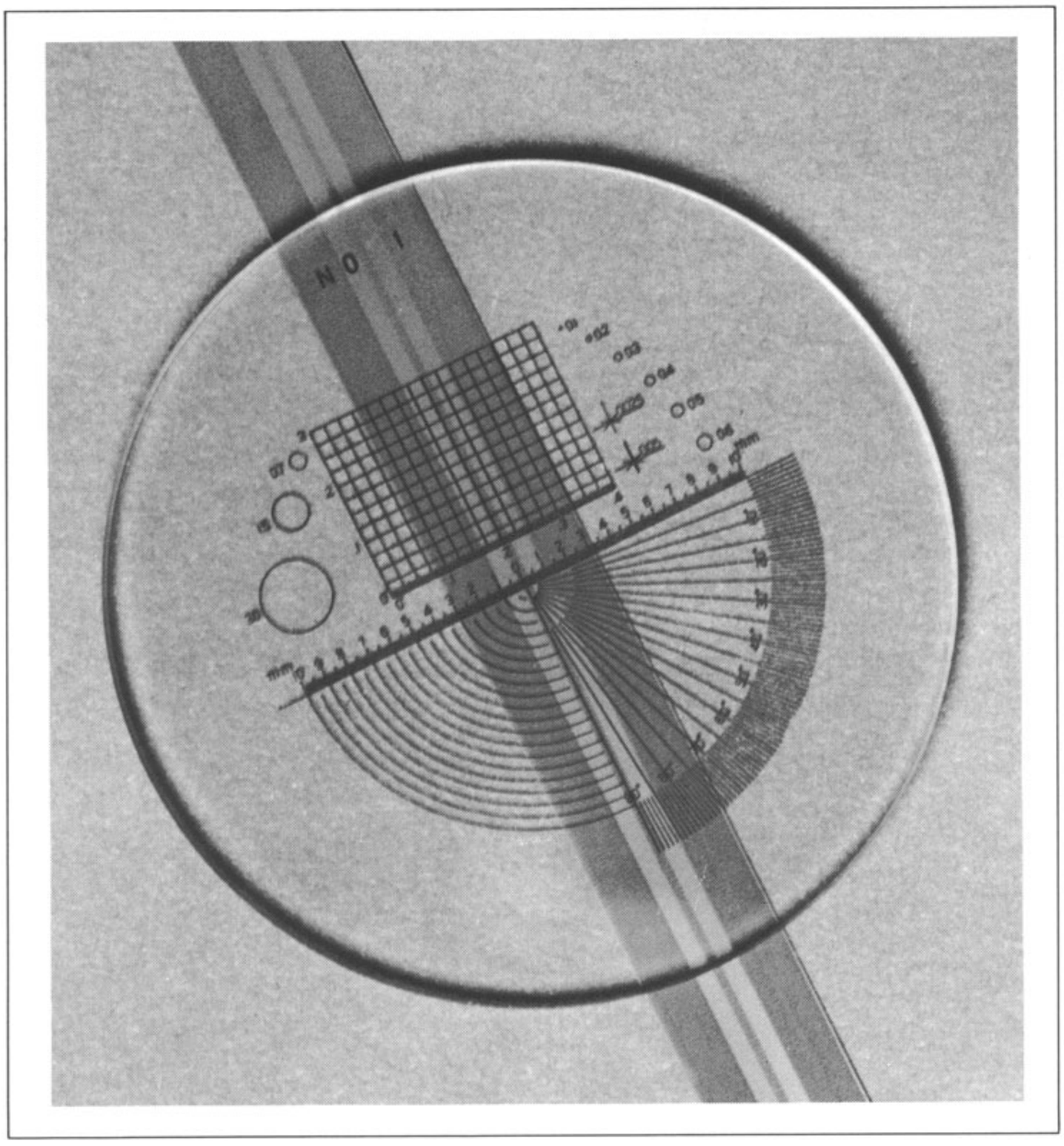

These measurements can also be performed with a "TAPE VIEWER".

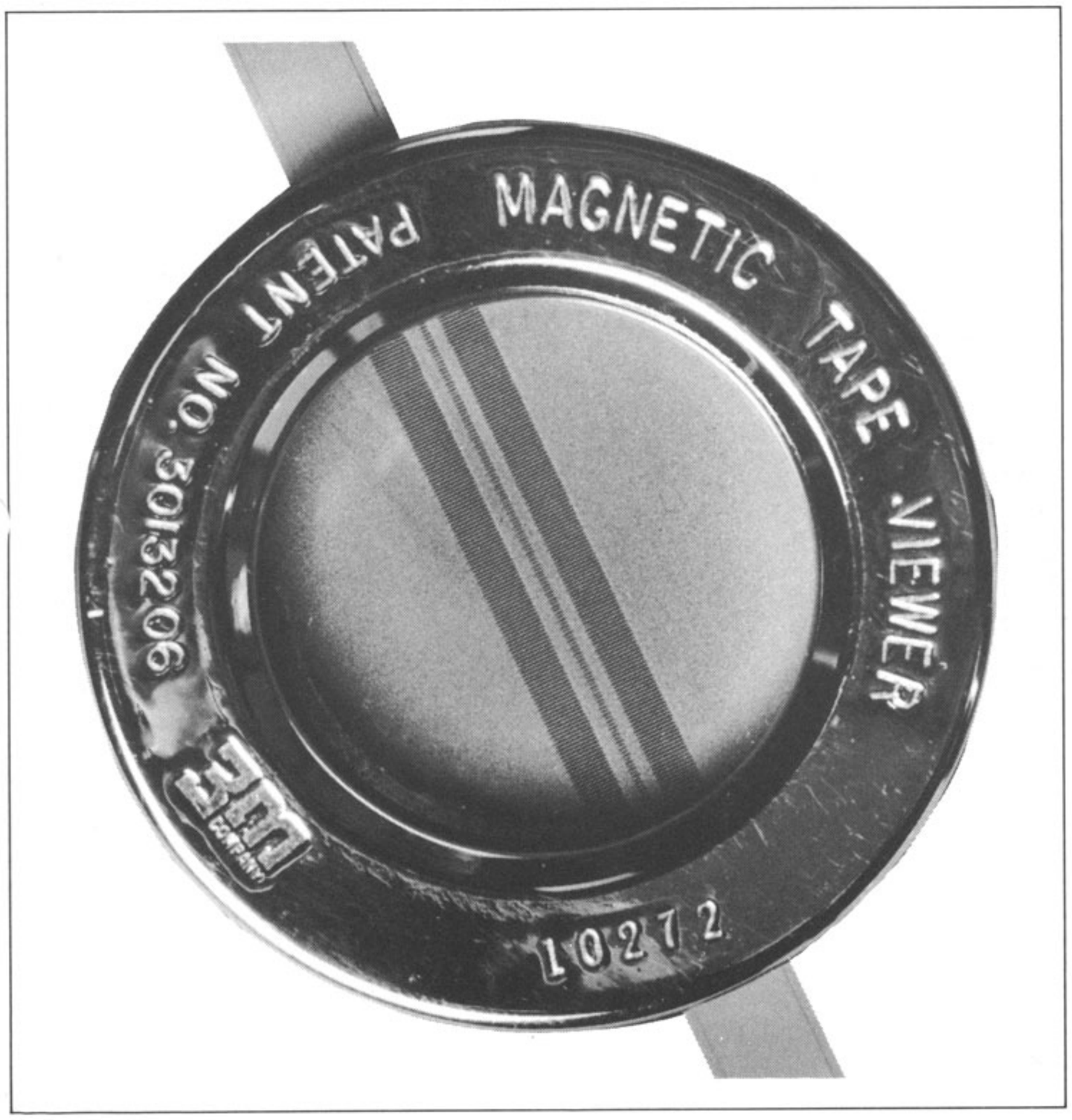

Check the tape movement after the height has been adjusted (4.2.5.3).

4.2.6.3
Preparatory steps

Press time code SAFE button (audio recording inhibited = SAFE).

Connect oscilloscope to test point B.
Mount time code reference tape, start recorder in play mode and measure the magnitude of the signal on test point B. Make a note of this value.

Mount new (or practically new) unrecorded tape.
Press time code READY button.

4.2.6.4
Bias adjustment

Set BIAS trimmer to minimum.
Start recording.
Carefully adjust BIAS trimmer. Rewind tape and switch recorder to play mode. Observe signal shape on oscilloscope. Adjust the bias current so that maximum edge steepness of the reproduce signal is attained.

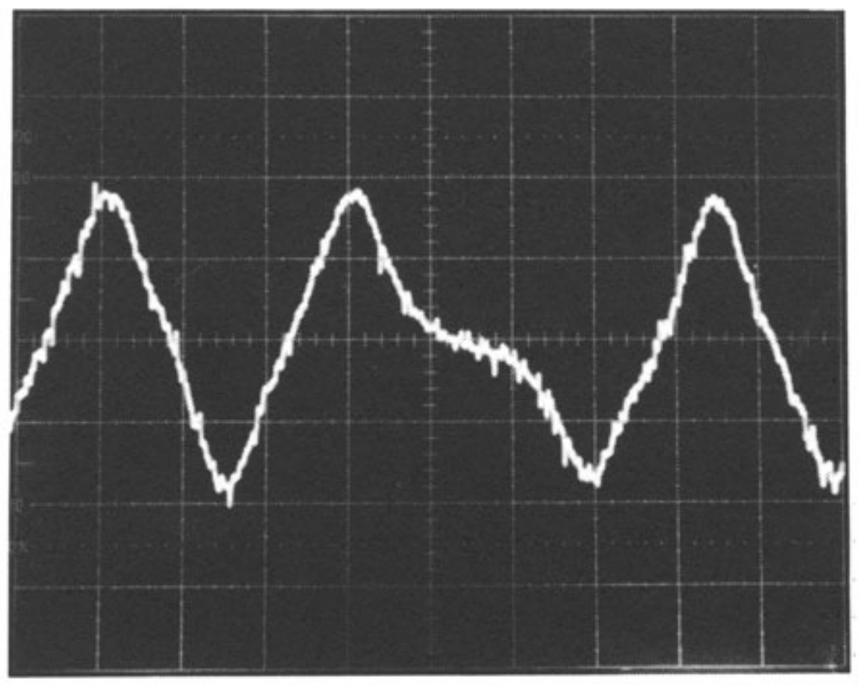

BAD

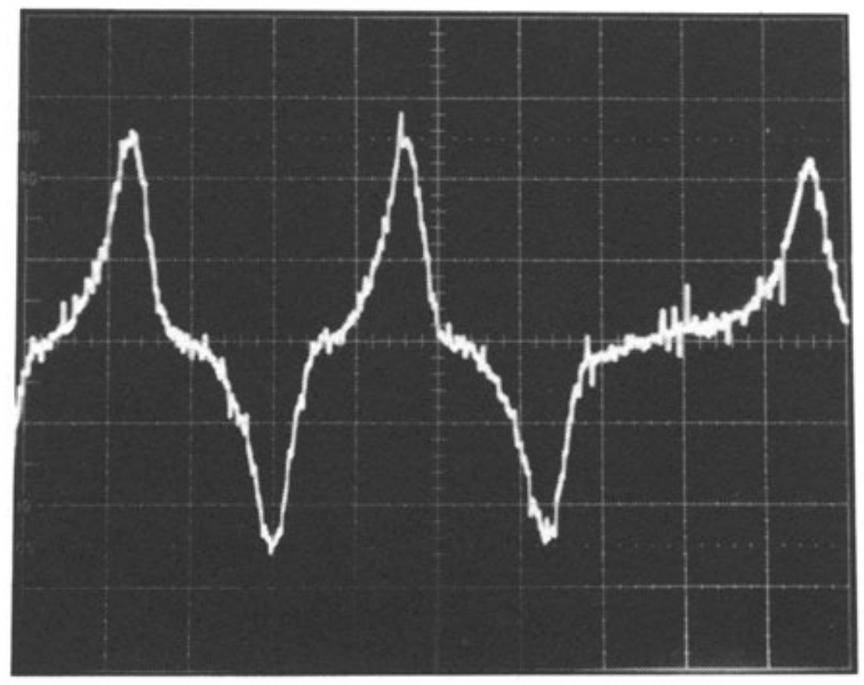

EXCELLENT

VERTICAL DEFLECTION: 0,2V/DIV.
TIME BASE : 0,2ms/DIV.

4.2.6.5
Record level adjustment

With trimmer potentiometer of the corresponding speed adjust the record level so that the reproduce level determined in 4.2.6.3 (or 0.7 Vpp) becomes available on test point B.

4.2.7
External storage of the audio parameters

The content of the RAM can be copied for back-up purpose to an external medium, e.g. an audio tape. The data can also be recorded on an audio tape on the machine of which the audio parameters are to be saved. A special command is available for comparing the data on tape with the RAM content in order to verify correct transmission.
In the following instructions we use the term SAVE for the process of copying the parameters from the RAM of the recorder to an external medium, the term VERIFY for the process of comparing the externally stored data with the content of the RAM in the recorder, and the term LOAD for the process of transferring the externally stored parameters into the RAM of the recorder.

4.2.7.1
Principle of saving the audio parameters

When the recorder receives the "SAVE" command, the microprocessor serially transmits all stored audio parameters to connector pins 4 and 6 of the 9-pin remote control connector. These terminals are balanced and floating. The level is approx. 3 V pp. A parallel load resistor can be connected between terminals 4 and 6 (50 ohms correspond to approx. 2 V pp) in order to match the output level.

Three complete copies of the parameters are transmitted each time for safety reasons, however, one correct transmission is sufficient when reloading. The complete save process takes approximately 30 seconds; the end is signaled on the tape timer display with CC CC (LCD) or CCCCC (LED).

The integrity of the audio parameters stored on tape can be checked with the "VERIFY" command. If the data transmission was correct, the message dd dd (LCD) or ddddd (LED) appears on the tape timer display; if the data is corrupted, the message EE 08 (LCD) or EEE08 (LED) is displayed.

4.2.7.2
Connecting the (cassette) recorder to the remote control connector

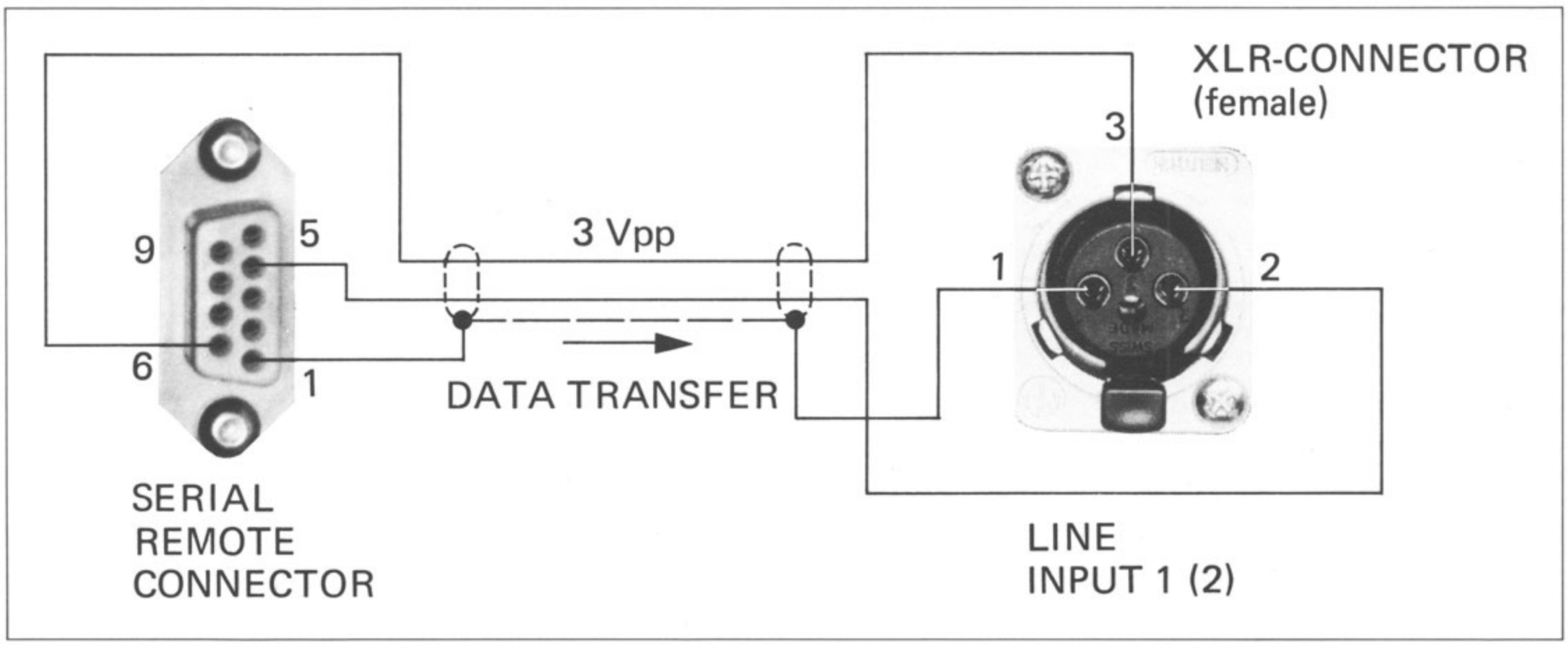

Unbalanced connection (e.g. cassette recorder): interconnect lines 1 and 6 of the 9-pin connector.

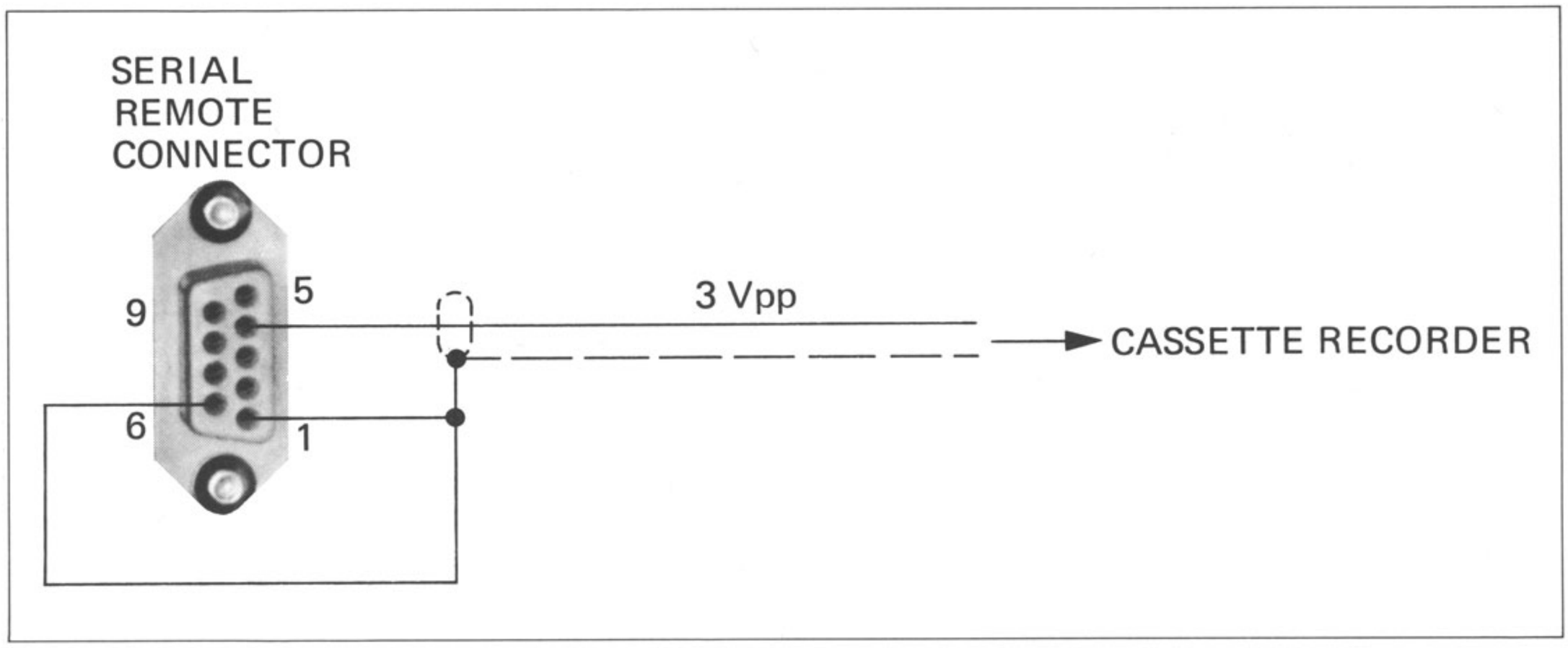

4.2.7.3
Preparatory steps

Replace the address board on the back of the recorder with the SAVE & VERIFY circuit board.

The address board can also be programmed as follows:

SAVE & VERIFY
JS 1 ... JS 6 = 000000
JS 7 = 0, JS 8 = 1

Switch recorder on (or off and on again).
Select tape speed.
Mount an audio tape of sufficient length (recording time at least 30 seconds). Release UNCAL buttons (calibrated level).
Press READY button of the desired recording channel. If the parameters are to be saved on a second reel-to-reel recorder or on a cassette recorder, it is still necessary to mount a tape on the recorder of which the parameters are to be saved, but also press the SAFE buttons.

4.2.7.4
Saving the audio parameters

Start the second recorder or cassette recorder in record mode, if an external tape deck is to receive the data. Subsequently start the recorder of which the parameters are to be saved in record mode (ensure that REC is pressed before PLAY, otherwise the machine starts in verify or load mode!). As soon as the message CC CC (LCD) or CCCCC (LED) appears on the tape timer display, press the STOP key(s). The audio parameters have now been copied three times.

If the message EE 07 (LCD) or EEE07 (LED) is displayed during the recording, a data transmission error has occurred, possibly caused by a transient system voltage failure. Repeat the copying process.

4.2.7.5
Verification

The audio parameters stored on tape can be checked without affecting the RAM content.

Rewind tape with the copied audio data to the beginning.

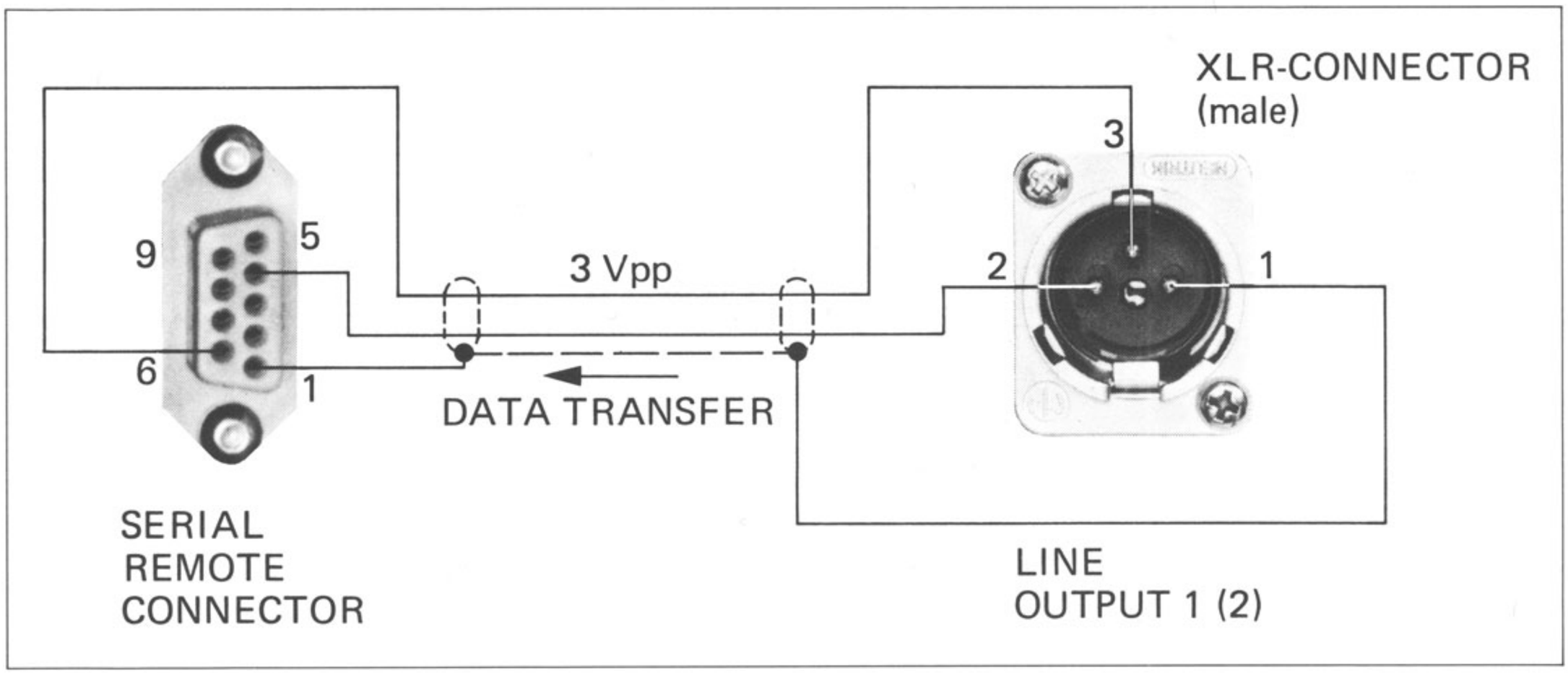

Insert address board SAVE & VERIFY or program the corresponding address (4.2.7.3).
Press PLAY key and start external (cassette) recorder also in play mode.
As soon as the first set of copied parameters has been read and compared, the message dd dd (LCD) or ddddd (LED) is output on the tape timer display.
If the message EE(E)08 is displayed, the saved parameters are corrupted.
Check second and if necessary third copy.

Reasons for faulty recording or reproduction of audio parameters:

- Wiring error with ripple crosstalk;
- Strong wobble (wow and flutter);
- No treble reproduction (treble control closed).

4.2.8
Reading in the audio parameters through the serial remote interface

4.2.8.1
Connecting the (cassette) recorder to the remote control connector

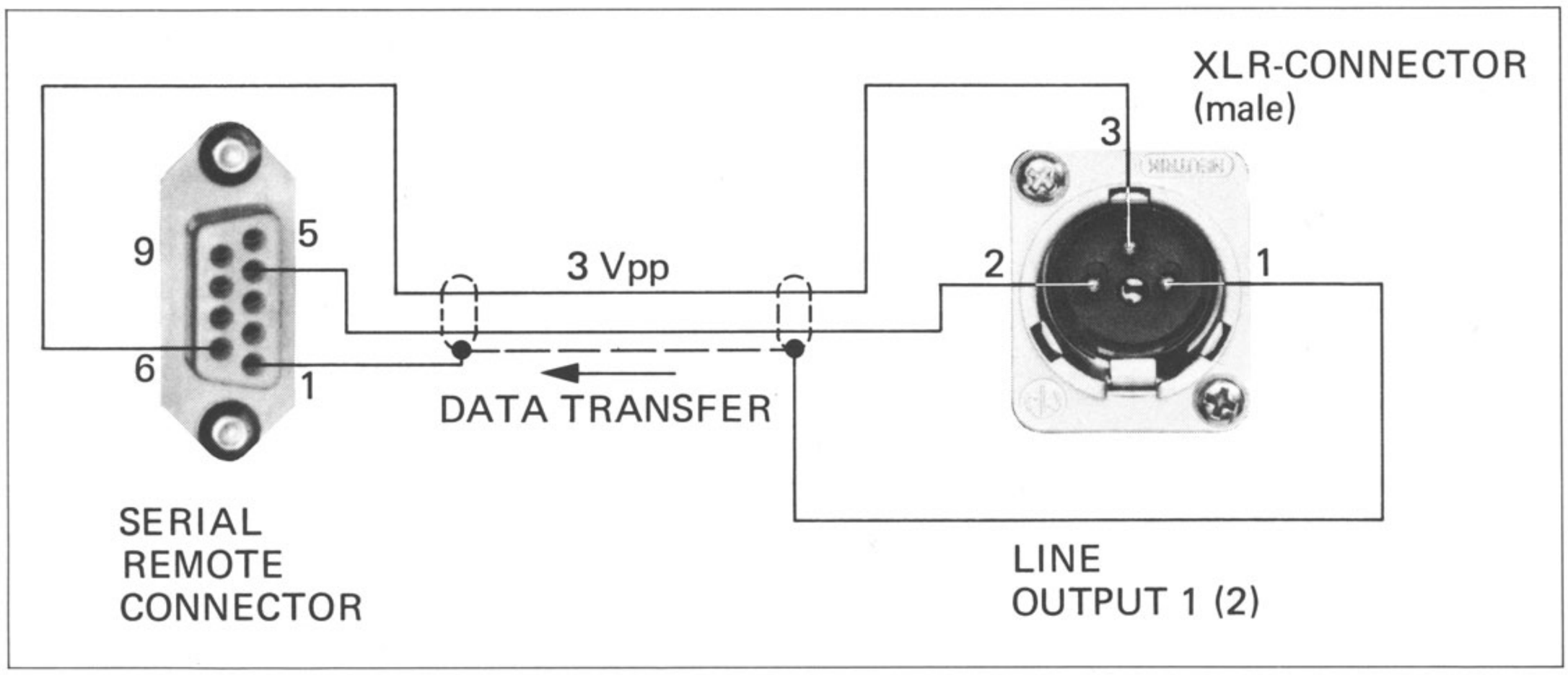

4.2.8.2
Preparatory steps

Replace the address board on the rear of the recorder with the SAVE & LOAD board or program the address board as follows:

SAVE & LOAD
JS 1 ... JS 6 = 111111
JS 7 =0, JS 8 = 1

Switch recorder on (or off and on again).
Select tape speed.
Mount tape containing the saved audio parameters. Even if an external recorder is used it is still necessary to mount a tape on the recorder into which the parameters are to be loaded so that its PLAY function can be enabled.

Caution:

It is also possibly to record data with SAVE & LOAD by starting the machine in record mode. However, the data stored in RAM can be destroyed if the recorder is unintentionally started in play mode rather than record mode and if the microprocessor by coincidence detects a valid label.

4.2.8.3
Loading the audio parameters

Press PLAY key and also start external recorder (if any) in play mode. As soon as the message bb bb (LCD) or bbbbb (LED) appears on the tape timer display, the audio parameters have been correctly stored in the RAM and are automatically read into the D/A converters of the audio amplifiers.

The message EE(E)06) is displayed if the microprocessor detects a data error and the standard audio parameters stored in PROM are automatically loaded in the RAM. Repeat the loading process in this case.

4.2.9
Programming the operating parameters

4.2.9.1
Code switches of the COMMAND UNIT

A microprocessor RESET must be initiated after the operating parameters have been changed with the code switches. Press RESET key of the MP UNIT or turn the power switch off and on again.

The 20 code switches JS 0 ... JS 19 are accessible on the rear of the COMMAND UNIT (lower front panel open).

JS 0 ... JS 2: Time code mode

MODE	Frames/s	JS 1	JS 2	JS 0
FILM STANDARD	24	0	0	
TV EURO STANDARD	25	0	1	
TV US STANDARD B/W	30	1	1	
TV US STANDARD COLOR	29.97	1	0	
1.2 " (30 mm) Offset:				
TYPE STUDER (NO OFFSET)		X	X	0
TYPE PILOT (OFFSET)		X	X	1

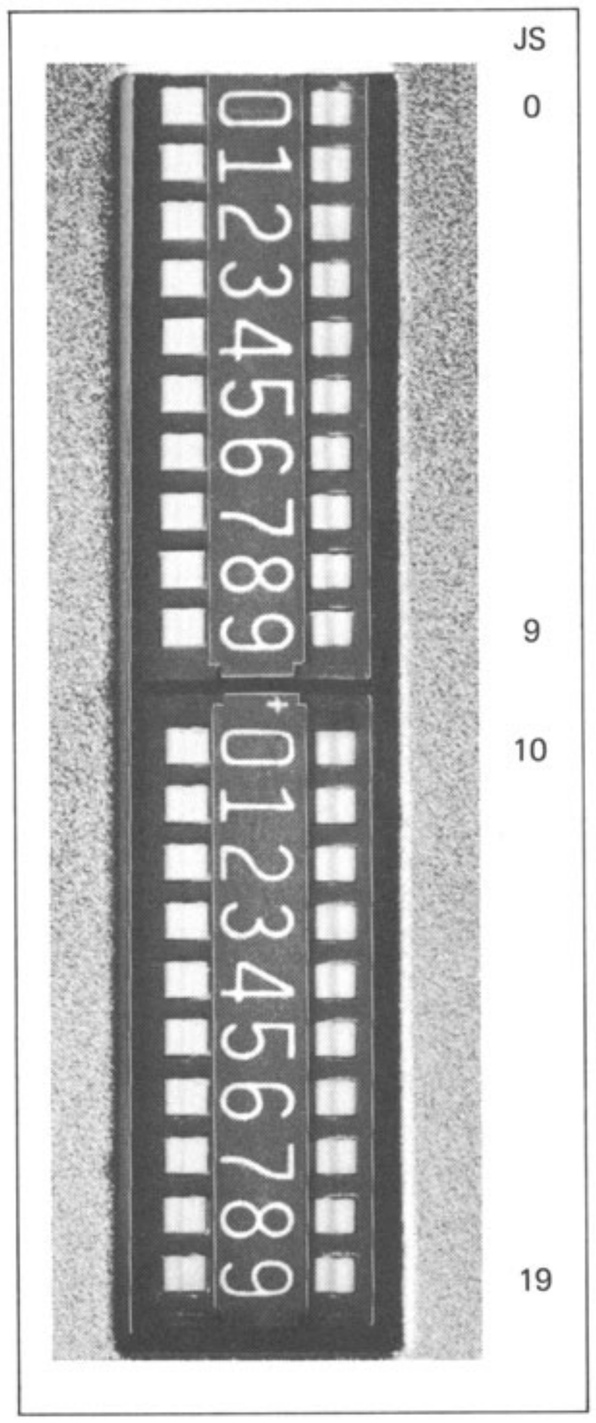

JS 3: LIFTER button

JS 3 = 0 ——> programmed as momentary button
JS 3 = 1 ——> programmed as flip-flop button

JS 4, JS 5: Drop-in/drop-out

The time offset of the drop-in can be disabled with JS 5 = 1 (erase and record head switch on concurrently)
The time offset of the drop out can be disabled with JS 4 = 1 (erase and record head switch off concurrently).

JS 6 ... JS 8: Tape type selection

The A810 recorder can be calibrated for two different tape formulations. The manner of changeover for tape type "A" or "B" can be selected with the three ode switches JS 6, 7, and 8.

TAPE TYPE	TAPE SPEED	JS 8	JS 7	JS 6
"A"	SLOW	0	X	1
"B"	SLOW	1	X	1
"A"	FAST	X	0	1
"B"	FAST	X	1	1
If the tape recorder is not equipped with a mono/stereo switch, the pushbuttons on the master panel can be reprogrammed as a tape type selector:				
TAPE TYPE SELECTOR		NO ACTION !!		0
MONO-STEREO-SWITCH		X	X	1

JS 9 ... JS 11: Tape speed

Low-speed versions:
Two of three tape speeds are programmable:
SLOW and FAST.

High-speed versions:
All four tape speeds can be selected with the rotary switch on the MASTER panel. JS 9...11 must be set accordingly!

The following tape speeds can be selected, depending on the capstan motor model:
3.75 7.5 15 30 ips

TAPE SPEED SLOW (ips)	TAPE SPEED FAST (ips)	JS 9	JS 10	JS 11	CAPSTAN (No. of poles)	REMARK
3.75	7.5	0	0	1	4	
3.75	15	0	1	0	4	
7.5	15	1	0	0	4	STANDARD
4 SPEED VERSION		0	0	0	2	STANDARD FOR HS VERSIONS

JS 12: Drop-in

JS 12 = 0 ——> Drop-in with REC (provided recorder is already in REC mode)
JS 12 = 1 ——> Drop-in with PLAY + REC

JS 13 ... JS 19: Programmable keys

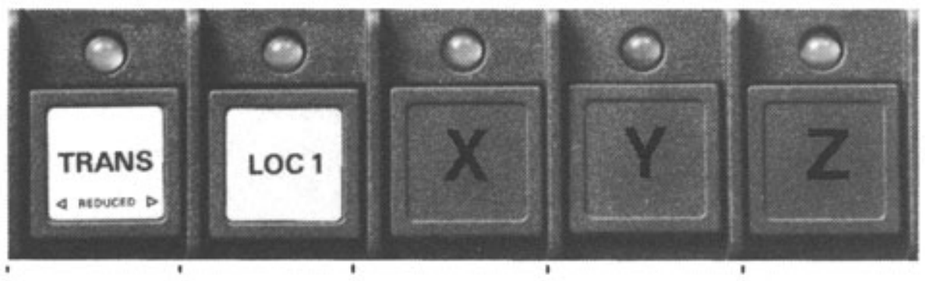

					CODE SWITCHES JS: 13	14	15	16	17	18	19
TRANS	LOC 1	LOC 2	LOC 3	LOC 4	0	0	0	0	0	0	0
TRANS	LOC 1	LOC 2	LOC 3	LOCST	0	1	0	0	0	0	1
TRANS	LOC 1	LOC 2	LOC 3	LIFTER	0	1	0	0	0	1	0
TRANS	LOC 1	LOC 2	LOC 3	FADER	0	1	0	0	0	1	1
TRANS	LOC 1	LOC 2	LOC 3	TAPDMP	0	1	0	0	1	0	0
TRANS	LOC 1	LOC 2	LOC 3	REMCTR	0	1	0	0	1	0	1
TRANS	LOC 1	LOC 2	LOC 3	CODREA	0	1	0	0	1	1	0
TRANS	LOC 1	LOC 2	LOCST	LIFTER	1	0	0	0	0	0	1
TRANS	LOC 1	LOC 2	LOCST	FADER	1	0	0	0	0	1	0
TRANS	LOC 1	LOC 2	LOCST	TAPDMP	1	0	0	0	0	1	1
TRANS	LOC 1	LOC 2	LOCST	REMCTR	1	0	0	0	1	0	0
TRANS	LOC 1	LOC 2	LOCST	CODREA	1	0	0	0	1	0	1
TRANS	LOC 1	LOC 2	LIFTER	FADER	1	0	0	0	1	1	0
TRANS	LOC 1	LOC 2	LIFTER	TAPDMP	1	0	0	0	1	1	1
TRANS	LOC 1	LOC 2	LIFTER	REMCTR	1	0	0	1	0	0	0
TRANS	LOC 1	LOC 2	LIFTER	CODREA	1	0	0	1	0	0	1
TRANS	LOC 1	LOC 2	FADER	TAPDMP	1	0	0	1	0	1	0
TRANS	LOC 1	LOC 2	FADER	REMCTR	1	0	0	1	0	1	1
TRANS	LOC 1	LOC 2	FADER	CODREA	1	0	0	1	1	0	0
TRANS	LOC 1	LOC 2	TAPDMP	REMCTR	1	0	0	1	1	0	1
TRANS	LOC 1	LOC 2	TAPDMP	CODREA	1	0	0	1	1	1	0
TRANS	LOC 1	LOC 2	REMCTR	CODREA	1	0	0	1	1	1	1
TRANS	LOC 1	LOCST	LIFTER	FADER	1	1	0	0	0	0	1
TRANS	LOC 1	LOCST	LIFTER	TAPDMP	1	1	0	0	0	1	0
TRANS	LOC 1	LOCST	LIFTER	REMCTR	1	1	0	0	0	1	1
TRANS	LOC 1	LOCST	LIFTER	CODREA	1	1	0	0	1	0	0
TRANS	LOC 1	LOCST	FADER	TAPDMP	1	1	0	0	1	0	1
TRANS	LOC 1	LOCST	FADER	REMCTR	1	1	0	0	1	1	0
TRANS	LOC 1	LOCST	FADER	CODREA	1	1	0	0	1	1	1
TRANS	LOC 1	LOCST	TAPDMP	REMCTR	1	1	0	1	0	0	0
TRANS	LOC 1	LOCST	TAPDMP	CODREA	1	1	0	1	0	0	1
TRANS	LOC 1	LOCST	REMCTR	CODREA	1	1	0	1	0	1	0
TRANS	LOC 1	LIFTER	FADER	TAPDMP	1	1	0	1	0	1	1
TRANS	LOC 1	LIFTER	FADER	REMCTR	1	1	0	1	1	0	0
TRANS	LOC 1	LIFTER	FADER	CODREA	1	1	0	1	1	0	1
TRANS	LOC 1	LIFTER	TAPDMP	REMCTR	1	1	0	1	1	1	0
TRANS	LOC 1	LIFTER	TAPDMP	CODREA	1	1	0	1	1	1	1
TRANS	LOC 1	LIFTER	REMCTR	CODREA	1	1	1	0	0	0	0
TRANS	LOC 1	FADER	TAPDMP	REMCTR	1	1	1	0	0	0	1
TRANS	LOC 1	FADER	TAPDMP	CODREA	1	1	1	0	0	1	0
TRANS	LOC 1	FADER	REMCTR	CODREA	1	1	1	0	0	1	1
TRANS	LOC 1	TAPDMP	REMCTR	CODREA	1	1	1	0	1	0	0

4.2.9.2
Code switches PERIPHERY CONTROLLER

The code switch JS 8 must be in the "ON" position before data is entered with the code switches JS 1 ... 7!

JS 1, JS 2: Erase head

The type of erase head is programmed as follows:

ERASE HEAD	JS 2	JS 1
FULL TRACK	0	1
TWO TRACK	1	0
WITH TIME CODE TRACK	1	1
NO RECORD	0	0

JS 3: Channel control on 2-channel recorders:

The SAFE, READY, INP, SYNC, REC buttons can be programmed to control the channels individually or in parallel:

JS 3 = 0 ——> INDIVIDUAL
JS 3 = 1 ——> PARALLEL

JS 4: Automatic muting during search (AUTO MUTE):

On recorders equipped with the MP UNIT 1.810.752:

JS 4 = SPARE (not used)

On recorders with the MP UNIT 1.820.780 (in development):

JS 4 = 0 ——> AUTO MUTE off
JS 4 = 1 ——> AUTO MUTE on

JS 5, JS 6: Line level

The following line levels (operating level = peak level - 6 dB) can be programmed for the inputs and outputs of the recorder:

LINE LEVEL	JS 6	JS 5
0 dBm	0	0
4 dBm	0	1
8 dBm	1	0
10 dBm	1	1

JS 7: CCIR/NAB equalization

JS 7 = 0 ——> Different audio parameters (bias, level, frequency response) for CCIR and NAB
JS 7 = 1 ——> Identical audio parameters for CCIR and NAB

This code switch must be set before the other audio parameters are programmed; it has no effect on previously stored parameters!

JS 8: Input keyboard for audio parameters

JS 8 = 0 ——> Keyboard disabled, code switches JS 1...7 are not read
JS 8 = 1 ——> Keyboard enabled, code switches JS 1...7 are read

JS 2 ... JS 9: VU-meter panel, mono-stereo switch:

EQUIPMENT	CODE SWITCHES JS: 2	3	4	5	6	7	8	9
NO VU PANEL, NO M/S SWITCH	0	1	1	1	0	1	0	1
WITH VU PANEL, NO M/S SWITCH	1	0	1	1	1	0	1	1
NO VU PANEL, WITH M/S SWITCH	0	1	0*	1*	0	1	1	0
WITH VU PANEL, WITH M/S SWITCH	1	0	0*	1*	1	0	0	0

* This switch position means that RECIN output of the mono-stereo switch can be heard when the output selector is in the INP position; if the input signal of the mono-stereo switch is to be tapped, set JS 4 = 1 and JS 5 = 0.

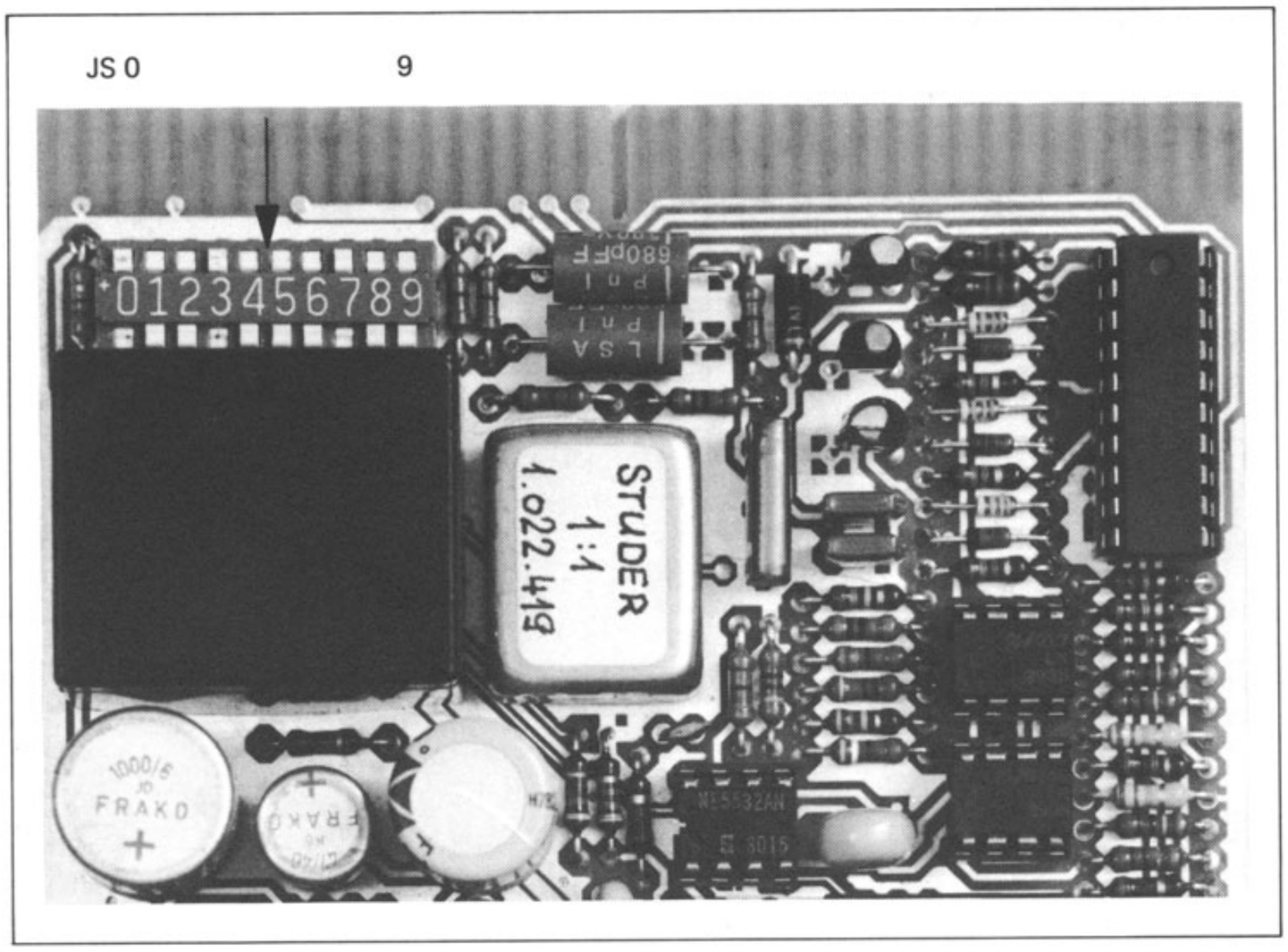

Note

On recorders equipped with a mono-stereo switch, code switch 6 of the COMMAND UNIT must be JS 6 = 1!

JS 2 ... JS 9: VU-meter panel, mono-stereo switch:

EQUIPMENT	CODE SWITCHES JS: 2	3	4	5	6	7	8	9
NO VU PANEL, NO M/S SWITCH	0	1	1	1	0	1	0	1
WITH VU PANEL, NO M/S SWITCH	1	0	1	1	1	0	1	1
NO VU PANEL, WITH M/S SWITCH	0	1	0*	1*	0	1	1	0
WITH VU PANEL, WITH M/S SWITCH	1	0	0*	1*	1	0	0	0

* This switch position means that RECIN output of the mono-stereo switch can be heard when the output selector is in the INP position; if the input signal of the mono-stereo switch is to be tapped, set JS 4 = 1 and JS 5 = 0.

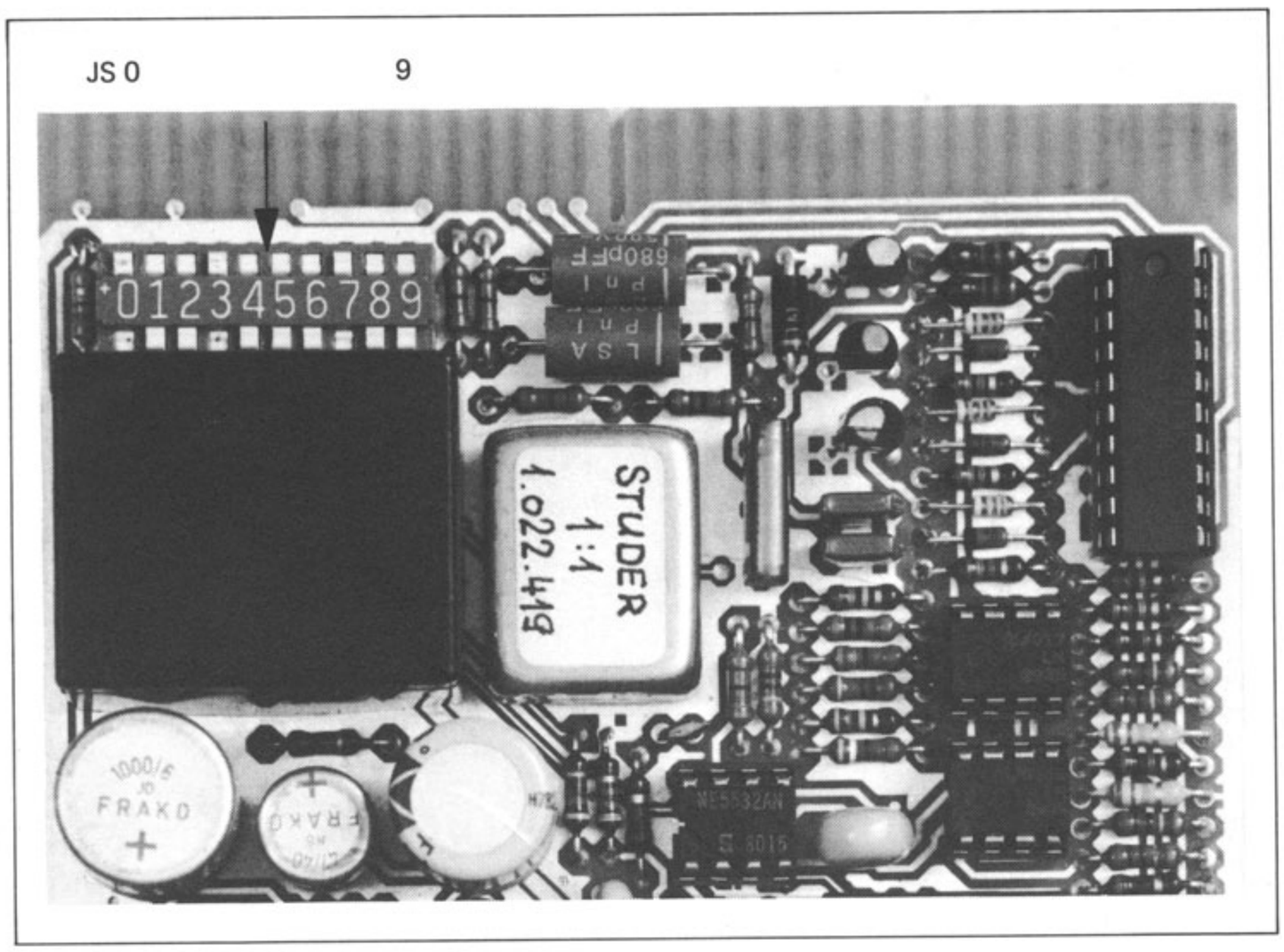

Note

On recorders equipped with a mono-stereo switch, code switch 6 of the COMMAND UNIT must be JS 6 = 1!

4.2.9.4
Jumper REPRODUCE AMPLIFIER

The sync reproduce frequency response can be switched over from 12 kHz to 20 kHz.

Note

Strong cross talk between the record channel and the sync reproduce channel is to be exptected above 12 kHz!

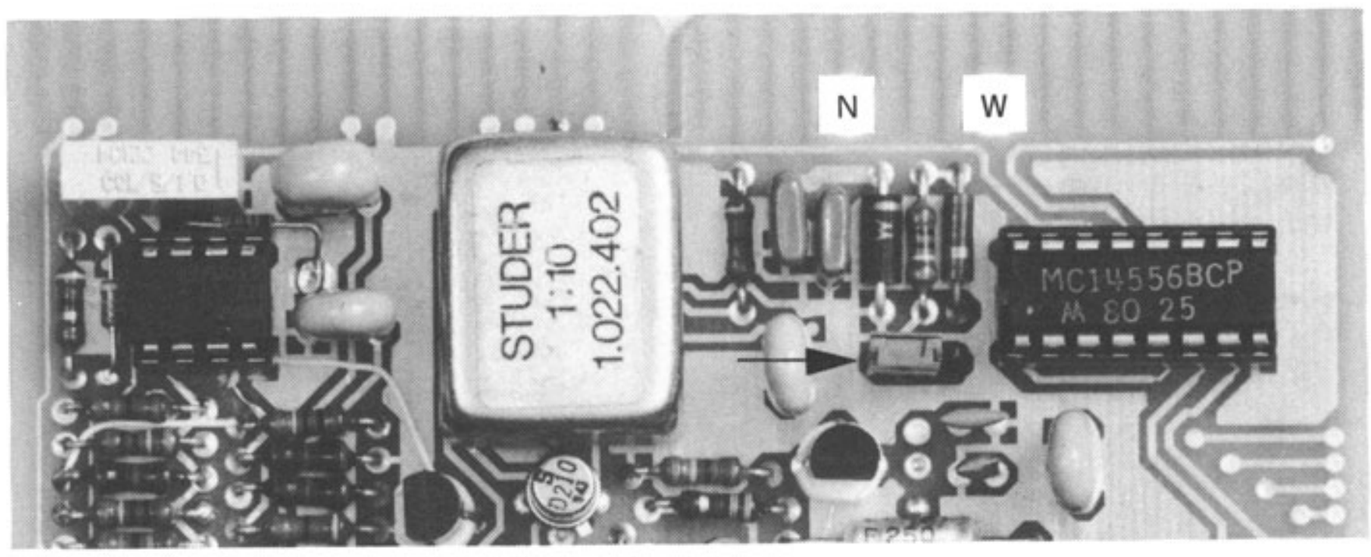

4.2.9.5
Jumper VU-meter amplifier

The indication mode can be selected separately for each meter (VU or PPM) with the jumper on the back of the VU-meter panel.

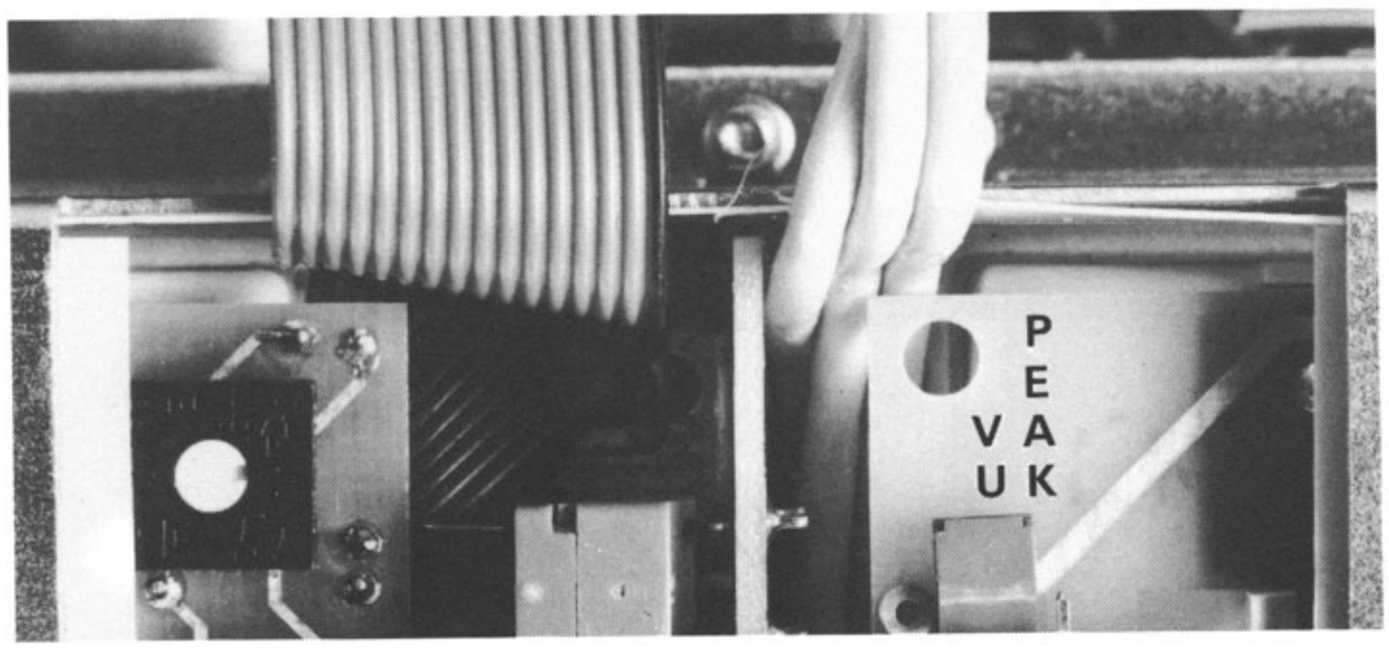

VU-indication according to IEC recommendation 268, Part 10, Section 4.

Peak program (PPM) indication according to IEC recommendation 268, Part 10, Section 3 (except 24, 1, scale division)

On console versions it is necessary to remove the VU-meter by unfastening the 4 mounting screws (front).

4.2.9.6
Jumper and code switches SERIAL REMOTE CONTROLLER

The jumper on the SERIAL REMOTE CONTROLLER must be in the "X" position on recorders equipped with the MP UNIT 1.810.752 or with the MP UNIT 1.820.780 and for software release date up to 13/83; for the MP UNIT 1.820.780, and software release date 14/83 or later, it must be in the "H" position.

JS 1 = 1 ——> BUS DISPLAY off
JS 1 = 1 ——> BUS DISPLAY on

For MP UNIT 1.810.752 and for MP UNIT 1.820.780 with software release date up to 13/83:

JS 2 = 0 ——> RS 232
JS 2 = 1 ——> Data to be saved on tape

For MP UNIT 1.820.780 and software date 10/83 and later:

JS 2 = SPARE (not used, automatic switch-over)

JS 3 = SPARE (not used)

JS 4 = 0 ——> BUS DISPLAY indicates WRITE signals
JS 4 = 1 ——> BUS DISPLAY indicates READ signals

The code switches JS 5 ... 8 select the assemblies of which the status is to be indicated on the BUS display.

JS 5 = 0 ——> Status of COMMAND UNIT suppressed
JS 5 = 1 ——> Status of COMMAND UNIT on BUS DISPLAY

JS 6 = 0 ——> Status of TAPE DECK CONTROLLER suppressed
JS 6 = 1 ——> Status of TAPE DECK CONTROLLER on BUS DISPLAY

JS 7 = 0 ——> Status of PERIPHERY CONTROLLER suppressed
JS 7 = 1 ——> Status of PERIPHERY CONTROLLER on BUS DISPLAY

JS 8 = SPARE (not used)

4.2.9.7
Code switches SERIAL INTERFACE

A microprocessor RESET must be initiated after the operating parameters are changed with the code switches of the SERIAL INTERFACE.
Press RESET button of the MP UNIT or turn the power switch off and on again.

The code switches are accessible on the rear of the recorder (on the ADDRESS BOARD).

JS 1 ... JS 6:

- Operation with STUDIO bus (JS 7 = 1, JS 8 = 1; see below!):
  JS 1 ... JS 6 = any setting (device address)

- Operation with terminal (RS 232; JS 7 and JS 8 see below!):
  JS 1 ... JS 6 ≠ 000001: ECHO MODE = each character is transmitted back to the terminal
  JS 1 ... JS 6 = 000001: no ECHO MODE

- Saving data (JS 7 = 0, JS 8 = 1; see below!):
  JS 1 ... JS 6 = 000000: SAVE & VERIFY, data to be saved on tape and verified
  JS 1 ... JS 6 = 111111: SAVE & LOAD, data to be saved on tape and loaded

JS 7, JS 8: Baud rate

BAUD RATE	JS 7	JS 8	
9600 *	0	0	
1200 *	1	0	
1200 **	0	1	===> JS 1 ... JS 6 = 000000 or 111111 !!
300 *	0	1	===> JS 1 ... JS 6 ≠ 000000 or 111111 !!
XX	1	1	

* Terminal (RS 232)
** Data to be saved on tape
XX Baud rate for STUDIO bus (probably 38400 baud)

4.2.9.8
VU-meter panel internal or external

A jumper on the BUS CONNECTOR board defines whether an internal or external VU-meter panel is used.

Access to this circuit board is gained by removing the rear panel of the recorder (disconnect power plug before removing the rear panel!).

The jumper must be in the INTERN position if neither a VU-meter panel nor a channel control unit is used!

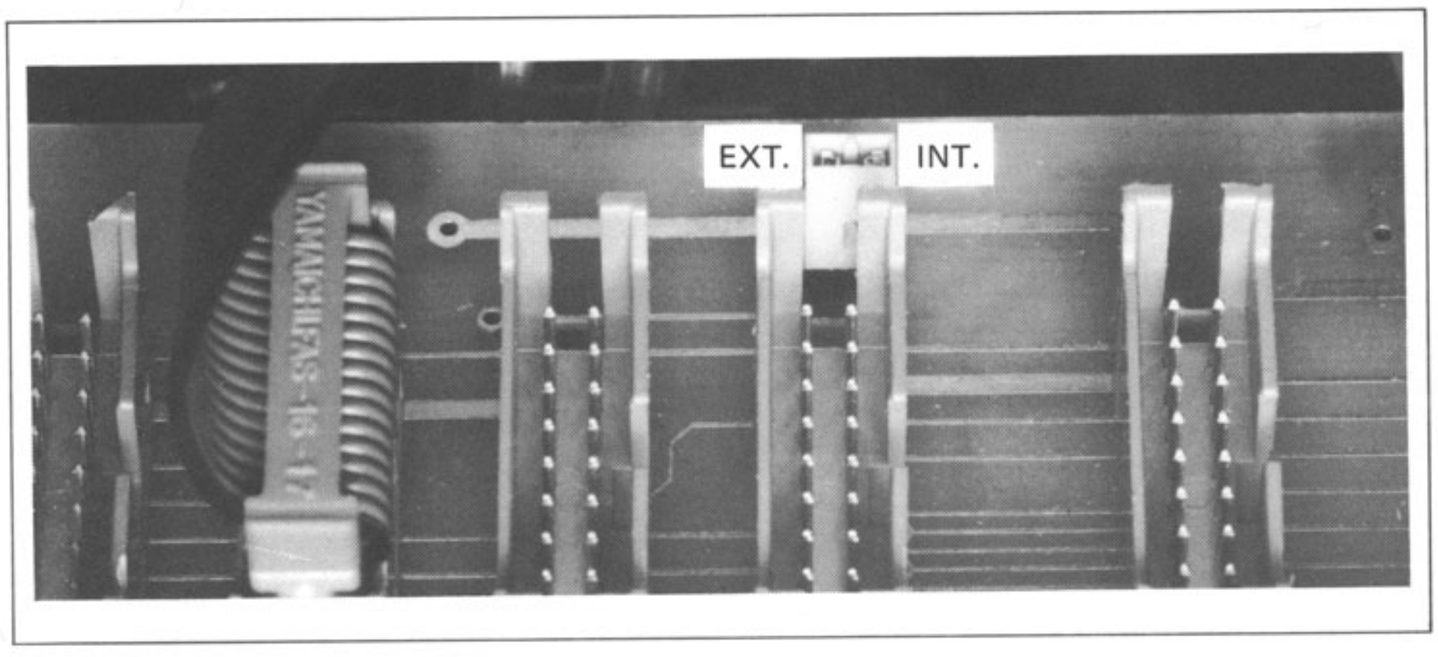

4.2.9.9
Jumpers MONO/STEREO SWITCH and/or TEST GENERATOR

Recorders equipped with a test generator but without mono-stereo switch require the electronics of the mono-stereo switch. In this case the signal TA-ACTMO must be pulled to ground with the jumper JS 1. Operation without mono-stereo swich is simulated to the microprocessor so that the mono-stereo switch will not be accessed.

The record mode is defined by jumper JS 2: mono signals are either from the input of channel 1 only or the sum of the inputs channel 1 + 2.

The reproduce mode is defined by jumper JS3: The aggregat signal of channels 1 + 2 can either be placed on channel 1 or to channels 1 and 2.

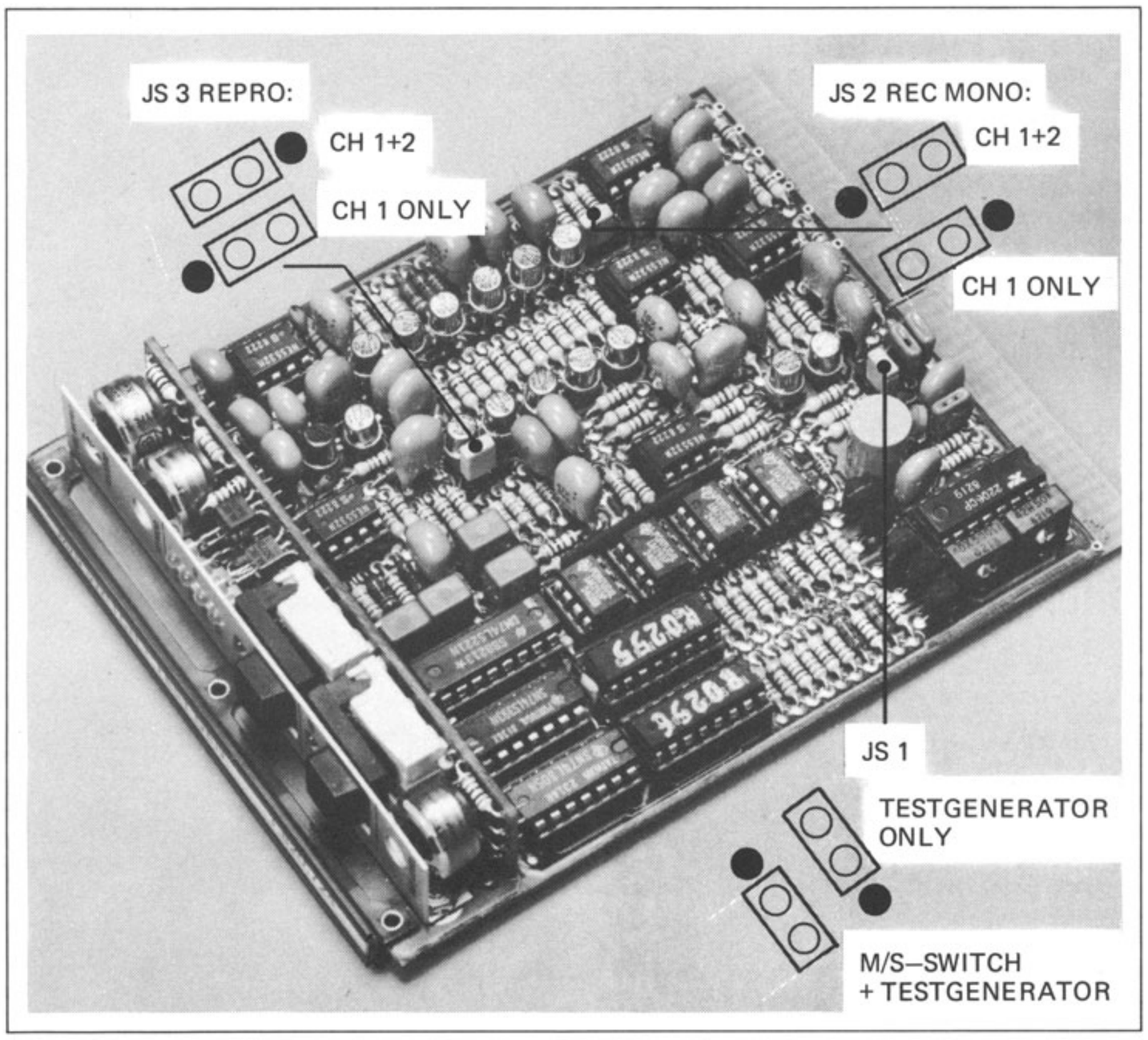

4.2.9.10
Jumper TIME code read/write unit

If the code channel is operated without CODE DELAY UNIT 1.820.722, the delay input and output must be interconnected. This can be accomplished through the serial remote controller (2.8.3) (if configured) or with jumper JS 1 on the CODE READ/WRITE amplifier. No CODE DELAY UNIT must be present if jumper JS1 is inserted!

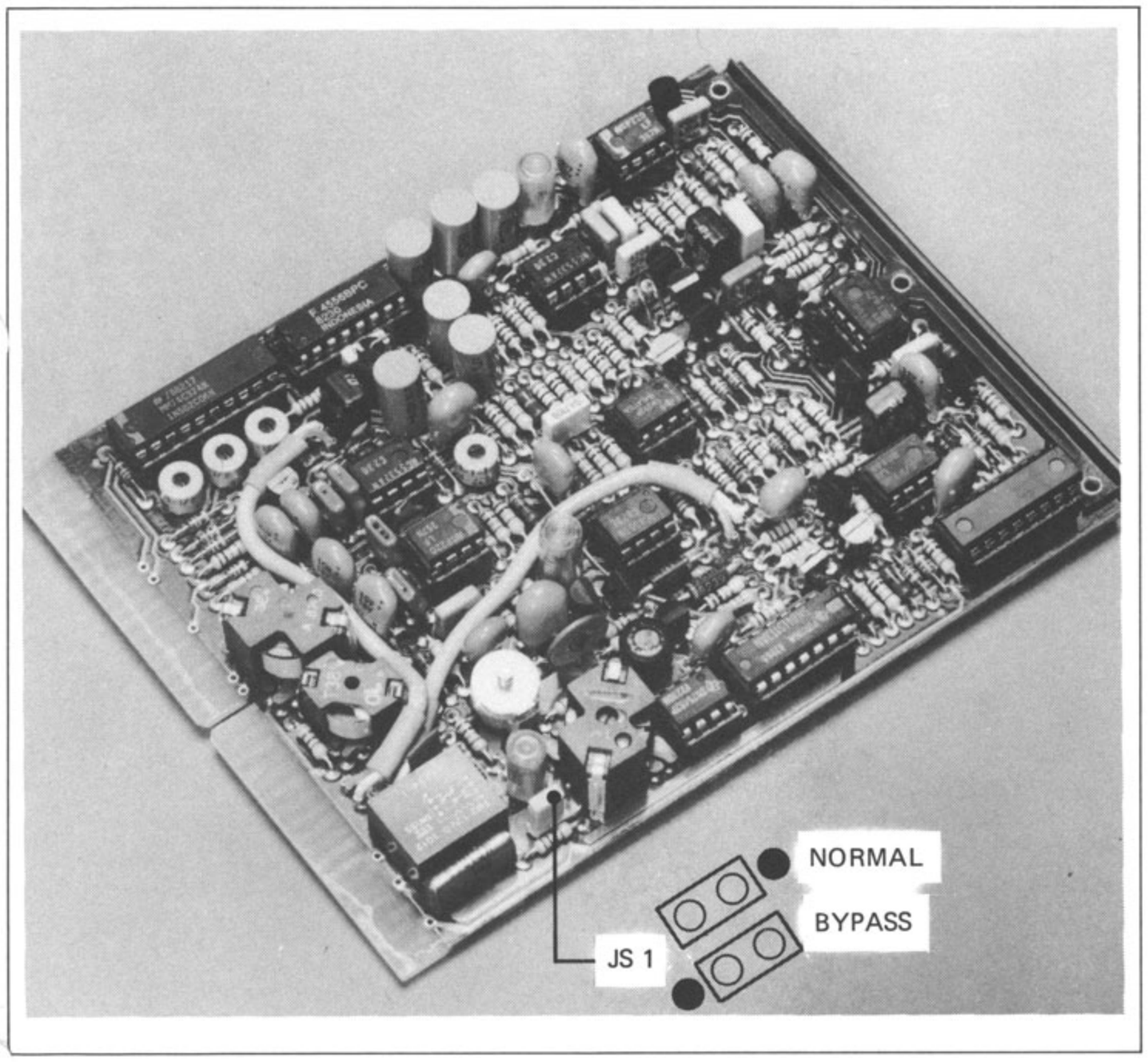

4.2.9.11
Jumpers TAPE DECK CONTROLLER

The jumper JS 1 is not used (SPARE).

The microprocessor must be informed with JS 2 whether an LCD (liquid crystal display) or a LED tape timer display is installed. (JS2 inserted: LCD, JS 2 removed: LED display).

If jumper JS3 is not plugged in, certain tape travel functions are not monitored (important for mechanical tape transport adjustments, Section 3.3).

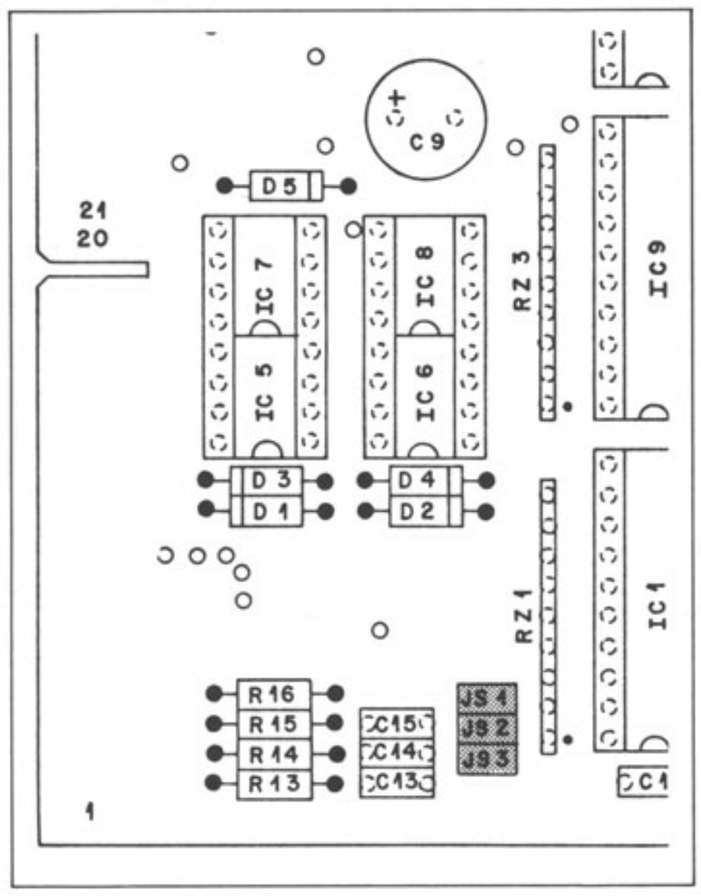

4.2.9.12
Jumpers CAPSTAN MOTOR CONTROL

JS 1: This jumper matches the control time constant for the 2-pole or 4-pole capstan motor.

JS 2: This jumper programs the capstan motor to switch off after TAPE OUT (no tape threaded or tape torn) in order to protect the bearings from unnecessary wear.

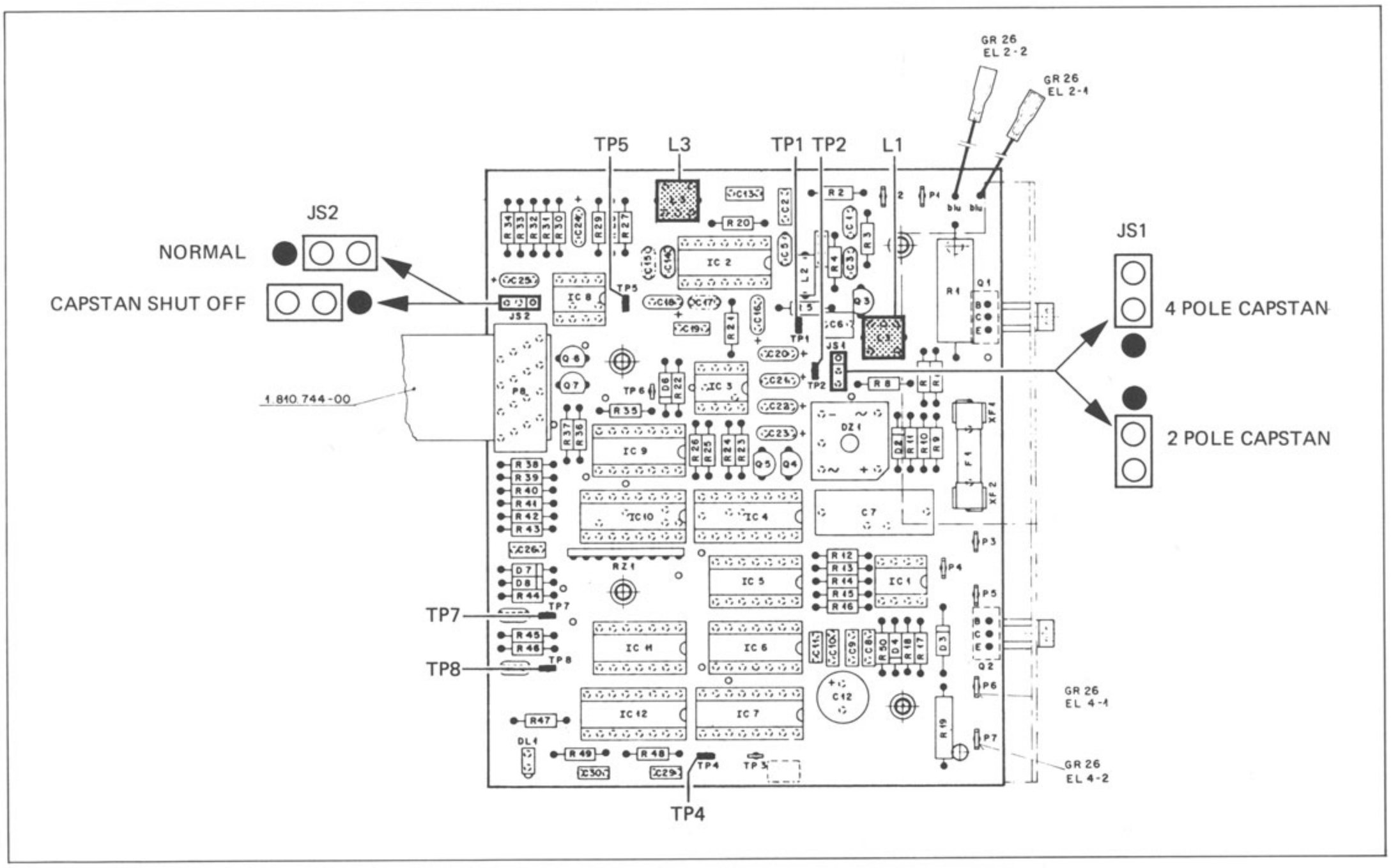

BIAS ADJUSTMENTS

Bandsorte Type of tape Type de bande	ΔU [dB] 9,5 cm/s (3¾ ips)	ΔU [dB] 19 cm/s (7½ ips)	ΔU [dB] 38 cm/s (15 ips)	ΔU [dB] 76 cm/s (30 ips)
Agfa PEM 468	6	6	3.5	1.5
Agfa PER 525	6	6	3	1
Agfa PER 528	6	6	3.5	1.5
Ampex 406	6	5	3	1.5
Ampex 456 GRAND MASTER	5	6.5	3.5	1.5
BASF LGR 30P	6	6	4	1.5
BASF LGR 50P	6	6	4	1.5
BASF SPR 50 LH/50 LHL	6	5.5	3.5	1.5
EMI 816/817	6	6.5	4	1.5
PYRAL CJ90	6	6.5	3.5	1.5
SCOTCH (3M) 206	5.5	5.5	3	1.5
SCOTCH (3M) 226	6	6	3.5	1.5
SCOTCH (3M) 250	5	6	3.5	1
SCOTCH (3M) 256	6	6.5	3.5	1
SCOTCH (3M) 263	6	6	3	1