# STEM Lesson n°1

## « Pedro Discover »

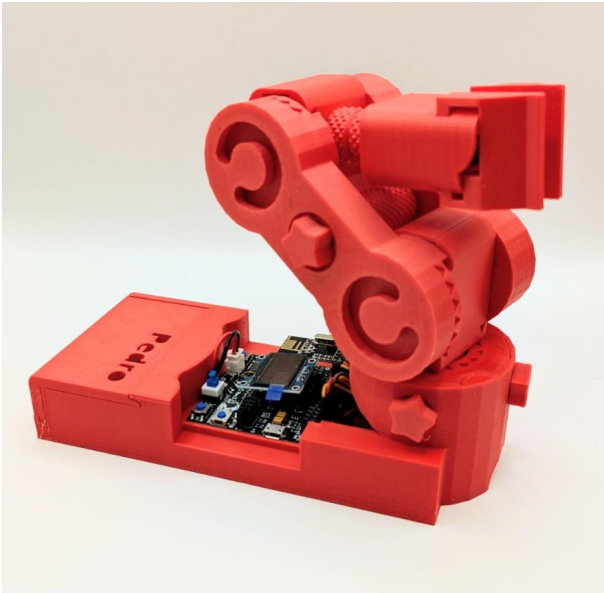

**v1.0.2**

# 🎯 Learning Objective

This lesson introduces students to **P.E.D.R.O the Programmable Educational Robot**, the fully 3D-printed, open-source robot designed to make robotics learning fun and hands-on. By the end of this session, students will be able to:

- Understand what a robot is
- Identify the main parts of a robot
- Discover how robots interact with the physical world
- Understand the mission of the Pedro robot
- Work collaboratively in a robotics team
- Learn how 3D printing works and how robots are designed

# 👨‍🏫 Teacher Notes

Duration: **60-90 minutes**

Materials:

- 1 Pedro robot (assembled and introduce by the teacher)

Teaching approach:

- inquiry-based learning
- hands-on discovery
- teamwork
- problem solving

## Table of Contents

🎯 Learning Objective....2
👨‍🏫 Teacher Notes....2
1. Introduction to the Pedro Robot....3
2. What Is a Robot?....4
3. Observe Pedro....4
4. Understanding 3D Printing....5
5. Discover Robot Movement....6
6. Pedro's First Task....7
7. Pedro STEM Program Roadmap....7
📝 Quiz - Check Your Understanding....8

# 1. Introduction to the Pedro Robot

Pedro is a programmable educational robot designed to help students learn robotics in a fun and hands-

on way.  It is a **robotic arm** made of 3D-printed parts, controlled by a microcontroller, and powered by motors that allow it to move and interact with its environment.  Through Pedro, students can explore how robots **think (programming), move (mechanics), and communicate (electronics)**.
But before building and programming Pedro in future lessons, you must first understand how robots work.

## 2. What Is a Robot?

Ask students: What do you think a robot is? Let students discuss in small groups. Then explain:
A robot is a machine that can:

1. **Sense** the environment
2. **Process** information
3. **Act** by moving or performing tasks

Example robots:

- factory robotic arms
- Mars rovers
- medical robots
- warehouse robots

Pedro is a **robotic arm**, similar to those used in industry.

## 3. Observe Pedro

Place the Pedro robot in front of the class. Ask students to observe it carefully.

**Discussion questions:**

- What parts can you see?
- How many motors do you think it has?
- How do you think it moves?

Students write their ideas. Explain the main components of Pedro.

| Component | Function |
|---|---|
| Controller Board | The brain of the robot |
| Servo Motors | Create movement |
| Robot Structure | Holds the robot together |
| Gripper | Allows the robot to grab objects |
| Power Supply | Provides energy |

Teacher tip: Let students **touch and inspect the robot.**

# 4. Understanding 3D Printing

Pedro is designed to be **fully manufacturable with a 3D printer**. 3D printing creates objects by depositing material **layer by layer**.

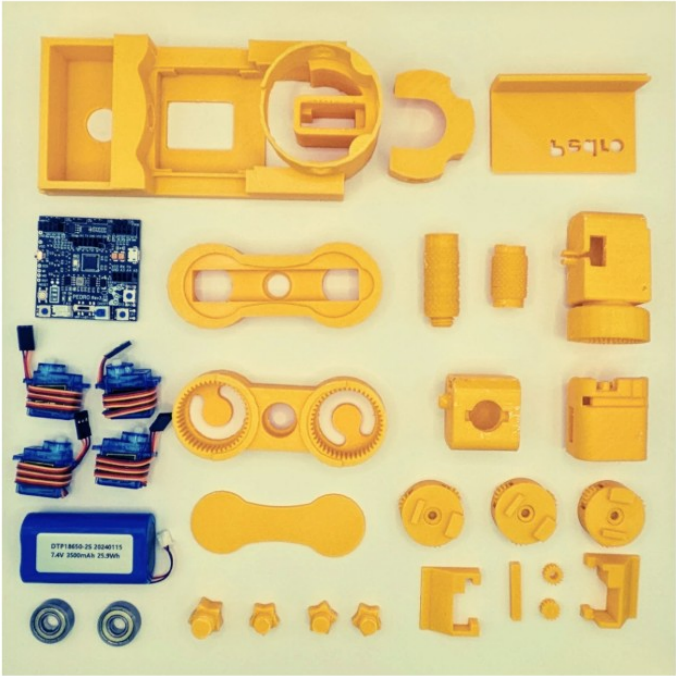

Common materials used:

1. PLA plastic
2. ABS plastic

Before printing a part, several important steps are needed:

The 3D Printing Workflow

- Design the part in CAD software
- Export the design as an STL file
- Convert the STL file to G-code
- Send the G-code to the 3D printer

Pedro requires only **four main printable models**: BASE.stl, SERVO.stl, ARM.stl, GEAR.stl

These files are available in the Pedro open-source repository ([https://github.com/almtzr/Pedro](https://github.com/almtzr/Pedro)). Students can download them and **print their own robot parts** if needed.

| | |
|---|---|
| 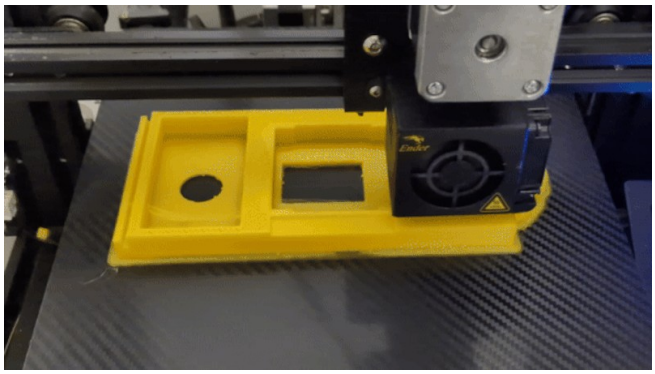 BASE.stl | 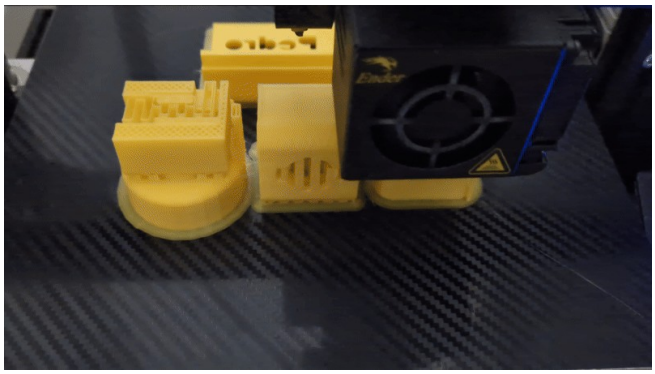 SERVO.stl |
| ARM.stl | 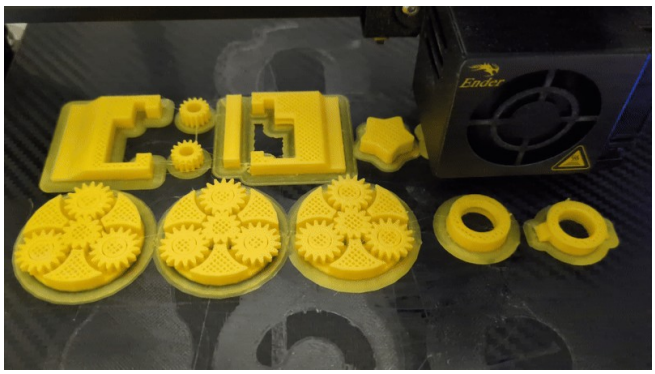 GEAR.stl |

# 5. Discover Robot Movement

**The Pedro Anatomy :** As robotic arm Pedro is equipped with **four servomotors**, each serving a distinct purpose in its movement. Three servomotors control the movement axes, while the fourth servomotor is dedicated to the gripper.

- The **first servomotor** controls the base rotation, facilitating horizontal movement translation.
- The **second servomotor** manages the shoulder, enabling vertical rotation.
- The **third servomotor** operates the elbow, facilitating pick-up movements.
- Finally, **the fourth servomotor** controls the gripper, enabling Pedro to grasp objects securely.

Demonstrate the robot.
Move the different joints.
Explain that Pedro moves like a **human arm**.

| **Robot Joint** | **Similar to Human Body** |
|---|---|
| Base | Shoulder rotation |
| Arm | Upper arm |
| Forearm | Lower arm |
| Gripper | Hand |

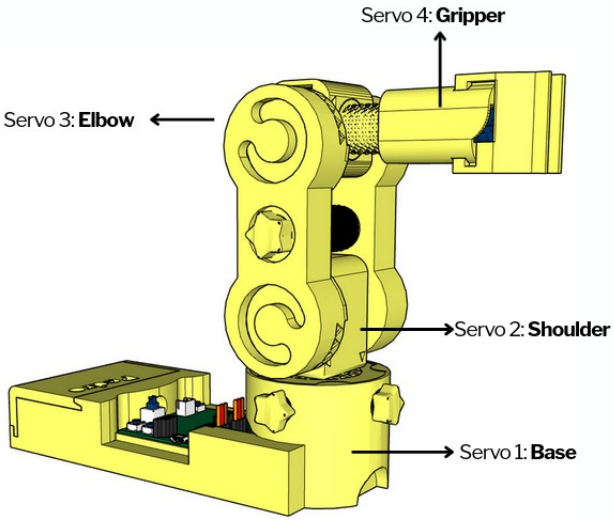


Ask students:

**How many directions can the robot move?**

# 6. Pedro’s First Task

**Setup:**
Place an object on the table.

**Mission:**
Pedro must pick up the object and move it to another location, or simply move some of his axes (base, elbow, gripper, etc.).

**Ask the students:**

- How does Pedro move? → Introduce the concept of **servos**.
- How does Pedro know which axis should move? → Introduce the concept of an **embedded system** and **coding**.

This activity introduces the concept of **robot task planning**.

Robots use **actuators** to move. An actuator converts **energy into motion**. In Pedro, the actuators are **servo motors**. These motors allow the robot to move **with precision**.

Ask students:

- Where are robots used in real life?
- How could robots help people?
- What tasks could Pedro perform?

# 7. Pedro STEM Program Roadmap

Explain the future lessons.

Students will learn how to:

- build Pedro
- understand the Pedro board
- control robot movements
- use Bluetooth and radio communication
- program the robot

# 📝 Quiz - Check Your Understanding

**1. What does the acronym P.E.D.R.O. stand for?**

A) Programmable Electric Device for Robotic Operation
B) Programmable Educational Robot
C) Printed Electronic Design Robotic Object
D) Personal Educational Digital Robot
✅ **Answer:**

**2. What is a robot?**

A) A machine that can perform tasks automatically
B) A type of computer game
C) A human assistant
D) A mobile phone
✅ **Answer:**

**3. What component is the brain of the robot?**

A) Battery
B) Motor
C) Microcontroller
D) Gripper
✅ **Answer:**

**4. What component allows the robot to move?**

A) Sensors
B) Actuators / Motors
C) Battery
D) Frame
✅ **Answer:**

**5. What does the gripper do?**

A) Stores energy
B) Controls the robot
C) Grabs and holds objects
D) Powers the robot
✅ **Answer:**

**6. Why do robots need energy?**

A) To look better
B) To move and operate their components
C) To communicate with humans
D) To change color
✅ **Answer:**

**7. What material is used to print Pedro's parts?**

A) Aluminum
B) PLA or ABS plastic
C) Steel
D) Nylon
✅ **Answer:**

**8. What tool is used to generate 3D printer instructions from a design file?**

A) STL file
B) G-code
C) CAD model
D) Firmware
✅ **Answer:**

**9. What is the first step in 3D printing a part?**

A) Generate G-code
B) Export to STL
C) Design in CAD
D) Print immediately
✅ **Answer:**

**10. What makes Pedro unique in its construction?**

A) It is 100% 3D printed with no screws
B) It uses wooden parts
C) It is laser-cut
D) It is glued together
✅ **Answer:**

**11. What is an actuator?**

A) A device that converts energy into movement
B) A type of sensor
C) A computer screen
D) A robot arm
✅ **Answer:**

**12. What type of robot is Pedro?**

A) Industrial welding robot
B) Educational robotic arm
C) Medical robot
D) Cleaning robot
✅ **Answer:**

**13. Name one real-world use of robotic arms.**

A) Playing video games
B) Assembling cars in factories
C) Charging phones
D) Watching movies
✅ **Answer:**

**14. Why are robots useful?**

A) They can do dangerous or repetitive tasks
B) They replace all humans
C) They only entertain people
D) They only work at night
✅ **Answer:**

**15. What will you learn in the next lessons?**

A) How to program and control the robot
B) How to build a car
C) How to cook
D) How to play music
✅ **Answer:**

---

# END
# Pedro STEM Lesson n°1