STEM Lesson n°1

« Pedro Discover »

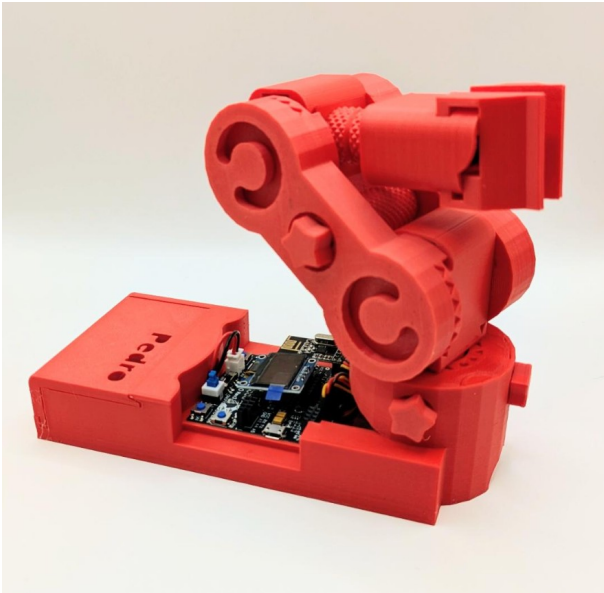

v1.0.2

PDF Tricks
(*To make sure the PDF file that opens in your browser shows the most up-to-date version, add a version query to the URL, like this: https://almtzr.github.io/PedroSTEM/stem_lessons//myfile.pdf?**v=2**)*

🎯 Learning Objective

This lesson introduces students to **P.E.D.R.O the Programmable Educational Robot**, fully 3D-printed, open-source robot designed to make robotics learning fun and hands-on. By the end of this session, students will:

- Understand the basics of **robotics**
- Learn **how 3D printing works** and how robots are designed
- Identify and explain the **main components** of a robot

👨‍🏫 Instructor Notes

- Recommended age: **12 years and older**
- Ideal for **STEM clubs, classroom workshops, or science projects**
- Students should have **basic computer literacy**
- Duration: ~**2 hours**

🧰 Required Materials

Item	Quantity	Description
Pedro Robot Full Kit	10 units	One robot by student
Computer (Windows, Linux, or OS X)	1 or 2 units	With Arduino IDE installed

🧩 Final Activity

At the end of the workshop:

- Students complete a **30-question quiz** to review key concepts.
- Teachers can discuss real-world applications of robotics and 3D printing.

Table of Contents

🎯 Learning Objective.....2
👨‍🏫 Instructor Notes.....2
🧰 Required Materials.....2
🧩 Final Activity.....2
1. Materials Check.....4
2. Pedro Design.....5
2.1 The Pedro Anatomy.....5
2.2 Planetary Gear System.....6
2.3 Why use a planetary system on Pedro?.....7
3. What Is 3D Printing?.....7
4. Quiz (14 Questions).....9

1. Materials Check

Make sure you have all the parts before starting the assembly.
Check all the parts by putting an ✅ next to each part of Pedro robot.

✅ All Pedro 3D printed parts
✅ Pedro Rev3 Electronic Board
✅ 2 ball bearings **8x22x7 mm**
✅ 4 continuous rotation (**360**°) servomotors
✅ 7.4V DC battery

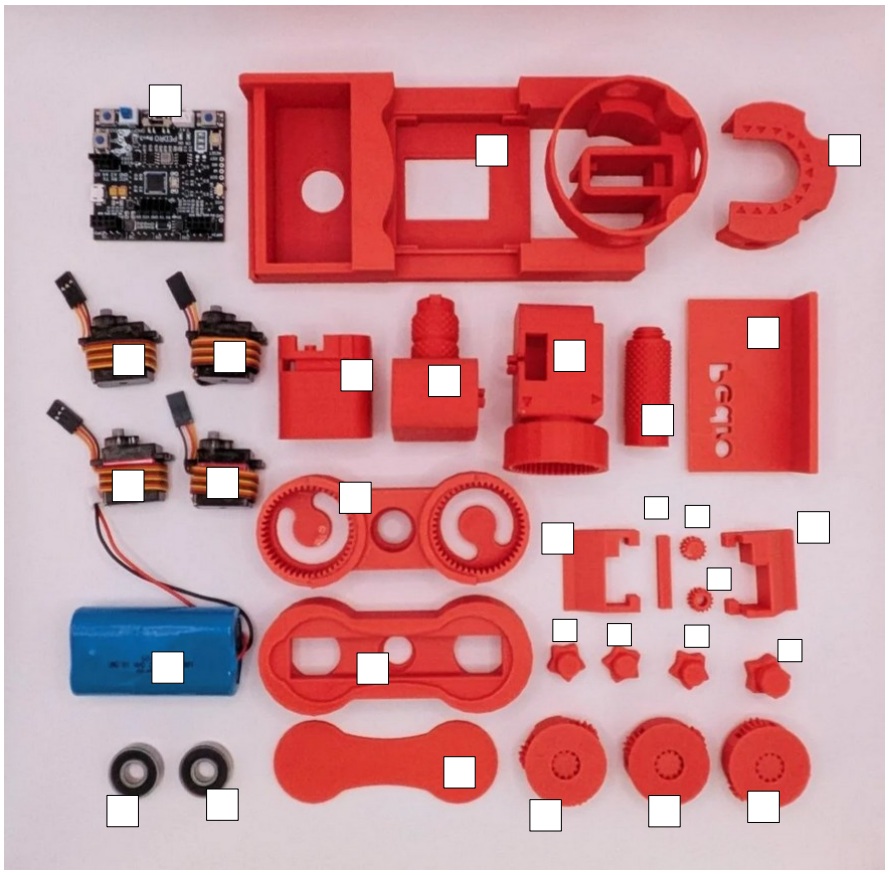

Figure 1

💡 <u>What You Should Know About Pedro</u>

All the parts of Pedro are 3D printed. As you can see, there are no screws in the pieces that make up Pedro. Which makes Pedro a 100% 3D-printed robot.

2. Pedro Design

2.1 The Pedro Anatomy

As robotic arm Pedro is equipped with **four servomotors**, each serving a distinct purpose in its movement. Three servomotors control the movement axes, while the fourth servomotor is dedicated to the gripper.

- The **first servomotor** controls the base rotation, facilitating horizontal movement translation.
- The **second servomotor** manages the shoulder, enabling vertical rotation.
- The **third servomotor** operates the elbow, facilitating pick-up movements.
- Finally, the **fourth servomotor** controls the gripper, enabling Pedro to grasp objects securely.

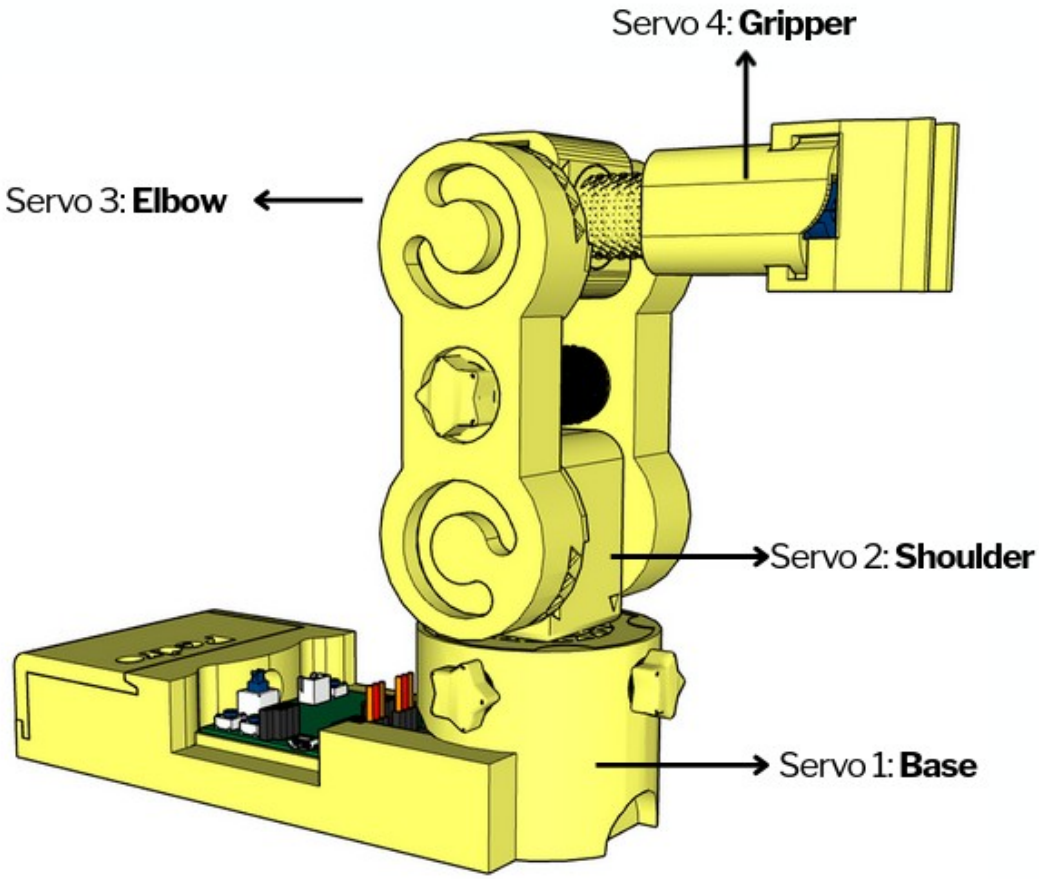

Figure 2: Pedro

Together, these servomotors enable Pedro to perform a wide range of precise and coordinated movements, making it an effective tool for various robotic applications.

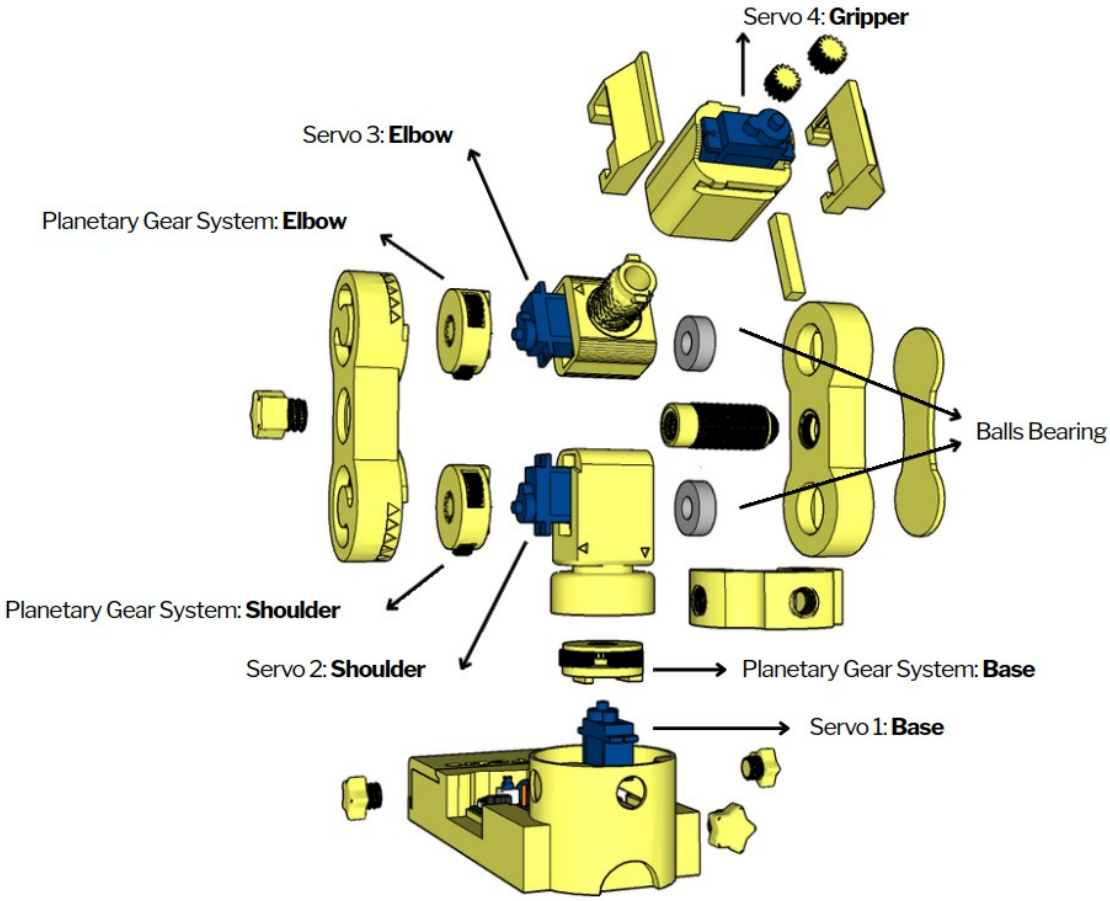

Figure 3: Pedro Robot Splittted

2.2 Planetary Gear System

Pedro features three planetary motion modules, fully 3D-printed. These modules enable smooth and precise movements, powered by a continuous servomotor motor placed at the center of each joint.

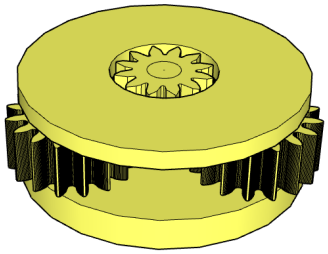

Figure 4: Planetary gear system

A planetary gearbox is a gear mechanism that optimizes motion transmission by reducing speed and increasing torque. It consists of:

⚙️ The sun gear: the central gear (driven by the motor)
⚙️ The planet gears: three gears rotating around the sun
⚙️ The ring gear (here replaced by Pedro's structure), holding everything together

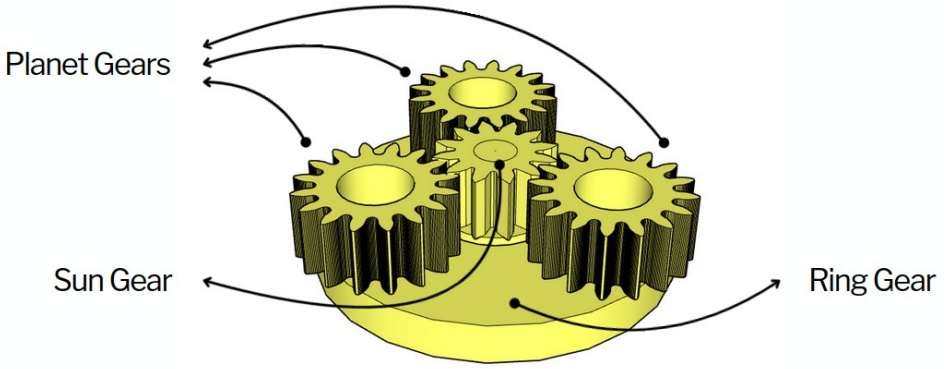

Figure 5: Planetary gear system

2.3 Why use a planetary system on Pedro?

✅ Increased power and precision
✅ Compact and robust design
✅ Fully 3D-printable with no complex parts

This system allows Pedro to execute smooth and precise movements in its three main joints: the base, shoulder, and elbow. No screws, no glue just 100% 3D printed.

3. What Is 3D Printing?

3D printing is a technology that allows us to create solid objects by **melting and layering plastic filament (PLA or ABS)**. Before printing a part, several important steps are needed:

1. **Design (CAD):**
   The first step is to design the part using a **CAD (Computer-Aided Design)** software. This program lets us draw the object in **three dimensions** on a computer.
2. **Export to STL:**
   Once the design is finished, it is **converted into an STL file**. This file describes the shape of your object using **a set of precise coordinates and numbers**.
3. **Generate the G-code:**
   The STL file is then converted into a **G-code file**. G-code contains the exact **instructions the**

3D printer follows to create the part **layer by layer**. Usually, the G-code is **saved on a microSD card**, which is then inserted into the 3D printer to start printing.

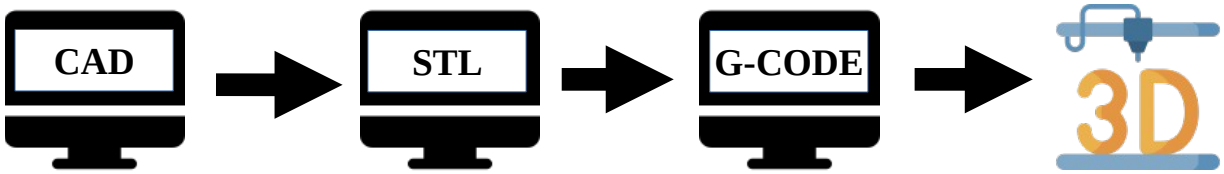

Only four STL files available on the Pedro Github repo (https://github.com/almtzr/Pedro) allow to print entirely the Pedro robot as described on the following image above:

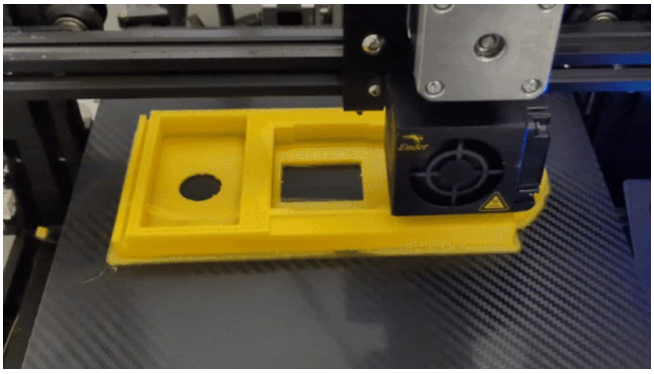 BASE.stl	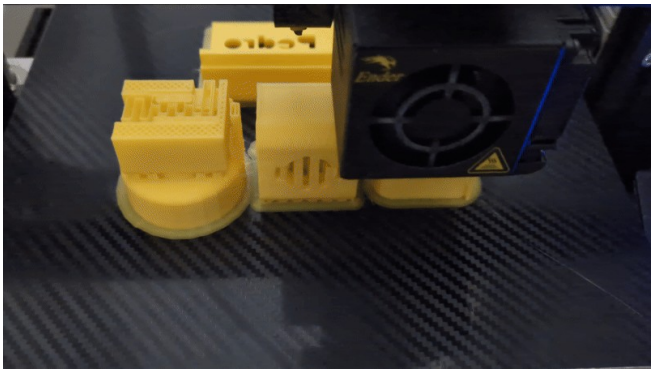 SERVO.stl
ARM.stl	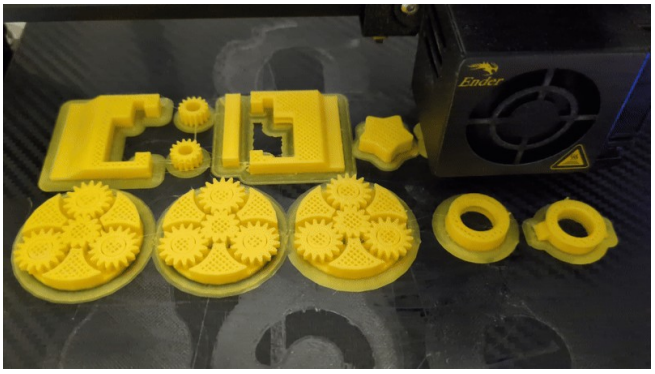 GEAR.stl

4. Quiz (14 Questions)

1. What does the acronym P.E.D.R.O. stand for?
A) Programmable Electric Device for Robotic Operation
B) Programmable Educational Robot
C) Printed Electronic Design Robotic Object
D) Personal Educational Digital Robot
✅ **Answer:**

2. What is the main goal of the Pedro Lesson 1?
A) Build a drone
B) Discover the Pedro robot
C) Learn 3D modeling only
D) Program a mobile app
✅ **Answer:**

3. What kind of motor does Pedro use?
A) Stepper motors
B) Brushed DC motors
C) Continuous rotation servomotors (360°)
D) Hydraulic actuators
✅ **Answer:**

4. How many servomotors are used in Pedro?
A) 2
B) 3
C) 4
D) 5
✅ **Answer:**

5. What is the purpose of the first servomotor?
A) Controls the gripper
B) Controls the base rotation for horizontal movement
C) Controls the shoulder
D) Controls the elbow
✅ **Answer:**

6. What does the fourth servomotor control?
A) The base
B) The shoulder
C) The elbow
D) The gripper
✅ **Answer:**

7. What material is used to print Pedro's parts?
A) Aluminum
B) PLA or ABS plastic
C) Steel
D) Nylon
✅ **Answer:**

8. What tool is used to generate 3D printer instructions from a design file?
A) STL file
B) G-code
C) CAD model
D) Firmware
✅ **Answer:**

9. What is the first step in 3D printing a part?
A) Generate G-code
B) Export to STL
C) Design in CAD
D) Print immediately
✅ **Answer:**

10. What makes Pedro unique in its construction?
A) It is 100% 3D printed with no screws
B) It uses wooden parts
C) It is laser-cut
D) It is glued together
✅ **Answer:**

11. What type of bearing system does Pedro use?
A) Magnetic bearings
B) Ball bearings
C) Roller bearings
D) Gear bearings
✅ **Answer:**

12. What is the purpose of the planetary gear system in Pedro?
A) To reduce torque and increase speed
B) To increase torque and improve precision
C) To provide electrical power
D) To connect sensors
✅ **Answer:**

13. How many planetary motion modules does Pedro have?
A) 1
B) 2
C) 3
D) 4
✅ **Answer:**

14. Which gear in the planetary system is driven by the motor?
A) The planet gear
B) The sun gear
C) The ring gear
D) The outer shell
✅ **Answer:**

END
Pedro STEM Lesson n°1