STEM Lesson n°4

Manual Mode

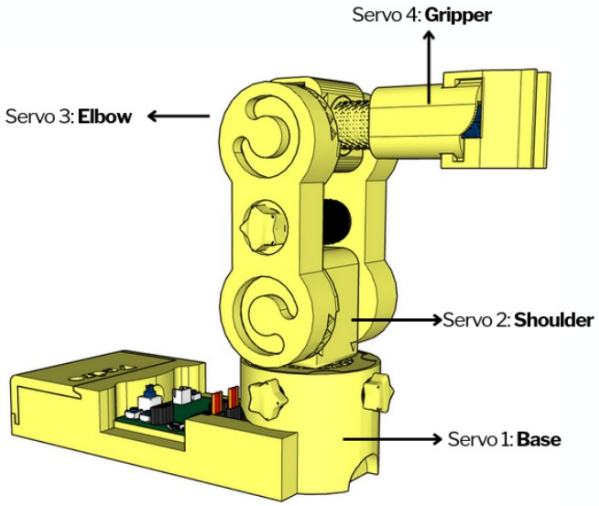

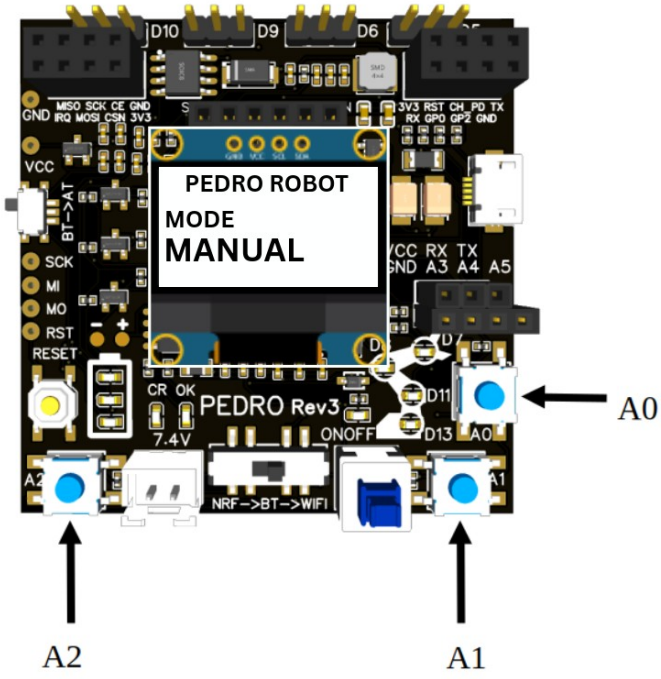

v1.0.0

PDF Tricks

(To make sure the PDF file that opens in your browser shows the most up-to-date version, add a version query to the URL, like this:

🎯 Learning Objective

Manual Mode is the simplest way to control a robot. Instead of wireless signals, the robot reacts instantly to button input. By using Manual Mode, students will understand:

- How user input controls a robot
- How programs make decisions
- How electrical signals control motors
- The concept of a continuous loop

👨‍🏫 Instructor Notes

- Recommended age: 12+
- Difficulty Level: Beginner → Intermediate
- Prerequisites: Lesson 1, Lesson 2 and Lesson 3
- Duration: 90 – 120 minutes

🧰 Required Materials

Per student or team:

- Pedro Robot Assembled
- USB cable
- Computer with Arduino IDE installed

Table of Contents

🎯 Learning Objective..... 2
🧑‍🏫 Instructor Notes..... 2
🧰 Required Materials..... 2
1. Install the Pedro Program (Skip this step if already completed in Lesson n°3)..... 4
2. Control Modes Overview..... 5
3. Manual Mode..... 6
4. Understanding Manual Mode (From Button Press to Robot Movement)..... 6
4.1 Concept Overview..... 6
4.2 Step-by-Step Explanation..... 7
4.3 Continuous Loop (Important Concept)..... 8
5 Classroom Analogy..... 8
6 Hands-On Experiment..... 8

1. Install the Pedro Program
(Skip this step if already completed in Lesson n°3)

The **Pedro Program** is the core software that powers and controls the robot. It acts as the robot's "brain," managing all behaviors and interactions.
Through this single program, students can access and explore multiple control modes, allowing them to understand how a robot receives instructions, processes them, and translates them into physical actions.

1. **Download and install** the latest version of the Arduino IDE.
2. **Install the required libraries** from the Library Manager:
   - PedroRobot: Tools → Manage Libraries → search PedroRobot → Install
   - U8glib: Tools → Manage Libraries → search U8glib → Install
   - RF24: `Tools → Manage Libraries → search` **`RF24`** `→ Install`
3. **Insert** the Oled Screen into the Pedro board and **Connect** the board to your computer via USB.
4. **Select the correct port**:
   - Tools → Select the port that appear when you connect Pedro robot
5. **Select the board type**:
   - Tools → Board → Arduino Micro
6. **Open the example sketch**:
   - File → Examples → PedroRobot → Pedro
7. **Compile and upload** the sketch to your Pedro board.

   ✅ *If everything is correct, Pedro's OLED screen will display "MANUAL MODE".*

8. Press the button **A0** and observe what happen.
   The LED corresponding to the selected servo light on. That button allows you to control each part of the robot. Here is the mapping between the LED ID and the servo ID

   - `LED D13 → servo D5 (Base)`
   - `LED D11 → servo D6 (Shoulder)`
   - `LED D8  → servo D9 (Elbow)`
   - `LED D7  → servo D10 (Gripper)`

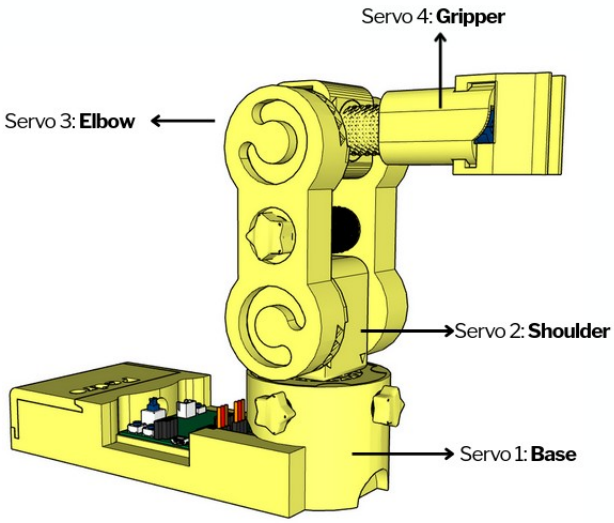

2. Control Modes Overview

Using the **128x64 OLED display**, users can easily navigate through the menu to **select and configure** different modes of operation. The available control modes are:

- **Manual Mode** – direct control using onboard buttons
- **Record & Replay Mode** – record and replay movements
- **Bluetooth Mode** – control Pedro via smartphone or PC
- **Radio Mode** – remote communication between robots
- **USB Serial Mode** – control Pedro directly from a computer

Through this firmware, students discover how software can define robotic behavior and how multiple communication interfaces can coexist within one system. The picture below described how to navigate through the multiple control modes.

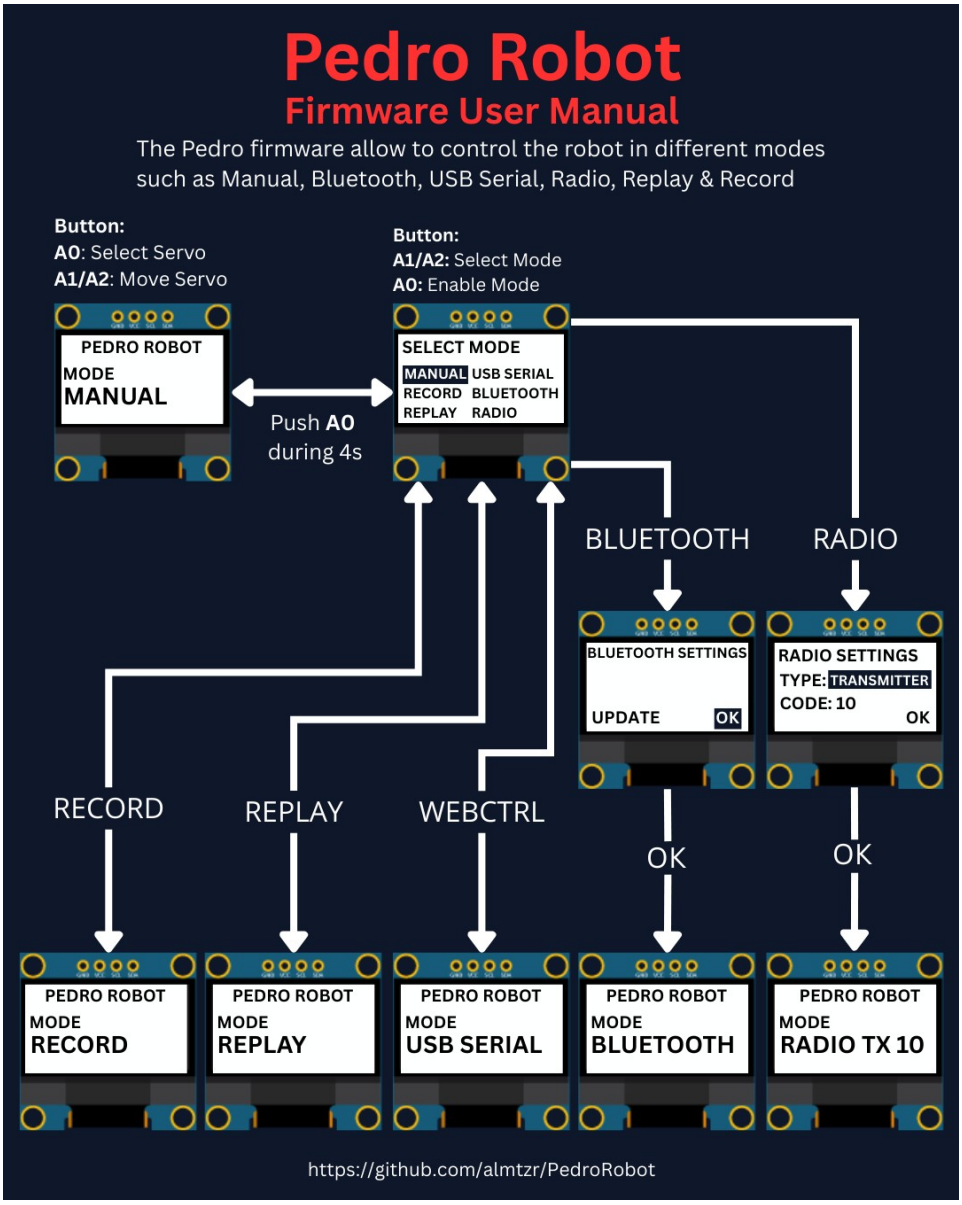

3. Manual Mode

What it does: Direct control of servo motors using onboard buttons.
How to use:

1. Power **ON** Pedro (default mode **Manual**).
2. Press the button **A0** to select the servo.
   The LED corresponding to the selected servo light on. That button allows you to control each part of the robot. Here is the mapping between the LED ID and the servo ID :
   - `LED D13 → servo D5 (Base)`
   - `LED D11 → servo D6 (Shoulder)`
   - `LED D8  → servo D9 (Elbow)`
   - `LED D7  → servo D10 (Gripper)`
3. Use button **A1** to Move Servo to Left.
4. Use button **A2** to Move Servo to Right.

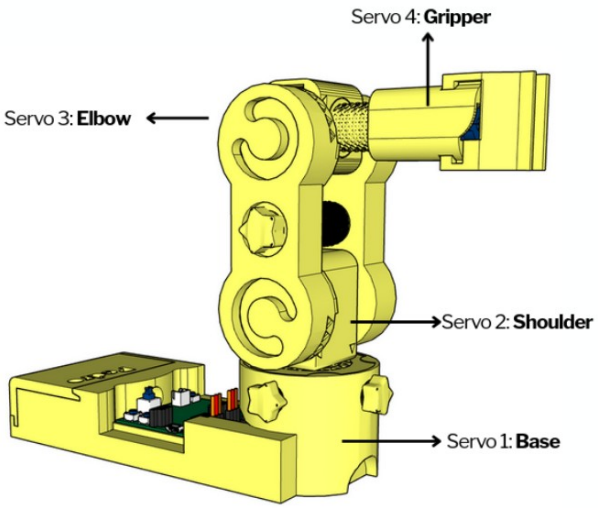

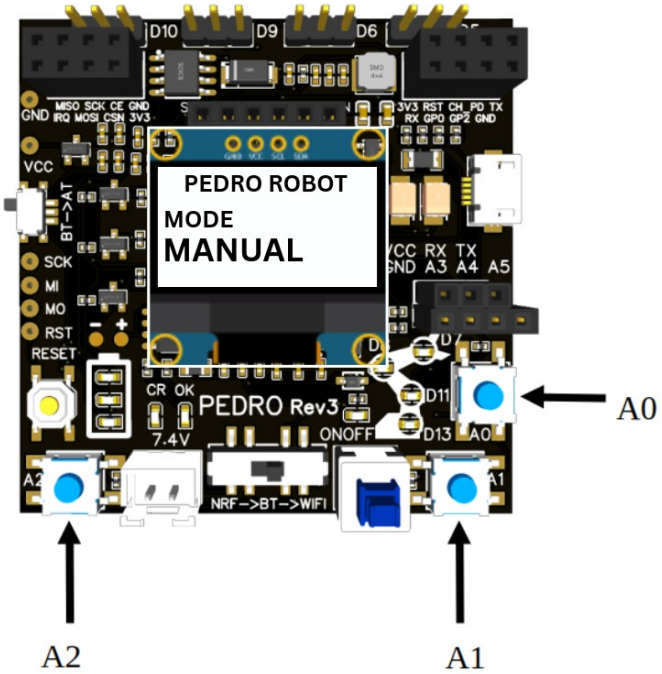

4. Understanding Manual Mode (From Button Press to Robot Movement)

4.1 Concept Overview

When you press a button on Pedro, the robot does not move instantly by magic.

There is a complete chain of actions inside the system:

Button → Program → Microcontroller → Signal → Servo → Movement
Understanding this chain is essential to learning how robots work.

4.2 Step-by-Step Explanation

① Button Press (User Input)

When you press a button (for example A1):

- The button sends an electrical signal
- ON (HIGH) → button pressed
- OFF (LOW) → button released

👉 This is how the robot receives input from the user.

② Microcontroller Reads the Button

The microcontroller (the “brain” of Pedro) continuously checks the buttons.

In Arduino, this looks like:

```
if (digitalRead(A1) == HIGH) {
    // button is pressed
}
```

👉 Meaning:
“If the button is pressed, then execute an action.”

③ Program Decision

The program decides what to do.

In Manual Mode, it changes the servo position:

```
angle = angle + 1;
servo.write(angle);
```

👉 Meaning:

- Increase the angle
- Send the new position to the servo

④ Signal Sent to the Servo

The microcontroller sends a special signal called:

👉 **PWM (Pulse Width Modulation)**

This signal tells the servo: “Move to this position”

⑤ Servo Movement

The servo receives the signal and rotates.

👉 Result:

- Button A1 → move left
- Button A2 → move right

4.3 Continuous Loop (Important Concept)

All of this happens inside a loop:

```
void loop() {
   read button
   decide action
   send signal
}
```

👉 This loop runs **hundreds of times per second**.

That is why the robot reacts instantly.

5 Classroom Analogy

Think of the system like this:

- The **button** is the messenger
- The **program** is the brain
- The **servo** is the muscle

6 Hands-On Experiment

Try this:

1. Hold button A1 → servo moves continuously
2. Release the button → movement stops
3. Alternate A1 and A2 → servo oscillates

👉 Question for students:
Why does the servo stop when you release the button?

Answer:
Because the program no longer receives an instruction. (digitalRead(A1) == LOW)

END
Pedro Lesson n°4