STEM Lesson n°2

« Pedro Board »

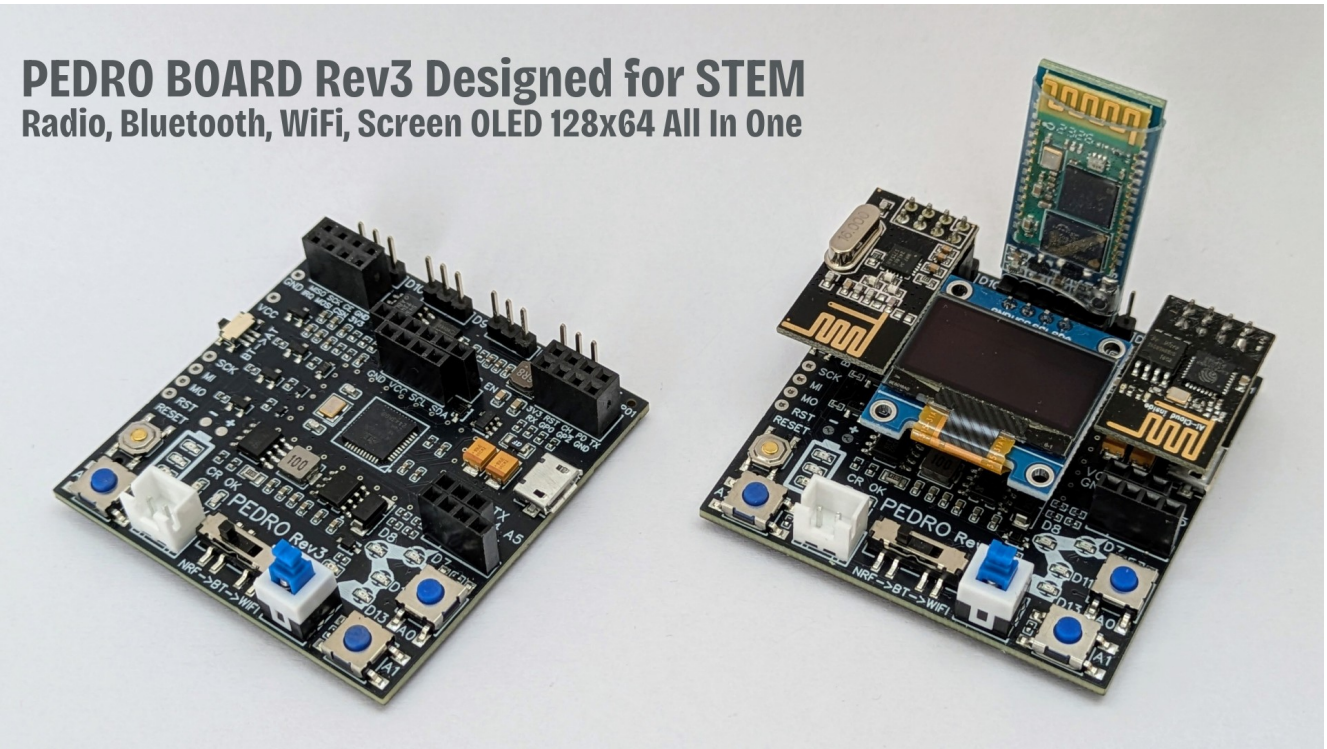

v1.0.2

PDF Tricks
*(To make sure the PDF file that opens in your browser shows the most up-to-date version, add a version query to the URL, like this: https://almtzr.github.io/PedroSTEM/stem_lessons/Pedro_Lesson_2.pdf?**v=2**)*

🎯 Learning Objective

In this lesson, students discover the **Pedro Board**, the electronic brain that controls the Pedro robot. They will explore how **hardware and software interact** in an embedded system and learn how engineers design robotic control boards.
Students will also upload their f**irst Arduino program** and interact with the robot's components.

By the end of this lesson, students will be able to:

- Understand what a microcontroller is and why it is used in robotics.
- Identify the main components of a robotics control board.
- Explain the concept of an embedded system.
- Upload and run a program using the Arduino IDE.
- Interact with the Pedro board's LEDs, buttons and servos.
- Understand how robots communicate using radio, Bluetooth and Serial communication.

👨‍🏫 Instructor Notes

- Recommended age: 12+
- Difficulty Level : Beginner → Intermediate
- Prerequisites : Basic computer use + Basic understanding of robots (Lesson 1)
- Duration: 90 – 120 minutes

🧰 Required Materials

Per student or team:

- Pedro Robot Kit
- Computer with Arduino IDE installed

🧩 Final Activity

At the end of the workshop:

- Students complete a **quiz** to review key concepts.
- Teachers can discuss real-world applications of robotics and 3D printing.

Table of Contents

🎯 Learning Objective.....2
👩‍🏫 Instructor Notes.....2
🧰 Required Materials.....2
🧩 Final Activity.....2
1. The Pedro Board.....4
1.1 Main Features.....4
1.2 STEM Insight.....4
1.3 Identify Each Element of the Pedro Board:.....5
PART 1 : Identification of Non-Programmable Elements.....6
PART 2 : Identification of Programmable1 Elements.....7
PART 3 : Identification of Connectors.....8
2. Arduino Programming.....9
📝 Quiz — Check Your Understanding.....10

1. The Pedro Board

The **Pedro Board** is the brain of the robot. It is an **Arduino-compatible microcontroller board (ATmega32u4)** specially designed for the Pedro robot. It connects and controls all of Pedro's parts from the motors to the sensors and communication modules.

In robotics, this type of board is called a **control system**.

1.1 Main Features

- Arduino Micro compatible – easy to program with the Arduino IDE
- 4 servo motor outputs – control the arm, base, and gripper
- Integrated OLED screen (128×64) – displays mode, messages, and feedback in real time
- Wireless communication ports for:
  - nRF24L01 (radio control)
  - HC-05 (Bluetooth connection)
  - ESP8266-01 (WiFi / IoT mode)
- Micro USB port – for programming and USB Serial mode
- Built-in battery charger – for a 7.4V Li-ion or LiPo battery
- Serial RX/TX pins – for external module or debugging

1.2 STEM Insight

The Pedro Board introduces students to **embedded systems**, where hardware and software work together to make intelligent machines. It's a perfect platform to **learn electronics, communication protocols, and real-world engineering design**.

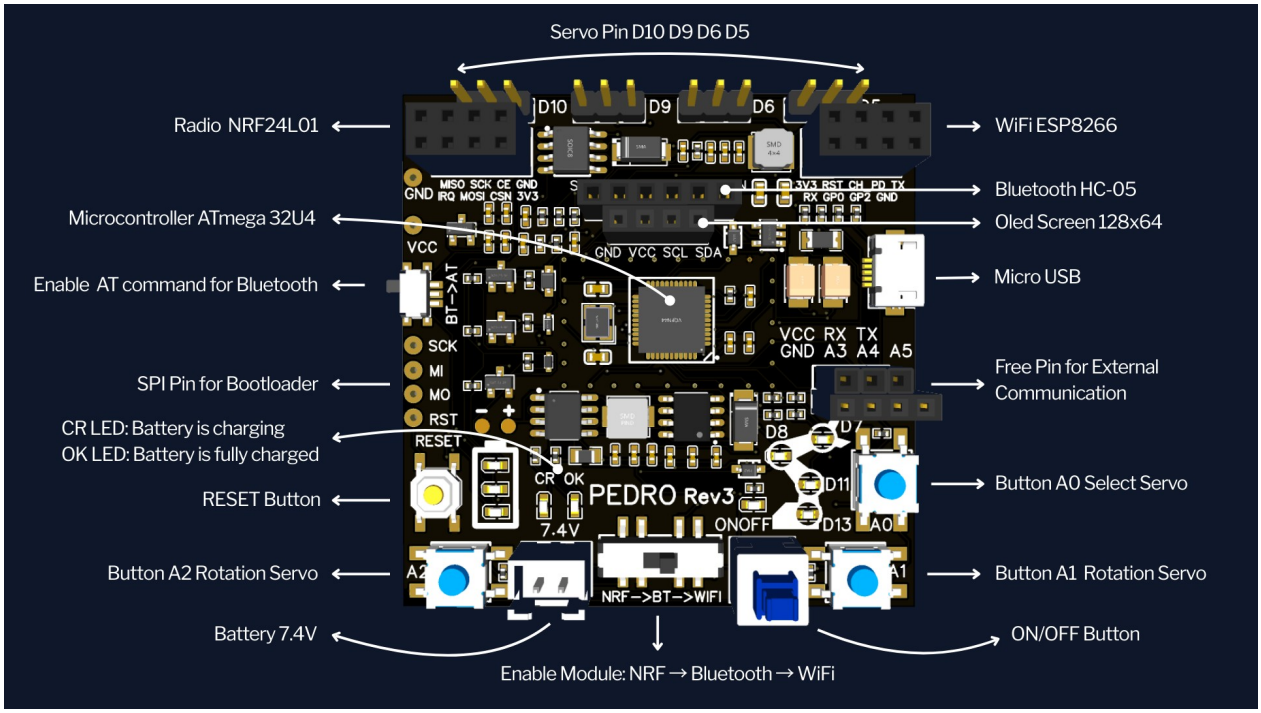

Examples of embedded systems: cars, washing machines, drones, robots, smart home devices.

The Pedro robot is a **perfect example of an embedded system** because its electronics and software work together to control mechanical parts.

The Pedro Board includes many useful features.

- Microcontroller (ATmega32U4): Acts as the brain of the robot
- Servo Motor Outputs : 4 outputs used to control (Base, Shoulder, Elbow, Gripper)
- OLED Display 128 × 64 screen used to display: robot mode, messages, feedback
- Wireless Communication, Pedro supports three communication technologies:
  - Radio Control – NRF24L01
  - Bluetooth – HC-05
  - WiFi / IoT – ESP8266-01
- USB Port Used for: programming the robot, charging the battery, serial communication with a computer

1.3 Identify Each Element of the Pedro Board:

Students work in small groups and try to identify the elements on the board.

Teacher can display the board on a projector or printed sheet.

Students must locate: microcontroller, LEDs, buttons, servo connectors, USB port, battery connector, communication modules

This activity develops **engineering observation skills**.

PART 1 : Identification of Non-Programmable Elements

1 Button ON/OFF	2 LED ON/OFF	3 LED CR[1]	4 LED OK[2]
5 3x LEDs Battery[3]	6 Reset Button	7 Switch radio → bluetooth → wifi	8 Switch Command AT Bluetooth

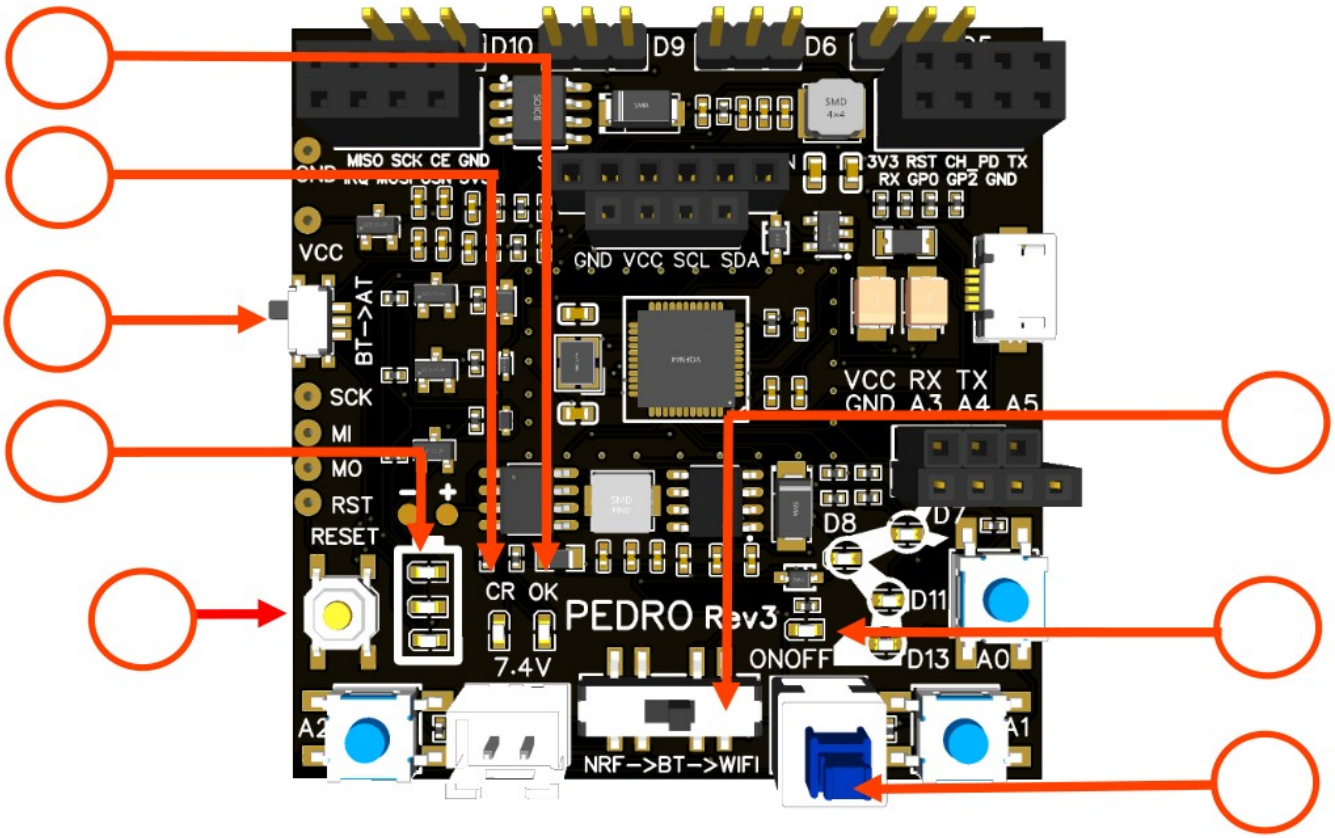

1. **LED CR** : Indicates that the battery is currently **charging**.
2. **LED OK** : Indicates that the battery is **fully charged**.
3. **Battery Level LEDs:** Show the **battery charge level** from bottom to top (**25%, 50%, and 100%)**.

PART 2 : Identification of Programmable1 Elements

1 LED Base D13	2 LED Shoulder D11	3 LED Elbow D8	4 LED Gripper D7
5 Pin Servo Base D5	6 Pin Servo Shoulder D6	7 Pin Servo Elbow D9	8 Pin Servo Gripper D10
9 Button A0 Select Servo	10 Button A1 Rotation Servo	11 Button A2 Rotation Servo	12 Microcontroller (the brain)

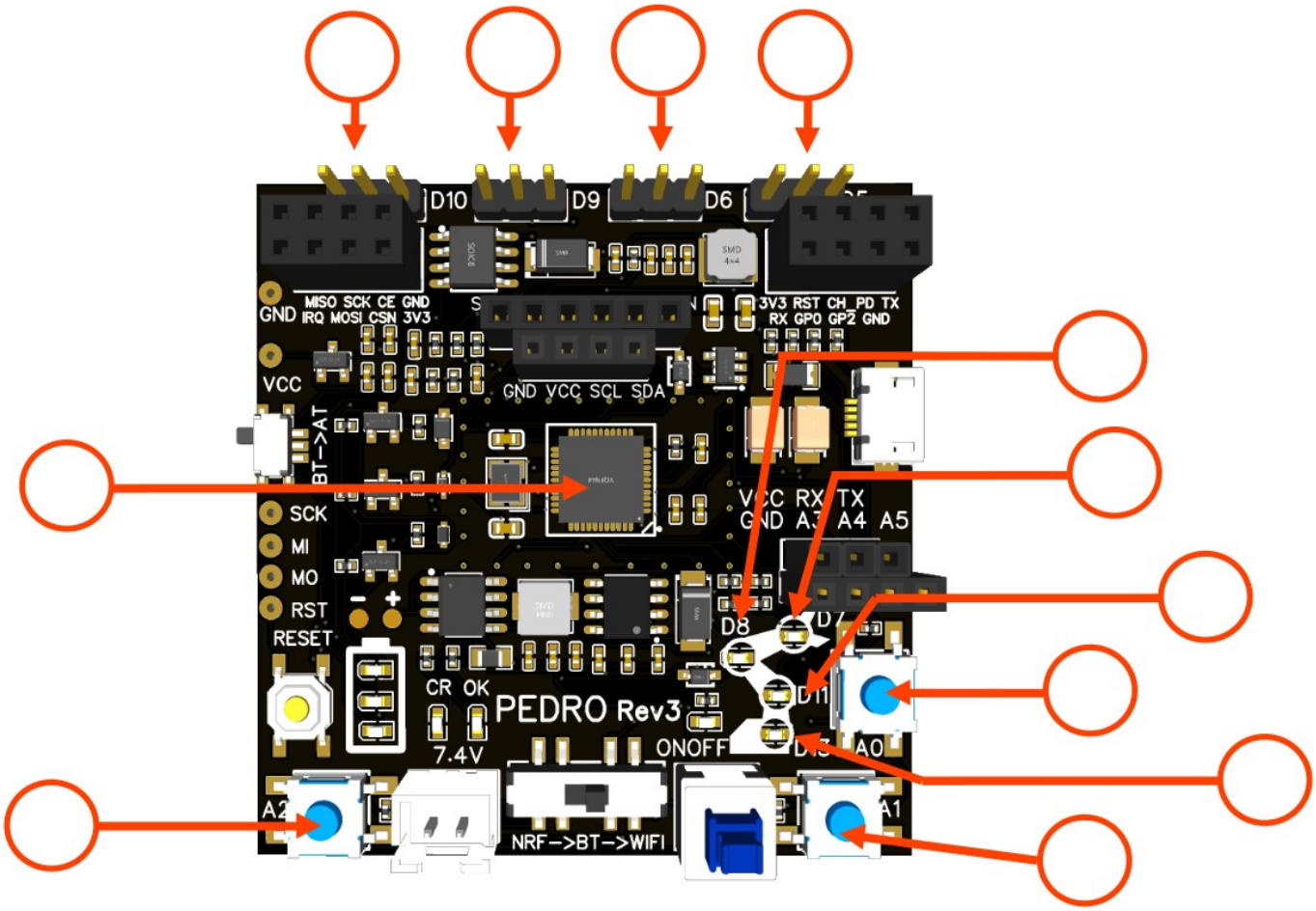

[1.] A **programmable element** is a component on the electronic board that can be **controlled by programming the microcontroller**. This can include **buttons**, **LEDs**, or **input/output pins**.

PART 3 : Identification of Connectors

1 Module Radio	2 Module WiFi	3 Module Bluetooth	4 OLED Screen 128x64
5 7.4 V Battery Connector	6 Pin RX TX A4 A4 A5[1]	7 Port micro USB[2]	8 Pin Bootloader[3]

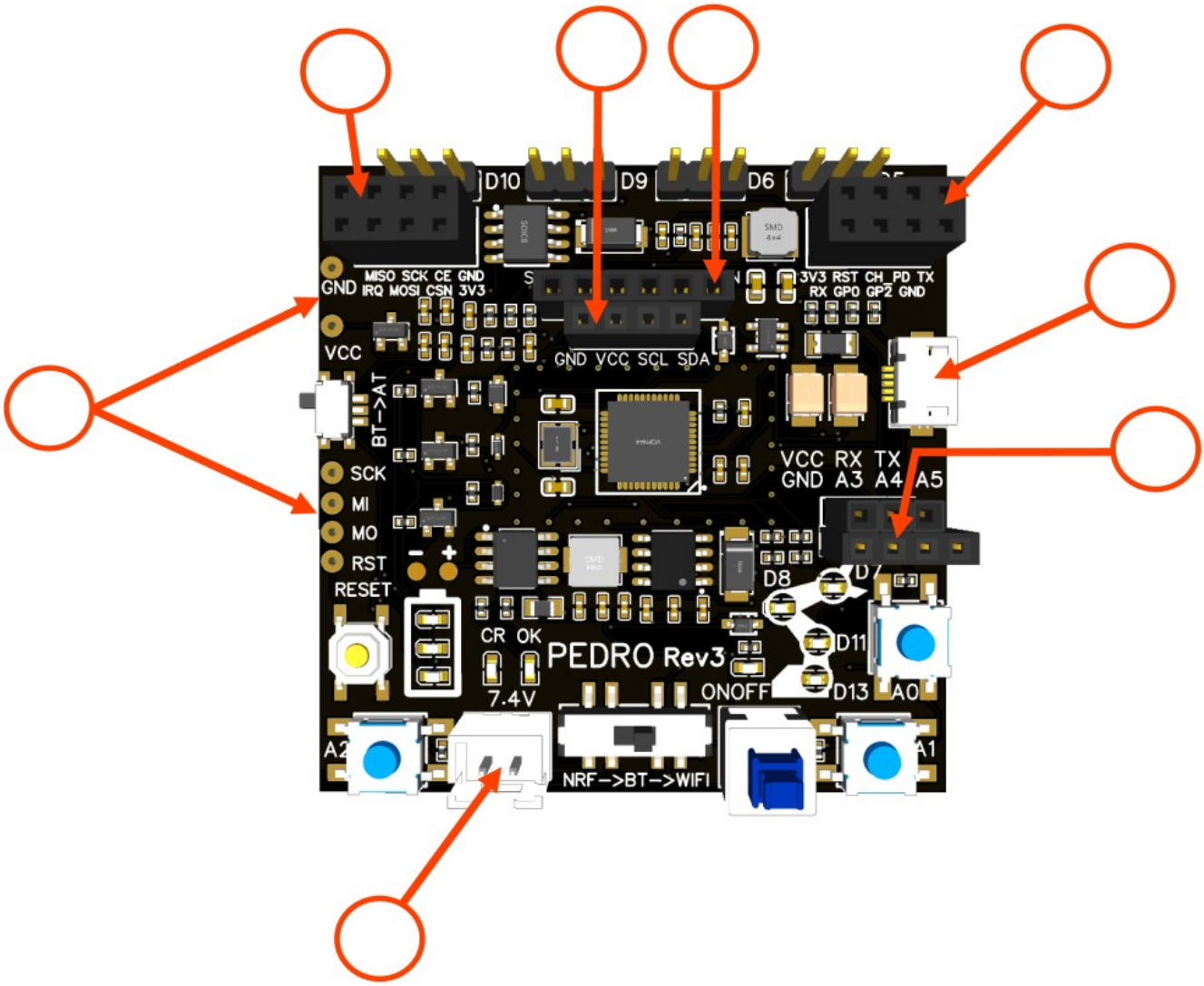

The pins **RX, TX, A3, A4, and A5** allow Pedro to **communicate with external devices**, such as an Arduino board, another Pedro robot, or components on a **breadboard** (e.g., a button or an LED).
The **USB port** has **three main functions**:

1. **Programming** the board
2. **Charging** the battery
3. **Controlling** the Pedro robot via a **graphical interface**

2. Arduino Programming

1. **Download and install** the latest version of the Arduino IDE.
2. **Install the required libraries** from the Library Manager:
   - **`PedroRobot`**: `Tools → Manage Libraries → search` **`PedroRobot`** `→ Install`
   - **`U8glib`**: `Tools → Manage Libraries → search` **`U8glib`** `→ Install`
   - **`RF24`**: `Tools → Manage Libraries → search` **`RF24`** `→ Install`
3. **Insert** the Oled Screen into the Pedro board and **Connect** the board to your computer via USB.
4. **Select the correct port**:
   - Tools → Select the port that appear when you connect Pedro robot
5. **Select the board type**:
   - Tools → Board → Arduino Micro
6. **Open the example sketch**:
   - File → Examples → PedroRobot → Pedro
7. **Compile and upload** the sketch to your Pedro board.

   ✅ *If everything is correct, Pedro's OLED screen will display "MANUAL MODE".*

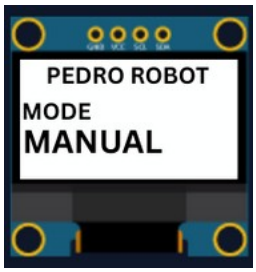

8. Press the button **A0** and observe what happen.
   The LED corresponding to the selected servo light on. That button allows you to control each part of the robot. Here is the mapping between the LED ID and the servo ID

   - `LED D13 → servo D5 (Base)`
   - `LED D11 → servo D6 (Shoulder)`
   - `LED D8  → servo D9 (Elbow)`
   - `LED D7  → servo D10 (Gripper)`

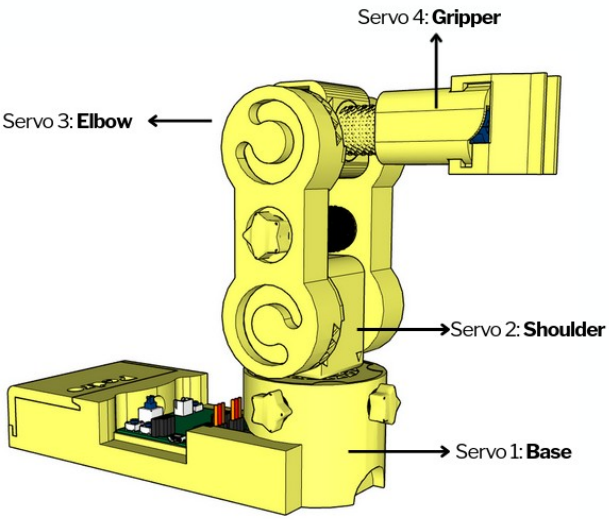

📝 Quiz — Check Your Understanding

1. What type of microcontroller powers Pedro?
A) ATmega32U4
B) ESP32
C) Raspberry Pi
D) STM32
✅ **Answer:**

2. What software is required to program Pedro?
A) Visual Studio
B) Arduino IDE
C) Python
D) MATLAB
✅ **Answer:**

3. What component allows Pedro to communicate wirelessly over long distances?
A) NRF24L01 module
B) Wi-Fi router
C) GPS module
D) Ultrasonic sensor
✅ **Answer:**

4. Which module enables Pedro to connect to Wi-Fi ?
A) HC-05 Bluetooth module
B) ESP8266-01 module
C) NRF24L01 module
D) GPS module
✅ **Answer:** B

5. What is the screen resolution of Pedro's OLED display?
A) 64x64
B) 128x32
C) 128x64
D) 256x128
✅ **Answer:**

6. Which component represents the "brain" of the Pedro board?
A) The OLED Display
B) The ATmega32u4 Microcontroller
C) The Battery Charger
D) The NRF24L01 Radio Module
✅ **Answer:**

7. What type of display is integrated into the Pedro Board?
A) LCD 16x2
B) OLED 128x64
C) TFT 2.4"
D) LED matrix
✅ **Answer:**

8. What function does the Micro USB port serve?
A) Power only
B) Programming, charging, and serial control
C) Bluetooth pairing
D) WiFi connection
✅ **Answer:**

9. Which module provides WiFi capability?
A) NRF24L01
B) HC-05
C) ESP8266-01
D) GPS module
✅ **Answer:**

19. What does the ATmega32u4 allow students to do?
A) Design 3D parts
B) Program the robot using Arduino IDE
C) Print STL files
D) Connect motors directly
✅ **Answer:**

11. Which component shows the battery charge level?
A) LED CR
B) LED OK
C) Battery Level LEDs
D) OLED screen
✅ **Answer:**

12. What does the LED "CR" indicate?
A) Bluetooth connected
B) Battery charging
C) Low voltage
D) Power OFF
✅ **Answer:**

13. What switch is used to select between NRF, BT, and WiFi?
A) Power switch
B) Communication switch
C) Mode button
D) Servo selector
✅ **Answer:**

14. What is the purpose of the RX/TX pins?
A) Power the LEDs
B) Enable serial communication
C) Control servos
D) Connect battery
✅ **Answer:**

15. What kind of system is the Pedro Board a good example of?
A) Mechanical system
B) Embedded system
C) Hydraulic system
D) Optical system
✅ **Answer:**

END
Pedro STEM Lesson n°2