STEM Lesson n°2

« Pedro Board »

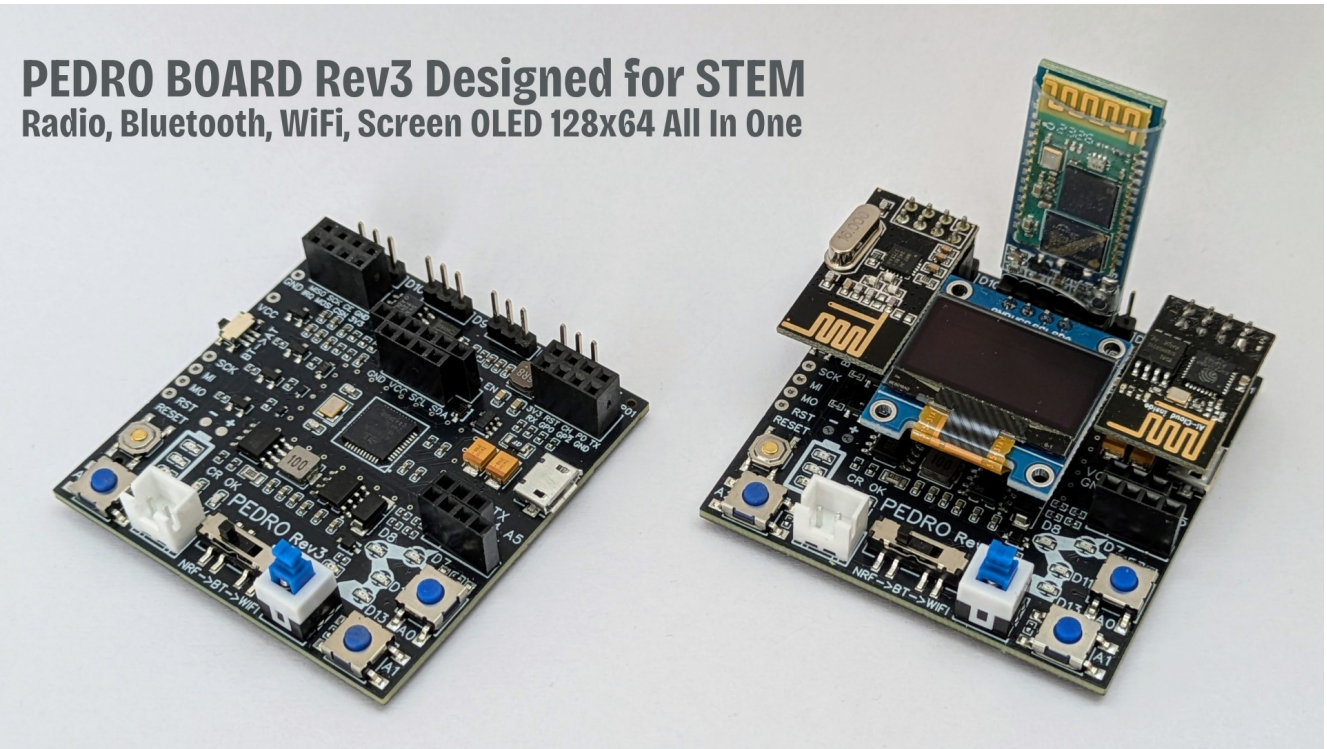

v1.0.3

PDF Tricks
*(To make sure the PDF file that opens in your browser shows the most up-to-date version, add a version query to the URL, like this: https://almtzr.github.io/PedroSTEM/stem_lessons/Pedro_Lesson_2.pdf?**v=2**)*

🎯 Learning Objective

In this lesson, students discover the **Pedro Board**, the electronic brain that controls the Pedro robot. They will explore how **hardware and software interact** in an embedded system and learn how engineers design robotic control boards.
Students will also upload their f**irst Arduino program** and interact with the robot's components.

By the end of this lesson, students will be able to:

- Understand what a microcontroller is and why it is used in robotics.
- Identify the main components of a robotics control board.
- Explain the concept of an embedded system.
- Upload and run a program using the Arduino IDE.
- Interact with the Pedro board's LEDs, buttons and servos.
- Understand how robots communicate using radio, Bluetooth and Serial communication.

👨‍🏫 Instructor Notes

- Recommended age: 12+
- Difficulty Level : Beginner → Intermediate
- Prerequisites : Basic computer use + Basic understanding of robots (Lesson 1)
- Duration: 90 – 120 minutes

🧰 Required Materials

Per student or team:

- Pedro Board Rev3
- USB cable
- OLED Screen 128x64
- Computer with Arduino IDE installed

Table of Contents

🎯 Learning Objective.....2
👩‍🏫 Instructor Notes.....2
🧰 Required Materials.....2
1. The Pedro Board.....4
1.1 Main Features.....4
1.2 STEM Insight.....4
1.3 Identify Each Element of the Pedro Board:.....5
PART 1 : Identification of Non-Programmable Elements.....6
PART 2 : Identification of Programmable Elements.....7
PART 3 : Identification of Connectors.....8
2. Programming Activities – Discover Embedded Systems.....9
2.1 Install the Pedro Library.....9
2.2 Important Rule.....9
ACTIVITIES:.....10
1. First LED (Hello Pedro).....10
2. Blink LED.....10
3. Moving LEDs.....11
4. Button Controls LED.....12
5. Multiple Buttons.....12
6. Toggle LED.....13
7. Reaction Game.....14
8. Secret Code.....14
📝 Quiz — Check Your Understanding.....15

1. The Pedro Board

The **Pedro Board** is the brain of the robot. It is an **Arduino-compatible microcontroller board (ATmega32u4)** specially designed for the Pedro robot. It connects and controls all of Pedro's parts from the motors to the sensors and communication modules.

In robotics, this type of board is called a **control system**.

1.1 Main Features

- Arduino Micro compatible – easy to program with the Arduino IDE
- 4 servo motor outputs – control the arm, base, and gripper
- Integrated OLED screen (128×64) – displays mode, messages, and feedback in real time
- Wireless communication ports for:
  - nRF24L01 (radio control)
  - HC-05 (Bluetooth connection)
  - ESP8266-01 (WiFi / IoT mode)
- Micro USB port – for programming and USB Serial mode
- Built-in battery charger – for a 7.4V Li-ion or LiPo battery
- Serial RX/TX pins – for external module or debugging

1.2 STEM Insight

The Pedro Board introduces students to **embedded systems**, where hardware and software work together to make intelligent machines. It's a perfect platform to **learn electronics, communication protocols, and real-world engineering design**.

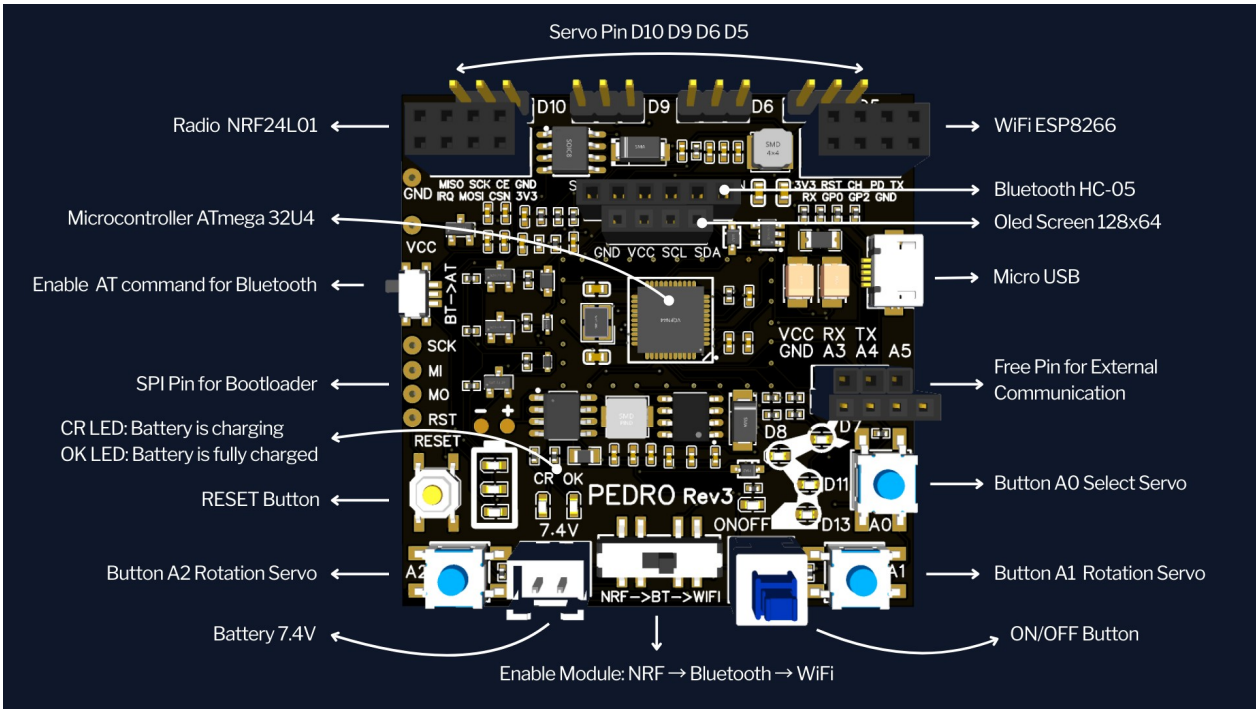

Examples of embedded systems: cars, washing machines, drones, robots, smart home devices.

The Pedro robot is a **perfect example of an embedded system** because its electronics and software work together to control mechanical parts.

The Pedro Board includes many useful features.

- Microcontroller (**ATmega32U4**): Acts as the brain of the robot
- Servo Motor Outputs : 4 outputs used to control (Base, Shoulder, Elbow, Gripper)
- OLED Display 128 × 64 screen used to display: robot mode, messages, feedback
- Wireless Communication, Pedro supports three communication technologies:
  - Radio Control – NRF24L01
  - Bluetooth – HC-05
  - WiFi / IoT – ESP8266-01
- USB Port Used for: programming the robot, charging the battery, serial communication with a computer

1.3 Identify Each Element of the Pedro Board:

Students work in small groups and try to identify the elements on the board.

Teacher can display the board on a projector or printed sheet.

Students must locate: microcontroller, LEDs, buttons, servo connectors, USB port, battery connector, communication modules

This activity develops **engineering observation skills**.

PART 1 : Identification of Non-Programmable Elements

1 Button ON/OFF	2 LED ON/OFF	3 LED CR[1]	4 LED OK[2]
5 3x LEDs Battery[3]	6 Reset Button	7 Switch radio → bluetooth → wifi	8 Switch Command AT Bluetooth

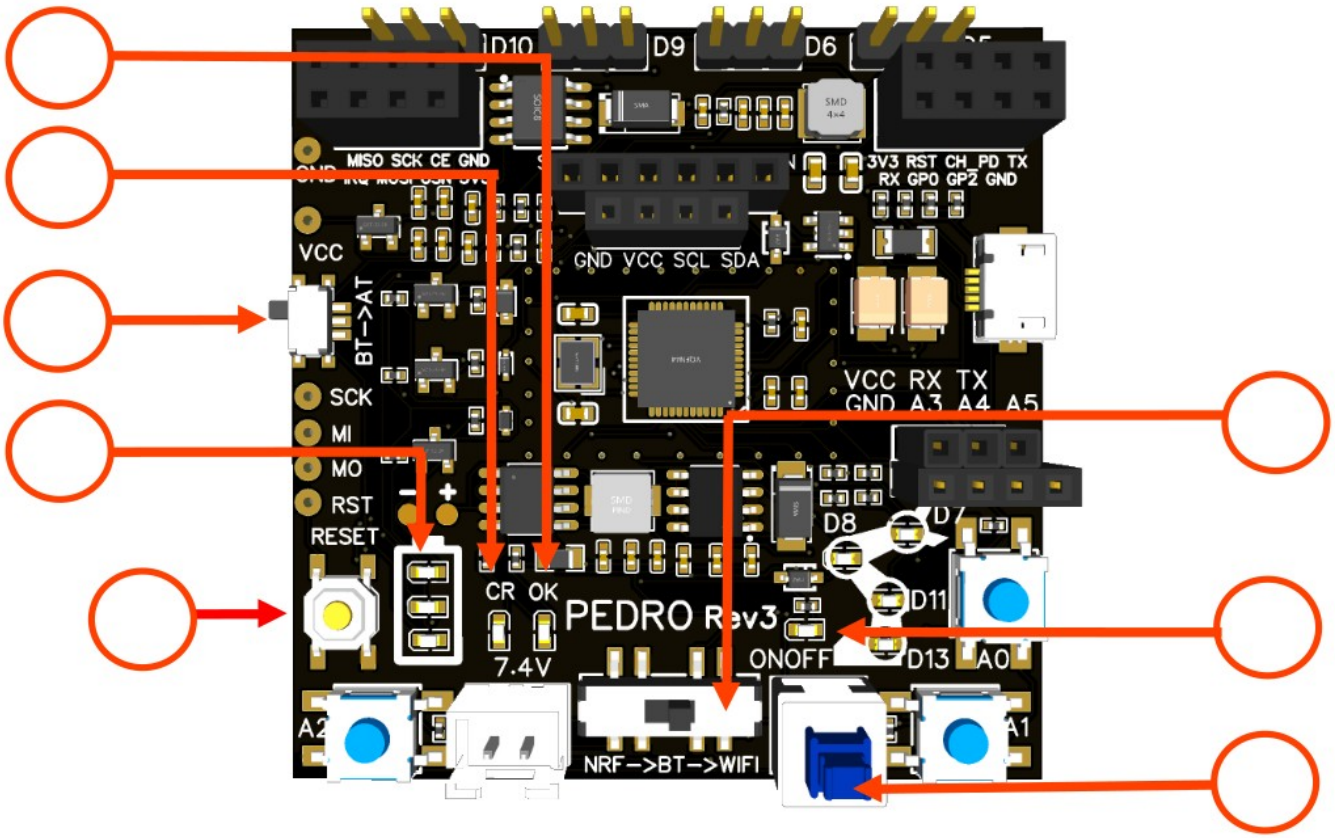

[1] **LED CR** : Indicates that the battery is currently **charging**.
[2] **LED OK** : Indicates that the battery is **fully charged**.
[3] **Battery Level LEDs:** Show the **battery charge level** from bottom to top (**25%, 50%, and 100%)**.

PART 2 : Identification of Programmable Elements

1 LED Base D13	2 LED Shoulder D11	3 LED Elbow D8	4 LED Gripper D7
5 Pin Servo Base D5	6 Pin Servo Shoulder D6	7 Pin Servo Elbow D9	8 Pin Servo Gripper D10
9 Button A0 Select Servo	10 Button A1 Rotation Servo	11 Button A2 Rotation Servo	12 Microcontroller (the brain)

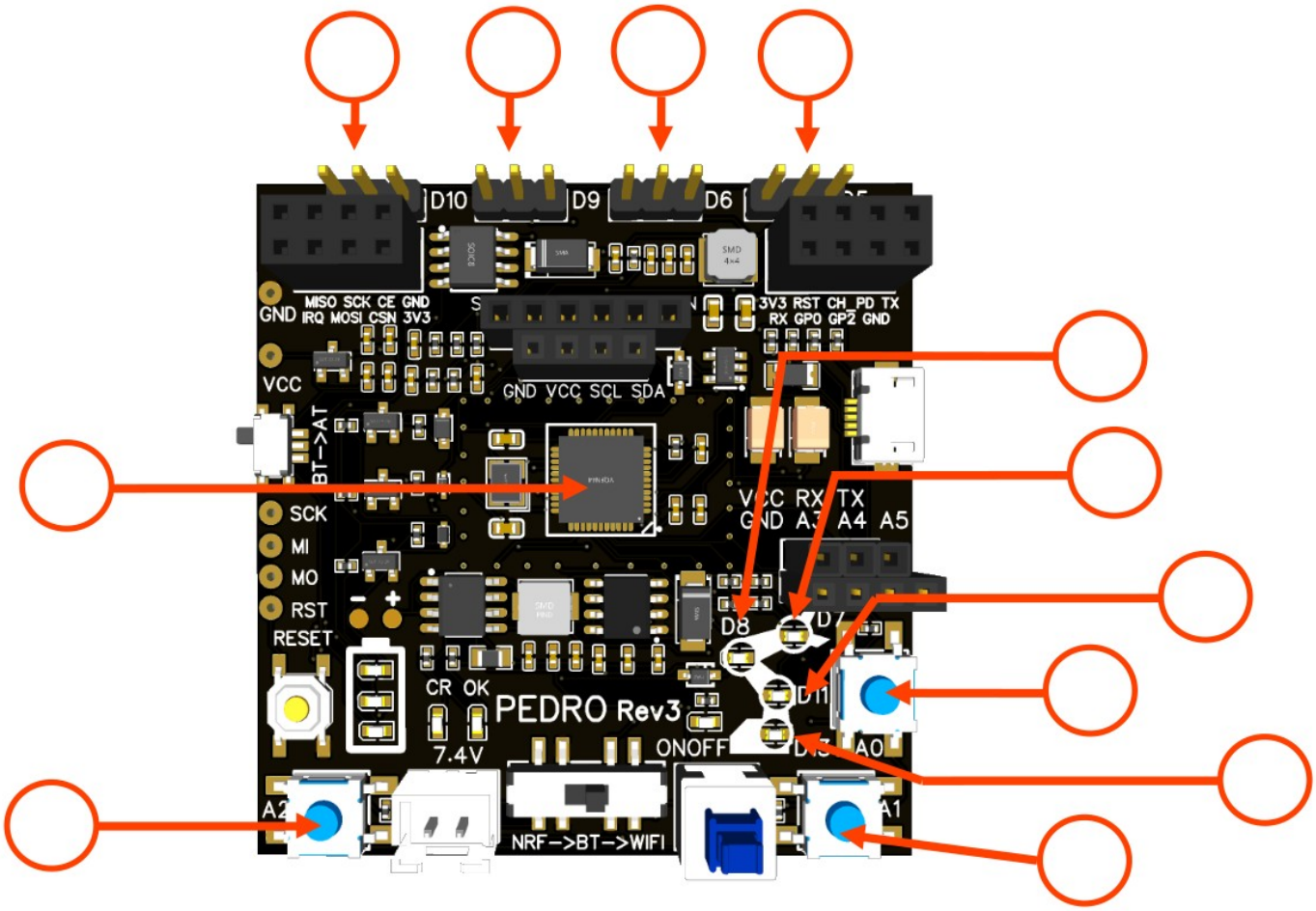

[1.] A **programmable element** is a component on the electronic board that can be **controlled by programming the microcontroller**. This can include **buttons**, **LEDs**, or **input/output pins**.

PART 3 : Identification of Connectors

1 Radio module NRF24L01	2 WiFi module ESP01	3 Bluetooth module HC-05	4 OLED Screen 128x64
5 7.4 V Battery Connector	6 Pin RX TX A4 A4 A5[1]	7 Port micro USB[2]	8 Pin Bootloader[3]

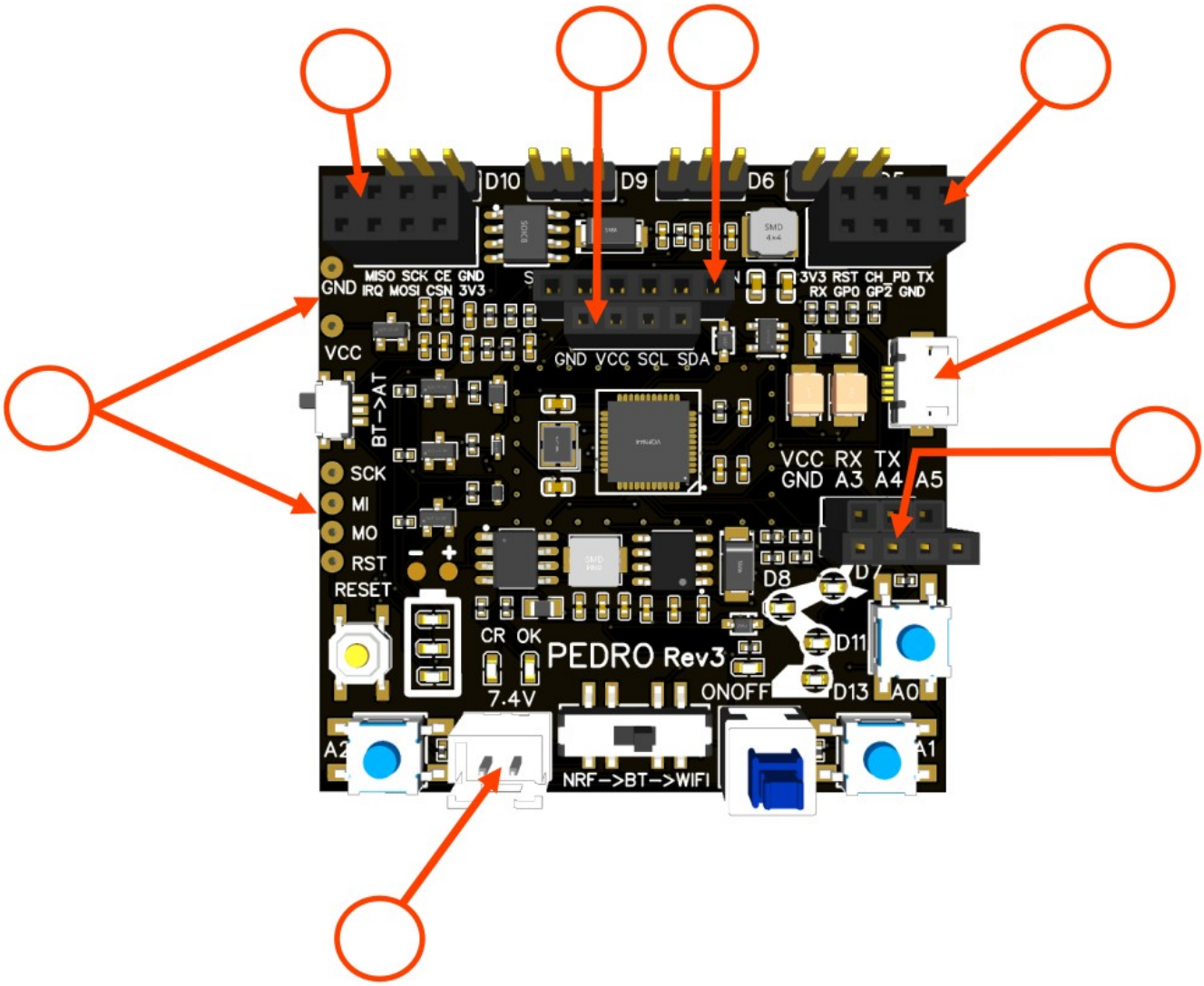

The pins **RX, TX, A3, A4, and A5** allow Pedro to **communicate with external devices**, such as an Arduino board, another Pedro robot, or components on a **breadboard** (e.g., a button or an LED).
The **USB port** has **three main functions**:

1. **Programming** the board
2. **Charging** the battery
3. **Controlling** the Pedro robot via a **graphical interface**

2. Programming Activities – Discover Embedded Systems

In this section, students will upload and test Arduino sketches using the Pedro Board.

They will interact with:

• LEDs (D13, D11, D8, D7)
• Buttons (A0, A1, A2)

These activities introduce the fundamentals of programming:

• digital outputs
• digital inputs
• conditions
• timing
• logic

2.1 Install the Pedro Library

- **Download and install** the latest version of the Arduino IDE.
- **Install the required libraries** from the Library Manager:
  - PedroRobot: Tools → Manage Libraries → search PedroRobot → Install
  - U8glib: Tools → Manage Libraries → search U8glib → Install
  - RF24: `Tools → Manage Libraries → search` **`RF24`** `→ Install`

2.2 Important Rule

After each modification, students must:

1. Click **Upload** in the Arduino IDE
2. Wait for the program to upload to the Pedro Board
3. Observe the result on the robot

This step is essential to understand how programming affects hardware behavior.

ACTIVITIES:

1. First LED (Hello Pedro)

- From Arduino IDE Open: `File → Examples → PedroRobot → STEM → Activitie_1`
- Upload Sketch

```
void setup() {
  pinMode(13, OUTPUT);
}
void loop() {
  digitalWrite(13, HIGH);
}
```

Mission

Turn ON your first LED.

Student Actions

• Upload the sketch to the Pedro Board
• Observe what happens

Observation

• Which LED turns ON?
• Does it stay ON or blink?

Experiment

• Change `HIGH` to `LOW`
• Upload again

👉 What happens now?

2. Blink LED

- From Arduino IDE Open: `File → Examples → PedroRobot → STEM → Activitie_2`
- Upload Sketch

```
void setup() {
  pinMode(13, OUTPUT);
}
void loop() {
  digitalWrite(13, HIGH);
  delay(500);
  digitalWrite(13, LOW);
  delay(500);
}
```

Mission

Make the LED blink.

Student Actions

• Upload the sketch
• Observe the blinking speed

Experiment

• Change `delay(500)` to `delay(1000)`
• Upload again

👉 What changed?

• Try `delay(100)`

👉 Is it faster or slower?

3. Moving LEDs

- From Arduino IDE Open: `File` → `Examples` → `PedroRobot` → `STEM` → `Activitie_3`
- Upload Sketch

```
int leds[] = {13, 11, 8, 7};
void setup() {
  for(int i=0; i<4; i++){
    pinMode(leds[i], OUTPUT);
  }
}
void loop() {
  for(int i=0; i<4; i++){
    digitalWrite(leds[i], HIGH);
    delay(200);
    digitalWrite(leds[i], LOW);
  }
}
```

Mission

Create a moving light effect.

Student Actions

• Upload the sketch
• Observe the LED sequence

Experiment

• Change `delay(200)` to `delay(50)`
• Upload again

👉 What happens?

• Change the order of LEDs

👉 What changes?

4. Button Controls LED

- From Arduino IDE Open: `File → Examples → PedroRobot → STEM → Activitie_4`
- Upload Sketch

```
void setup() {
  pinMode(A0, INPUT);
  pinMode(13, OUTPUT);
}
void loop() {
  if (digitalRead(A0) == HIGH) {
    digitalWrite(13, HIGH);
  } else {
    digitalWrite(13, LOW);
  }
}
```

Mission

Control the LED using a button.

Student Actions

• Upload the sketch
• Press button A0

Observation

• What happens when you press the button?
• What happens when you release it?

Experiment

• Change LED pin (13 → 11)
• Upload again

👉 Which LED is controlled now?

5. Multiple Buttons

- From Arduino IDE Open: `File → Examples → PedroRobot → STEM → Activitie_5`
- Upload Sketch

```
void setup() {
  pinMode(A0, INPUT);
  pinMode(A1, INPUT);
  pinMode(A2, INPUT);
  pinMode(13, OUTPUT);
  pinMode(11, OUTPUT);
  pinMode(8, OUTPUT);
}
void loop() {
  digitalWrite(13, digitalRead(A0));
  digitalWrite(11, digitalRead(A1));
  digitalWrite(8, digitalRead(A2));
}
```

Mission

Each button controls one LED.

Student Actions

• Upload the sketch
• Press each button

Observation

• Which LED corresponds to each button?

Experiment

• Swap LED pins in the code
• Upload again

👉 What changes?

6. Toggle LED

- From Arduino IDE Open: `File` → `Examples` → `PedroRobot` → `STEM` → `Activitie_6`
- Upload Sketch

```
bool state = false;
void setup() {
  pinMode(A0, INPUT);
  pinMode(13, OUTPUT);
}
void loop() {
  if (digitalRead(A0) == HIGH) {
    state = !state;
    digitalWrite(13, state);
    delay(300);
  }
}
```

Mission

Press once → LED ON
Press again → LED OFF

Student Actions

• Upload the sketch
• Press button multiple times

Observation

• Does the LED stay ON or OFF?

Experiment

• Change `delay(300)`

👉What happens if it's too small?

7. Reaction Game

- From Arduino IDE Open: `File` → `Examples` → `PedroRobot` → `STEM` → `Activitie_7`
- Upload Sketch

```
void setup() {
  pinMode(13, OUTPUT);
  pinMode(A0, INPUT);
}
void loop() {
  delay(random(1000,3000));
  digitalWrite(13, HIGH);
  while(digitalRead(A0) == LOW);
  digitalWrite(13, LOW);
}
```

Mission

Press the button as fast as possible when the LED turns ON.

Student Actions

• Upload the sketch
• Play the game

Observation

• Is the delay predictable?

Experiment

• Change `random(1000,3000)`
• Upload again

👉 Is it harder or easier?

8. Secret Code

- From Arduino IDE Open: `File` → `Examples` → `PedroRobot` → `STEM` → `Activitie_8`
- Upload Sketch

```
int step = 0;
void setup() {
  pinMode(A0, INPUT);
  pinMode(A1, INPUT);
  pinMode(A2, INPUT);
  pinMode(13, OUTPUT);
}
void loop() {
  if (digitalRead(A0) == HIGH && step == 0) {
    step = 1; delay(300);
  }
  if (digitalRead(A1) == HIGH && step == 1) {
    step = 2; delay(300);
  }
  if (digitalRead(A2) == HIGH && step == 2) {
    digitalWrite(13, HIGH);
  }
}
```

Mission

Unlock the robot using the correct sequence.

Student Actions

• Upload the sketch
• Try different button sequences

Observation

• Which sequence works?

Experiment

• Change the order in the code
• Upload again

👉 Can you create your own code?

📝 Quiz — Check Your Understanding

1. What type of microcontroller powers Pedro?
A) ATmega32U4
B) ESP32
C) Raspberry Pi
D) STM32
✅ **Answer:**

2. What software is required to program Pedro?
A) Visual Studio
B) Arduino IDE
C) Python
D) MATLAB
✅ **Answer:**

3. What component allows Pedro to communicate wirelessly over long distances?
A) NRF24L01 module
B) Wi-Fi router
C) GPS module
D) Ultrasonic sensor
✅ **Answer:**

4. Which module enables Pedro to connect to Wi-Fi ?
A) HC-05 Bluetooth module
B) ESP8266-01 module
C) NRF24L01 module
D) GPS module
✅ **Answer:** B

5. What is the screen resolution of Pedro's OLED display?
A) 64x64
B) 128x32
C) 128x64
D) 256x128
✅ **Answer:**

6. Which component represents the "brain" of the Pedro board?
A) The OLED Display
B) The ATmega32u4 Microcontroller
C) The Battery Charger
D) The NRF24L01 Radio Module
✅ **Answer:**

7. What type of display is integrated into the Pedro Board?
A) LCD 16x2
B) OLED 128x64
C) TFT 2.4"
D) LED matrix
✅ **Answer:**

8. What function does the Micro USB port serve?
A) Power only
B) Programming, charging, and serial control
C) Bluetooth pairing
D) WiFi connection
✅ **Answer:**

9. Which module provides WiFi capability?
A) NRF24L01
B) HC-05
C) ESP8266-01
D) GPS module
✅ **Answer:**

19. What does the ATmega32u4 allow students to do?
A) Design 3D parts
B) Program the robot using Arduino IDE
C) Print STL files
D) Connect motors directly
✅ **Answer:**

11. Which component shows the battery charge level?
A) LED CR
B) LED OK
C) Battery Level LEDs
D) OLED screen
✅ **Answer:**

12. What does the LED “CR” indicate?
A) Bluetooth connected
B) Battery charging
C) Low voltage
D) Power OFF
✅ **Answer:**

13. What switch is used to select between NRF, BT, and WiFi?
A) Power switch
B) Communication switch
C) Mode button
D) Servo selector
✅ **Answer:**

14. What is the purpose of the RX/TX pins?
A) Power the LEDs
B) Enable serial communication
C) Control servos
D) Connect battery
✅ **Answer:**

15. What kind of system is the Pedro Board a good example of?
A) Mechanical system
B) Embedded system
C) Hydraulic system
D) Optical system
✅ **Answer:**

END
Pedro STEM Lesson n°2