STEM Lesson n°3

Build Your Robot

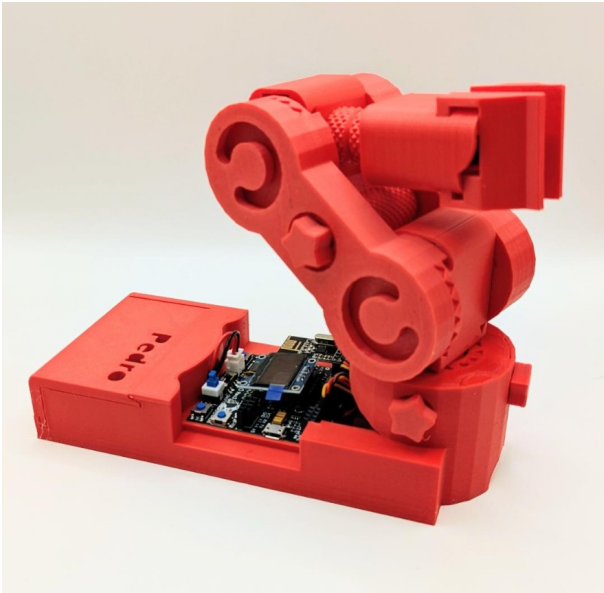

v1.0.0

PDF Tricks
*(To make sure the PDF file that opens in your browser shows the most up-to-date version, add a version query to the URL, like this: https://almtzr.github.io/PedroSTEM/stem_lessons/Pedro_Lesson_3.pdf?**v=2**)*

🎯 Learning Objective

In this lesson, students will assemble the Pedro robot while discovering how robotic arms are designed.

They will explore the mechanical structure of a robot, learn about servo motors, and understand how planetary gear systems improve motion and precision.

Students will also discover how 3D printing enables rapid robotic prototyping.

This lesson combines engineering, mechanics, and fabrication in a hands-on experience.

By the end of this lesson, students will be able to:

- Understand the mechanical structure of a robotic arm
- Identify the four servomotors used in Pedro
- Explain the purpose of a planetary gear system
- Understand how 3D printing is used in robotics design
- Assemble the Pedro robot step-by-step
- Test the robot's mechanical movements

👨‍🏫 Instructor Notes

- Recommended age: 12+
- Difficulty Level : Beginner → Intermediate
- Teaching Approach
  - Project-based learning
  - Collaborative teamwork
  - Engineering exploration
- Duration: 90 – 120 minutes

🧰 Required Materials

Each student or team needs a Pedro Robot Full Kit:

- All 3D printed parts
- Pedro Rev3 Electronic Board
- 4x Continuous rotation servomotors
- 2x Ball bearings (8×22×7 mm)
- 7.4V Li-ion battery
- Computer with Arduino IDE

Table of Contents

🎯 Learning Objective.....2
👩‍🏫 Instructor Notes.....2
🧰 Required Materials.....2
1. What Makes Pedro Unique?.....4
2. Materials Check.....4
3. Pedro Anatomy.....5
3.1 Understanding the Robot Structure.....5
3.2 What Is a Planetary Gear System?.....6
3.3 Why use a planetary system on Pedro?.....6
4. Install the Pedro Program.....7
5. Assembly Instructions.....8
Step 1: Building the Base.....8
Step 3: Building the Gripper.....9
Step 4: Assembling the Arm.....10
6. Reflection Discussion.....11
📝 Quiz — Check Your Understanding.....12

1. What Makes Pedro Unique?

Pedro is a 100% 3D-printed robotic arm. Unlike many robots, Pedro is designed to be simple to assemble and fully open source. A unique feature of Pedro is that no screws or glue are required. All parts snap together using precision 3D-printed joints. This makes Pedro perfect for STEM classrooms and robotics workshops.

2. Materials Check

Before starting the assembly, students must verify that **all parts are present**.
Students work in teams and check each component by putting an ✅ next to each part of Pedro robot.

✅ All Pedro 3D printed parts
✅ Pedro Rev3 Electronic Board
✅ 2 ball bearings 8x22x7 mm
✅ 4 continuous rotation (360°) servomotors
✅ 7.4V DC battery

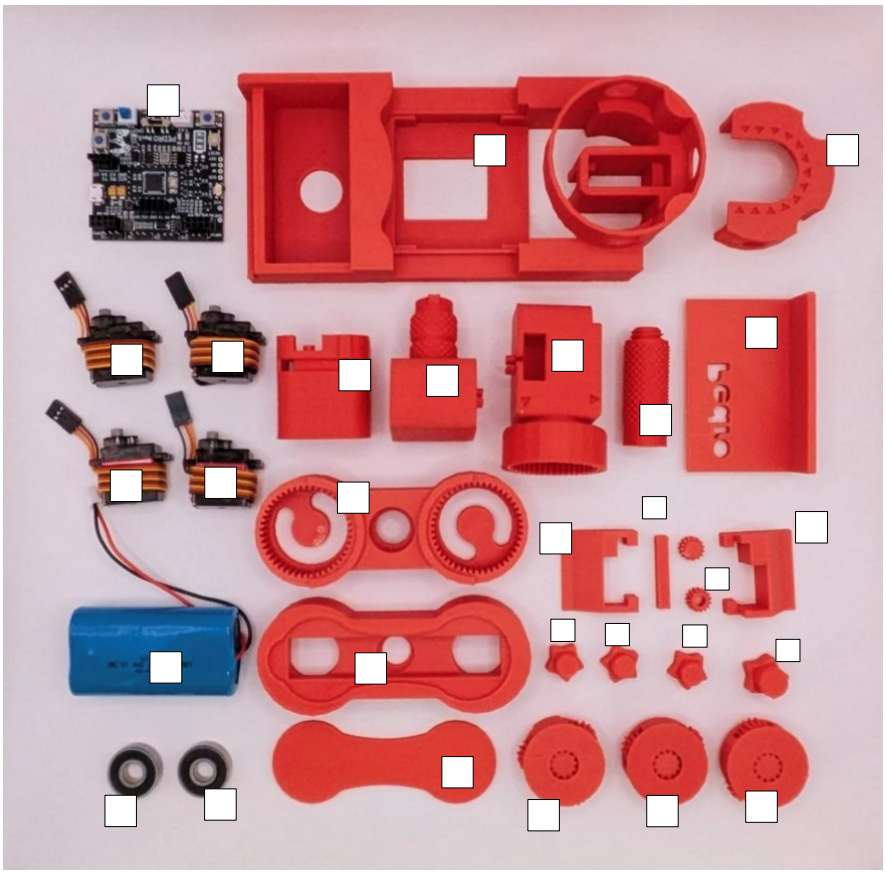

☐*Figure 1*

💡 **What You Should Know About Pedro**

All the parts of Pedro are 3D printed. As you can see, there are no screws in the pieces that make up Pedro. Which makes Pedro a 100% 3D-printed robot.

3. Pedro Anatomy

Pedro is a **robotic arm with four degrees of motion**. It uses **four servomotors**, each responsible for a specific function.

3.1 Understanding the Robot Structure

Servo	Function
Base Servo	Horizontal rotation
Shoulder Servo	Vertical lifting
Elbow Servo	Arm extension
Gripper Servo	Object grasping

Together these motors allow Pedro to perform **precise robotic movements**.

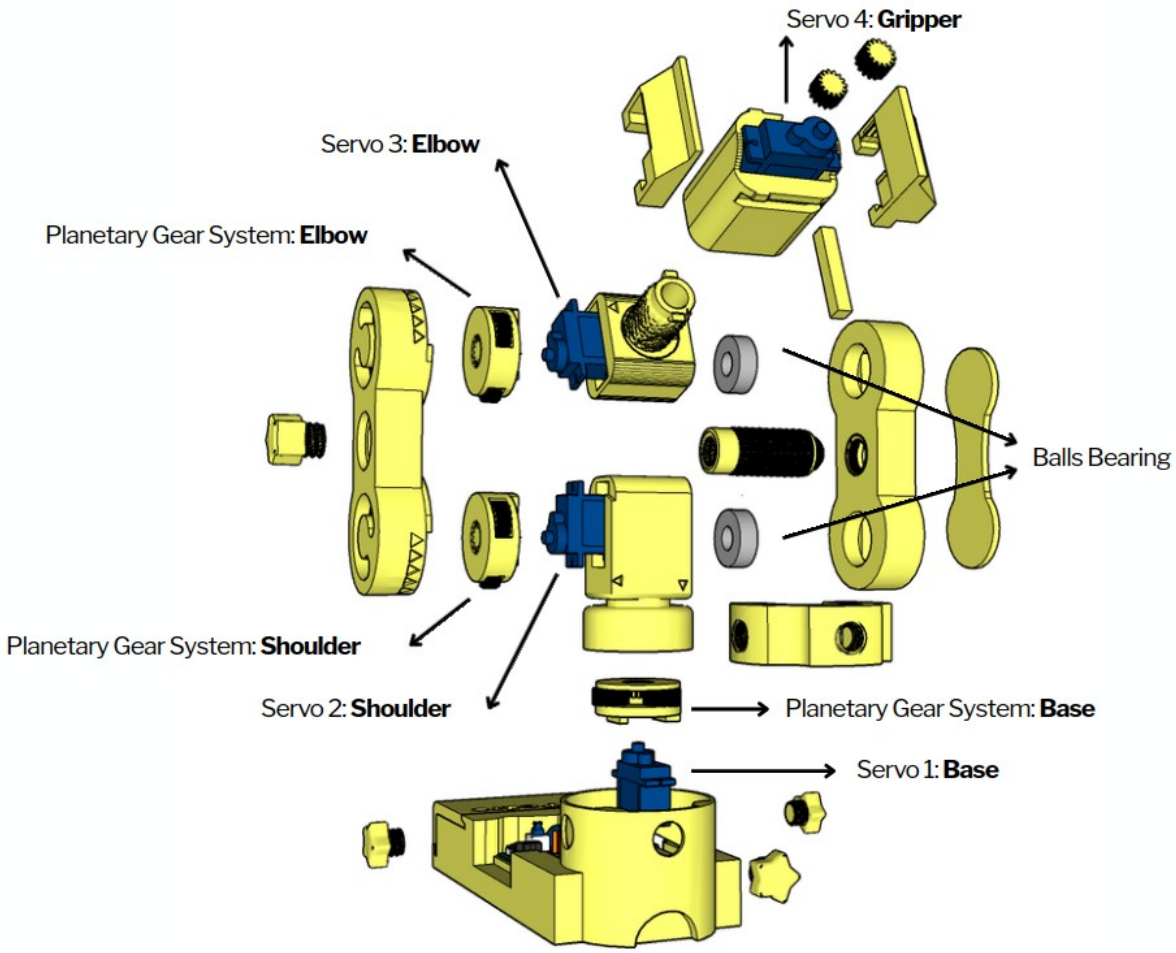

3.2 What Is a Planetary Gear System?

Pedro features three planetary motion modules, fully 3D-printed. These modules enable smooth and precise movements, powered by a continuous servomotor motor placed at the center of each joint.

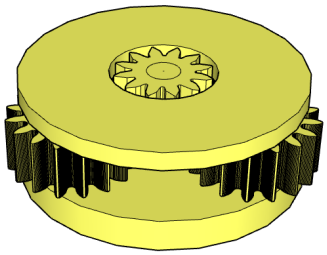

Figure 2: Planetary gear system

A planetary gearbox is a gear mechanism that optimizes motion transmission by reducing speed and increasing torque. It consists of:

⚙️ The sun gear: the central gear (driven by the motor)
⚙️ The planet gears: three gears rotating around the sun
⚙️ The ring gear (here replaced by Pedro's structure), holding everything together

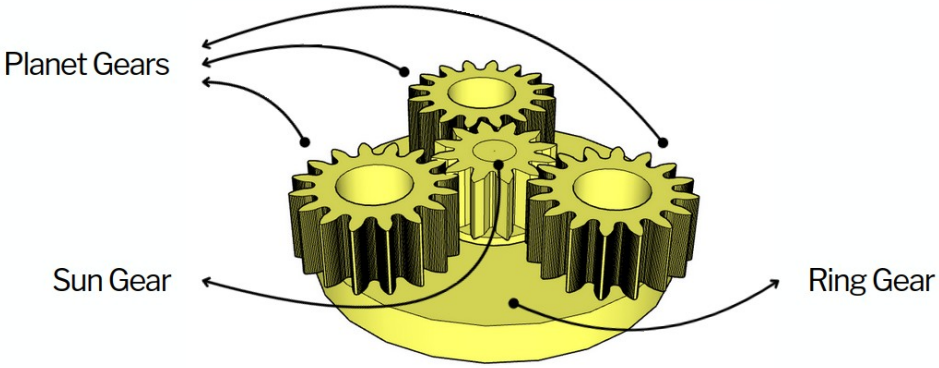

Figure 3: Planetary gear system

3.3 Why use a planetary system on Pedro?

✅ Increased power and precision
✅ Compact and robust design
✅ Fully 3D-printable with no complex parts

This system allows Pedro to execute smooth and precise movements in its three main joints: the base, shoulder, and elbow. No screws, no glue just 100% 3D printed.

4. Install the Pedro Program

The **Pedro Program** is the core software that powers and controls the robot. It acts as the robot's "brain," managing all behaviors and interactions.
Through this single program, students can access and explore multiple control modes, allowing them to understand how a robot receives instructions, processes them, and translates them into physical actions.

- **Download and install** the latest version of the Arduino IDE.
- **Install the required libraries** from the Library Manager:
  - PedroRobot: Tools → Manage Libraries → search PedroRobot → Install
  - U8glib: Tools → Manage Libraries → search U8glib → Install
  - RF24: `Tools → Manage Libraries → search` **`RF24`** `→ Install`
- **Insert** the Oled Screen into the Pedro board and **Connect** the board to your computer via USB.
- **Select the correct port**:
  - Tools → Select the port that appear when you connect Pedro robot
- **Select the board type**:
  - Tools → Board → Arduino Micro
- **Open the example sketch**:
  - File → Examples → PedroRobot → Pedro
- **Compile and upload** the sketch to your Pedro board.

✅ *If everything is correct, Pedro's OLED screen will display "MANUAL MODE".*

- Press the button **A0** and observe what happen.
  The LED corresponding to the selected servo light on. That button allows you to control each part of the robot. Here is the mapping between the LED ID and the servo ID
  - `LED D13 → servo D5 (Base)`
  - `LED D11 → servo D6 (Shoulder)`
  - `LED D8  → servo D9 (Elbow)`
  - `LED D7  → servo D10 (Gripper)`

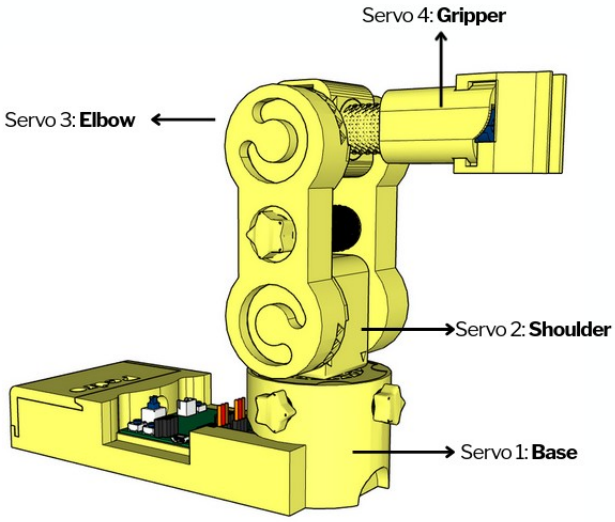

5. Assembly Instructions

💡 *Pedro is entirely screw-free — all parts snap together easily!*

Now students will assemble Pedro step by step. Teacher may demonstrate the first step. Students then complete the build in teams.

Step 1: Building the Base

Insert the first servomotor into the base structure and connect it to the Board pin D5. This motor controls horizontal rotation. Attach the planetary gear module to the servo shaft. Check that the base rotates smoothly.

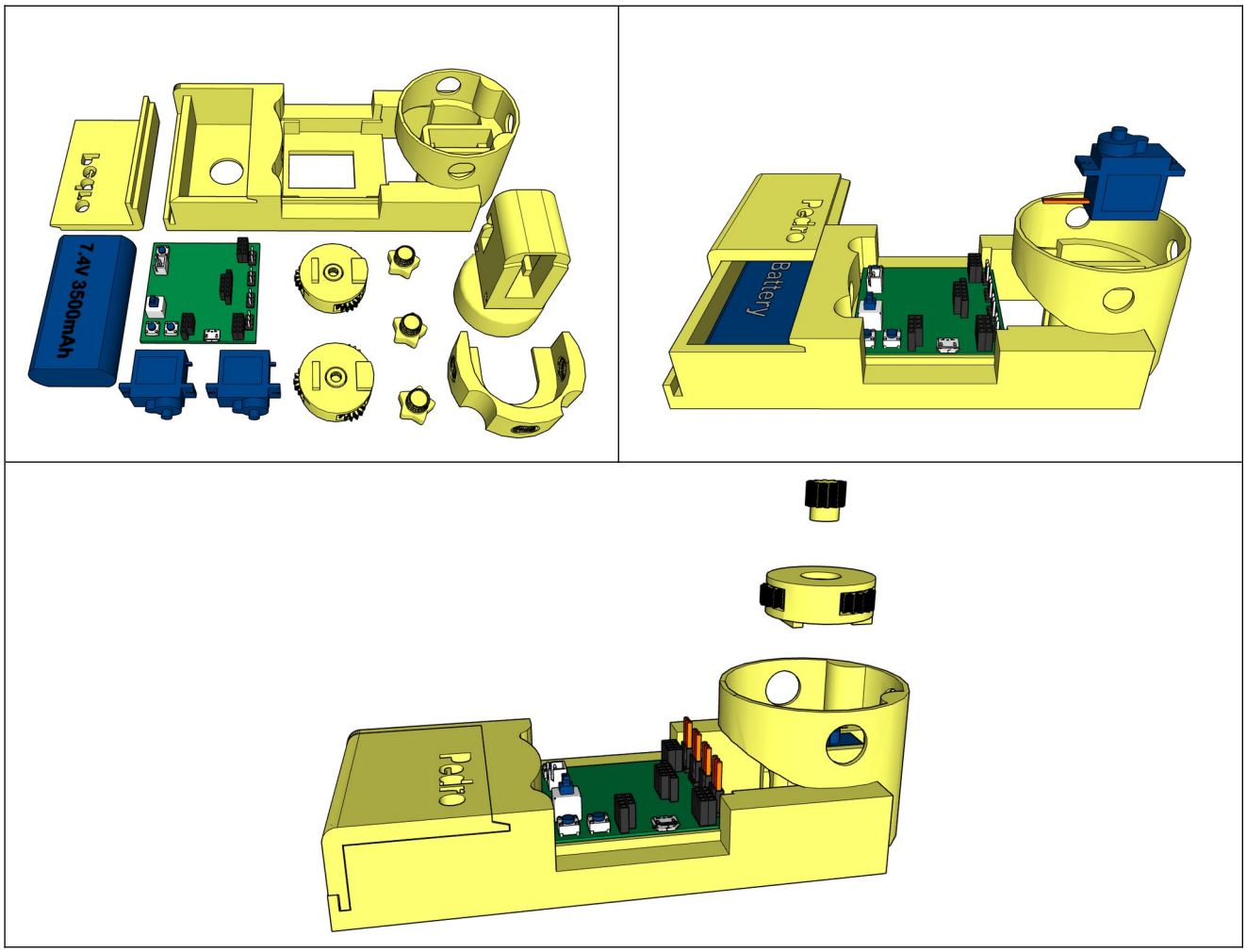

Step 2: The shoulder

Insert the second servomotor into the Shoulder part and connect it to the Board pin D6.
Attach the planetary gear module to the servo shaft like described.

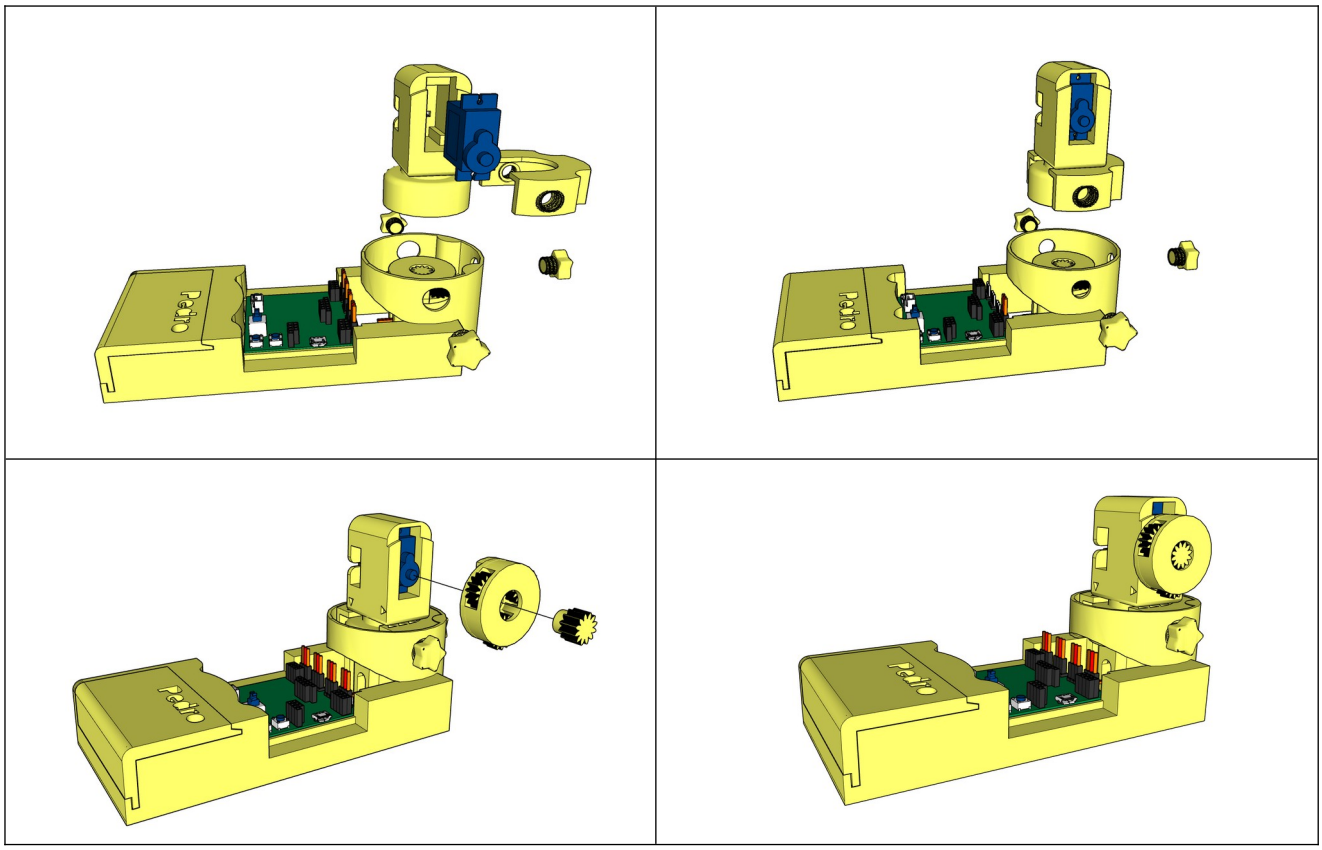

Step 3: Building the Gripper

Assemble the gripper with the fourth servo. Ensure it opens and closes smoothly.

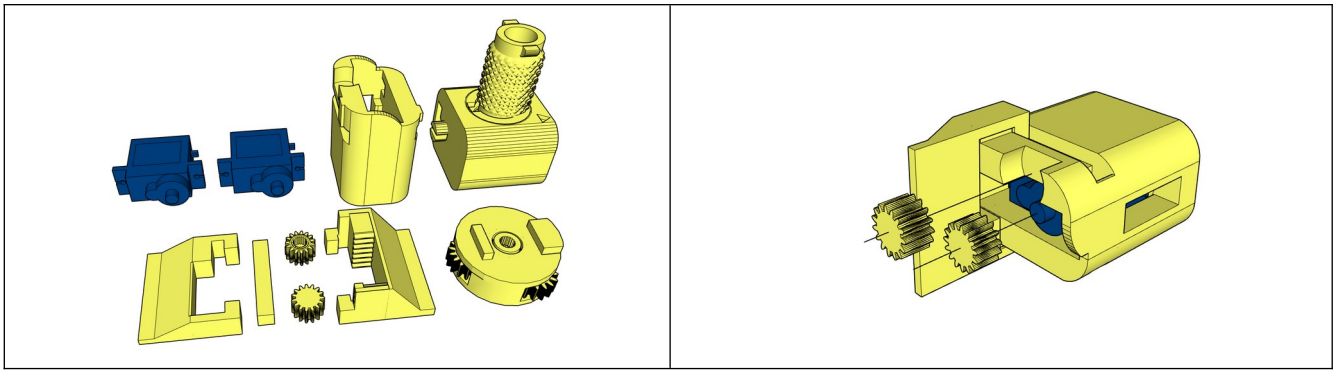

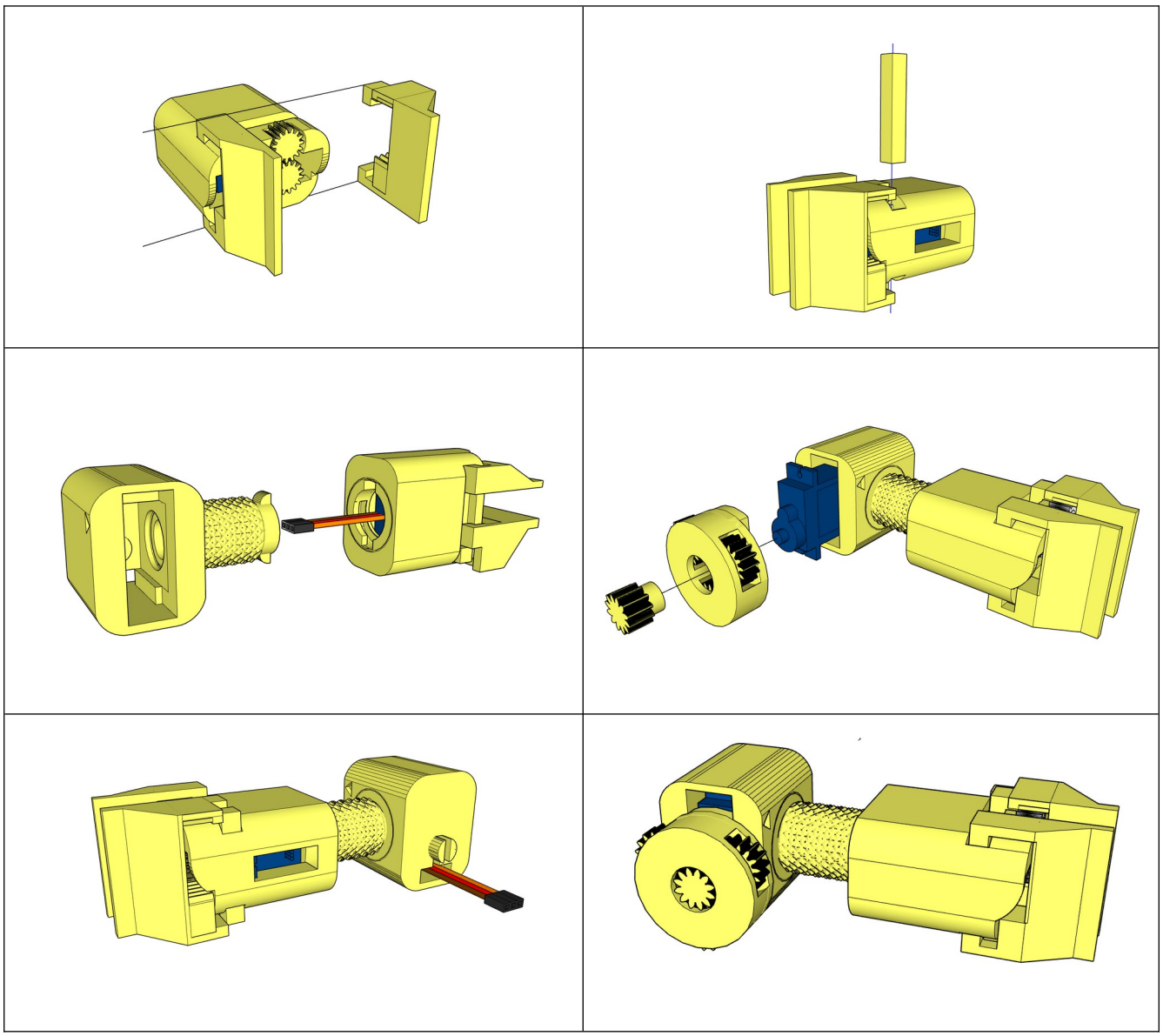

Step 4: Assembling the Arm

Connect the shoulder and elbow servos. Check each movement before final assembly.

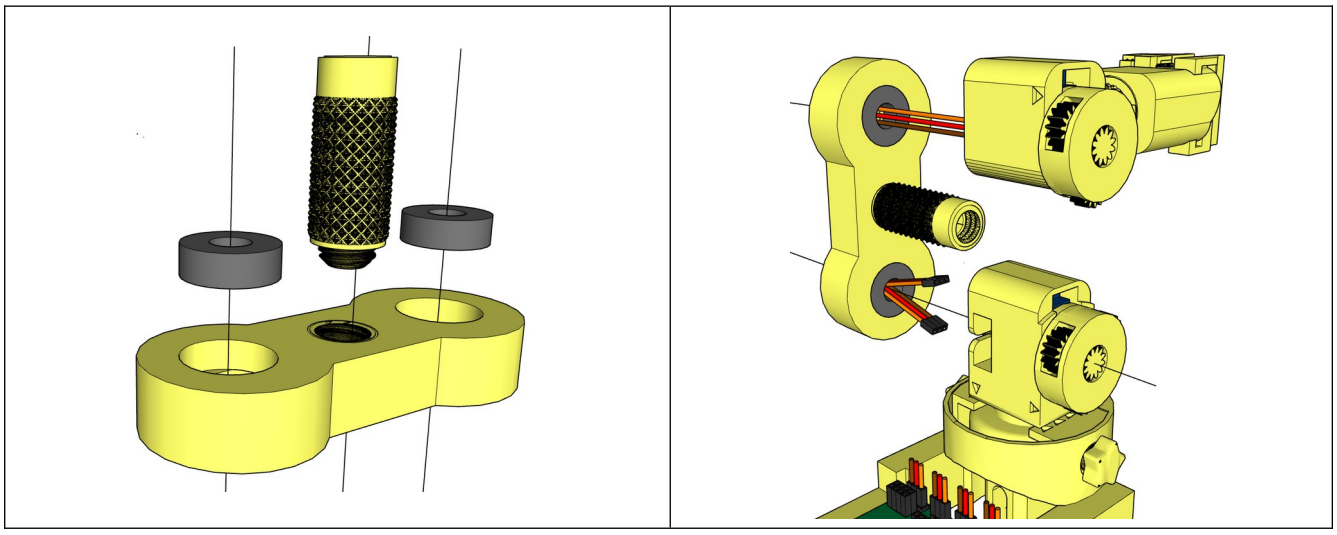

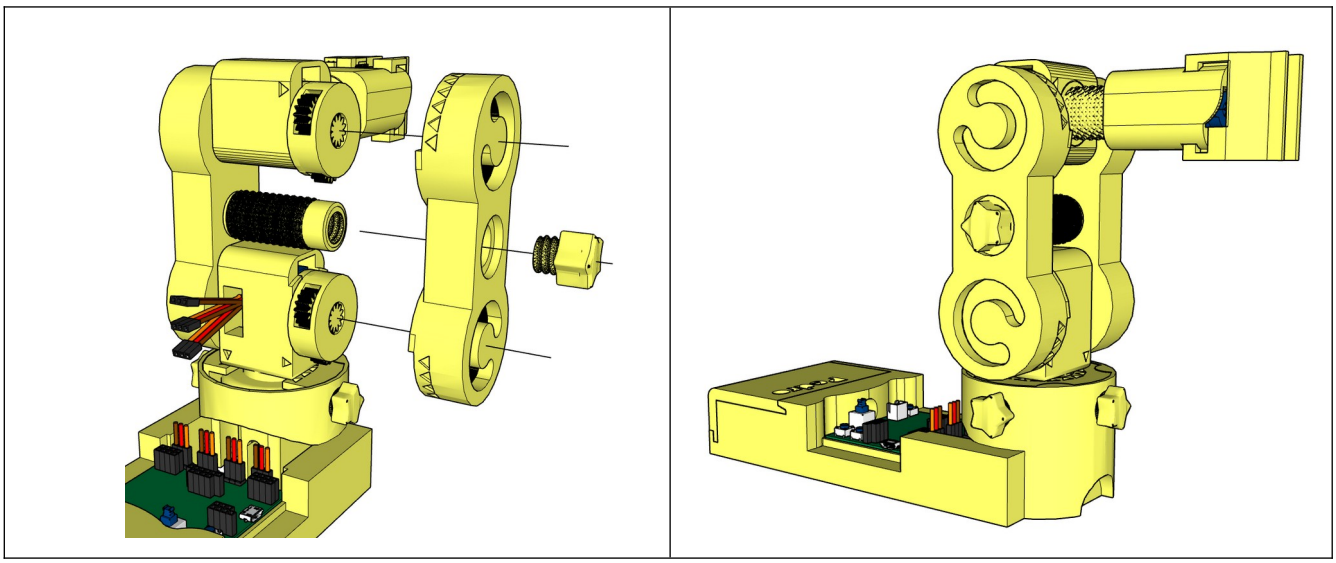

6. Reflection Discussion

Teacher asks students:

- Why do robots use gears?
- What advantages does 3D printing provide?
- Why are servomotors useful for robotics?
- Where are robotic arms used in real life?

Students connect classroom learning with **real engineering applications**.

📝 Quiz — Check Your Understanding

1. What is the main goal of the Pedro Lesson 1?

A) Build a drone
B) Discover the Pedro robot
C) Learn 3D modeling only
D) Program a mobile app
✅ **Answer:**

2. What kind of motor does Pedro use?

A) Stepper motors
B) Brushed DC motors
C) Continuous rotation servomotors (360°)
D) Hydraulic actuators
✅ **Answer:**

3. How many servomotors are used in Pedro?

A) 2
B) 3
C) 4
D) 5
✅ **Answer:**

4. What is the purpose of the first servomotor?

A) Controls the gripper
B) Controls the base rotation for horizontal movement
C) Controls the shoulder
D) Controls the elbow
✅ **Answer:**

5. What does the fourth servomotor control?

A) The base
B) The shoulder
C) The elbow
D) The gripper
✅ **Answer:**

6. What type of bearing system does Pedro use?

A) Magnetic bearings
B) Ball bearings
C) Roller bearings
D) Gear bearings
✅ **Answer:**

7. What is the purpose of the planetary gear system in Pedro?

A) To reduce torque and increase speed
B) To increase torque and improve precision
C) To provide electrical power
D) To connect sensors
✅ **Answer:**

8. How many planetary motion modules does Pedro have?

A) 1
B) 2
C) 3
D) 4
✅ **Answer:**

9. Which gear in the planetary system is driven by the motor?

A) The planet gear
B) The sun gear
C) The ring gear
D) The outer shell
✅ **Answer:**

END
Pedro STEM Lesson n°3