STEM Lesson n°1

« Pedro Discover »

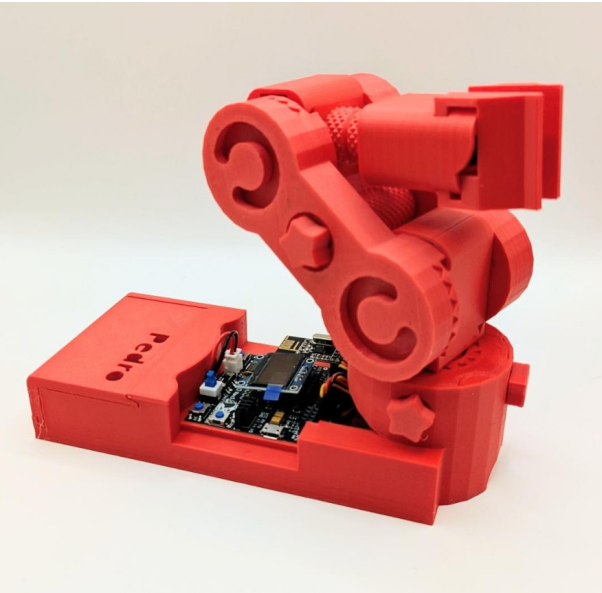

v1.0.2

PDF Tricks
(*To make sure the PDF file that opens in your browser shows the most up-to-date version, add a version query to the URL, like this:*
*https://almtzr.github.io/PedroSTEM/stem_lessons//Pedro_Lesson_1.pdf?****v=2****)*

🎯 Learning Objective

This lesson introduces students to **P.E.D.R.O the Programmable Educational Robot**, the fully 3D-printed, open-source robot designed to make robotics learning fun and hands-on. By the end of this session, students will be able to:

- Understand what a robot is
- Identify the main parts of a robot
- Discover how robots interact with the physical world
- Understand the mission of the Pedro robot
- Work collaboratively in a robotics team
- Learn how 3D printing works and how robots are designed

👨‍🏫 Teacher Notes

Duration: **60-90 minutes**

Materials:

- 1 Pedro robot (assembled and introduce by the teacher)

Teaching approach:

- inquiry-based learning
- hands-on discovery
- teamwork
- problem solving

Table of Contents

🎯 Learning Objective....2
👩‍🏫 Teacher Notes....2
1. Introduction to the Pedro Robot....4
2. What Is a Robot?....4
3. Observe Pedro....4
4. Understanding 3D Printing....5
5. Discover Robot Movement....6
6. Pedro's First Task....7
7. Pedro STEM Program Roadmap....7
📝 Quiz - Check Your Understanding....8

1. Introduction to the Pedro Robot

Pedro is a programmable educational robot designed to help students learn robotics in a fun and hands-on way. It is a **robotic arm** made of 3D-printed parts, controlled by a microcontroller, and powered by motors that allow it to move and interact with its environment. Through Pedro, students can explore how robots **think (programming), move (mechanics), and communicate (electronics)**.
But before building and programming Pedro in future lessons, you must first understand how robots work.

2. What Is a Robot?

Ask students: What do you think a robot is? Let students discuss in small groups. Then explain:
A robot is a machine that can:

1. **Sense** the environment
2. **Process** information
3. **Act** by moving or performing tasks

Example robots:

- factory robotic arms
- Mars rovers
- medical robots
- warehouse robots

Pedro is a **robotic arm**, similar to those used in industry.

3. Observe Pedro

Place the Pedro robot in front of the class. Ask students to observe it carefully.

Discussion questions:

- What parts can you see?
- How many motors do you think it has?
- How do you think it moves?

Students write their ideas. Explain the main components of Pedro.

Component	Function
Controller Board	The brain of the robot
Servo Motors	Create movement
Robot Structure	Holds the robot together
Gripper	Allows the robot to grab objects
Power Supply	Provides energy

Teacher tip: Let students **touch and inspect the robot.**

4. Understanding 3D Printing

Pedro is designed to be **fully manufacturable with a 3D printer**. 3D printing creates objects by depositing material **layer by layer**.

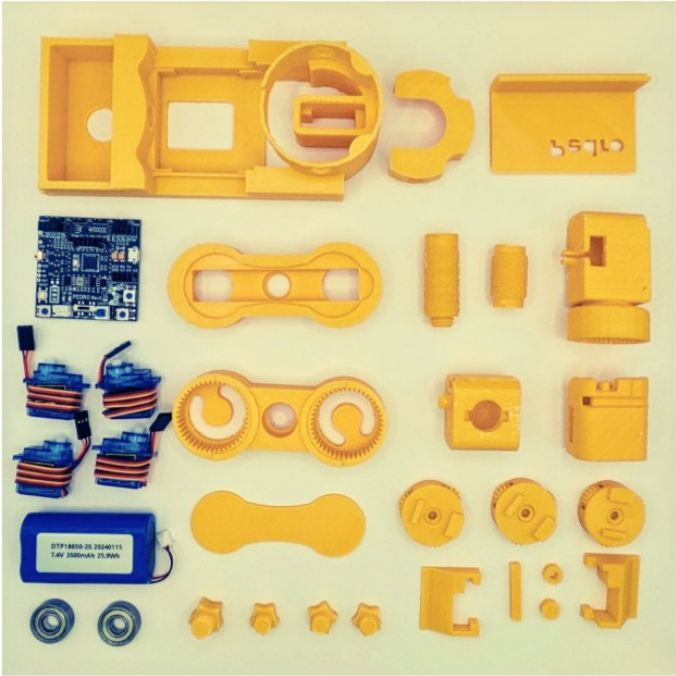

Common materials used:

1. PLA plastic
2. ABS plastic

Before printing a part, several important steps are needed:

The 3D Printing Workflow

- Design the part in CAD software
- Export the design as an STL file
- Convert the STL file to G-code
- Send the G-code to the 3D printer

Pedro requires only **four main printable models**: BASE.stl, SERVO.stl, ARM.stl, GEAR.stl

These files are available in the Pedro open-source repository (https://github.com/almtzr/Pedro). Students can download them and **print their own robot parts** if needed.

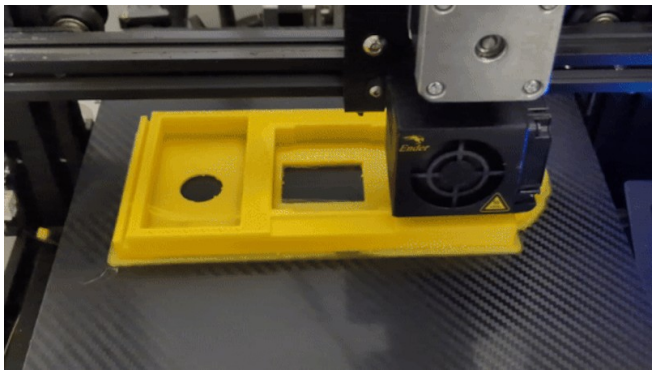 BASE.stl	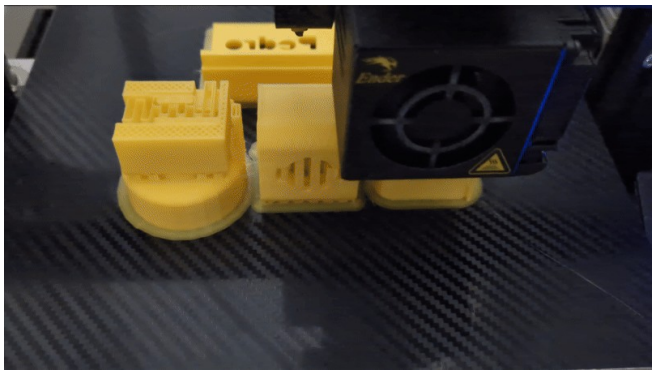 SERVO.stl
ARM.stl	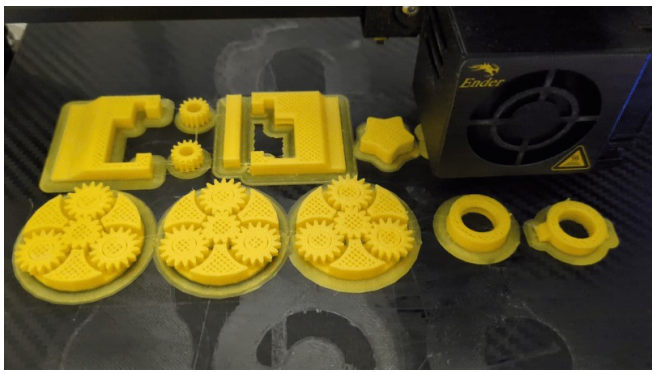 GEAR.stl

5. Discover Robot Movement

The Pedro Anatomy : As robotic arm Pedro is equipped with **four servomotors**, each serving a distinct purpose in its movement. Three servomotors control the movement axes, while the fourth servomotor is dedicated to the gripper.

- The **first servomotor** controls the base rotation, facilitating horizontal movement translation.
- The **second servomotor** manages the shoulder, enabling vertical rotation.
- The **third servomotor** operates the elbow, facilitating pick-up movements.
- Finally, **the fourth servomotor** controls the gripper, enabling Pedro to grasp objects securely.

Demonstrate the robot.
Move the different joints.
Explain that Pedro moves like a **human arm**.

Robot Joint	**Similar to Human Body**
Base	Shoulder rotation
Arm	Upper arm
Forearm	Lower arm
Gripper	Hand

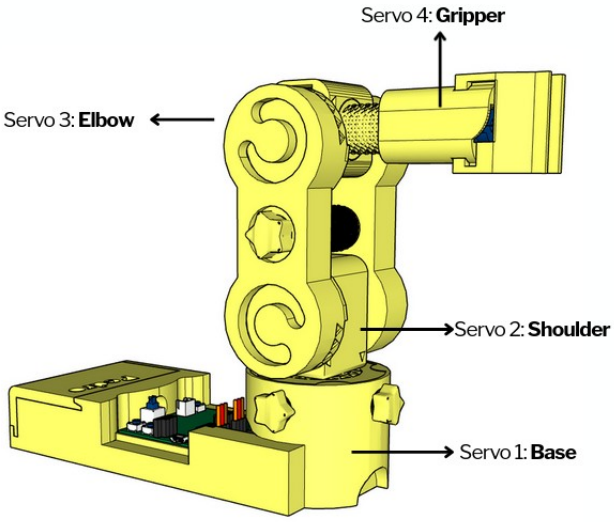

Ask students:

How many directions can the robot move?

6. Pedro’s First Task

Setup:
Place an object on the table.

Mission:
Pedro must pick up the object and move it to another location, or simply move some of his axes (base, elbow, gripper, etc.).

Ask the students:

- How does Pedro move? → Introduce the concept of **servos**.
- How does Pedro know which axis should move? → Introduce the concept of an **embedded system** and **coding**.

This activity introduces the concept of **robot task planning**.

Robots use **actuators** to move. An actuator converts **energy into motion**. In Pedro, the actuators are **servo motors**. These motors allow the robot to move **with precision**.

Ask students:

- Where are robots used in real life?
- How could robots help people?
- What tasks could Pedro perform?

7. Pedro STEM Program Roadmap

Explain the future lessons.

Students will learn how to:

- build Pedro
- understand the Pedro board
- control robot movements
- use Bluetooth and radio communication
- program the robot

📝 Quiz - Check Your Understanding

1. What does the acronym P.E.D.R.O. stand for?

A) Programmable Electric Device for Robotic Operation
B) Programmable Educational Robot
C) Printed Electronic Design Robotic Object
D) Personal Educational Digital Robot
✅ **Answer:**

2. What is a robot?

A) A machine that can perform tasks automatically
B) A type of computer game
C) A human assistant
D) A mobile phone
✅ **Answer:**

3. What component is the brain of the robot?

A) Battery
B) Motor
C) Microcontroller
D) Gripper
✅ **Answer:**

4. What component allows the robot to move?

A) Sensors
B) Actuators / Motors
C) Battery
D) Frame
✅ **Answer:**

5. What does the gripper do?

A) Stores energy
B) Controls the robot
C) Grabs and holds objects
D) Powers the robot
✅ **Answer:**

6. Why do robots need energy?

A) To look better
B) To move and operate their components
C) To communicate with humans
D) To change color
✅ **Answer:**

7. What material is used to print Pedro's parts?

A) Aluminum
B) PLA or ABS plastic
C) Steel
D) Nylon
✅ **Answer:**

8. What tool is used to generate 3D printer instructions from a design file?

A) STL file
B) G-code
C) CAD model
D) Firmware
✅ **Answer:**

9. What is the first step in 3D printing a part?

A) Generate G-code
B) Export to STL
C) Design in CAD
D) Print immediately
✅ **Answer:**

10. What makes Pedro unique in its construction?

A) It is 100% 3D printed with no screws
B) It uses wooden parts
C) It is laser-cut
D) It is glued together
✅ **Answer:**

11. What is an actuator?

A) A device that converts energy into movement
B) A type of sensor
C) A computer screen
D) A robot arm
✅ **Answer:**

12. What type of robot is Pedro?

A) Industrial welding robot
B) Educational robotic arm
C) Medical robot
D) Cleaning robot
✅ **Answer:**

13. Name one real-world use of robotic arms.

A) Playing video games
B) Assembling cars in factories
C) Charging phones
D) Watching movies
✅ **Answer:**

14. Why are robots useful?

A) They can do dangerous or repetitive tasks
B) They replace all humans
C) They only entertain people
D) They only work at night
✅ **Answer:**

15. What will you learn in the next lessons?

A) How to program and control the robot
B) How to build a car
C) How to cook
D) How to play music
✅ **Answer:**

END
Pedro STEM Lesson n°1