STEM Lesson n°1

« Pedro Discover »

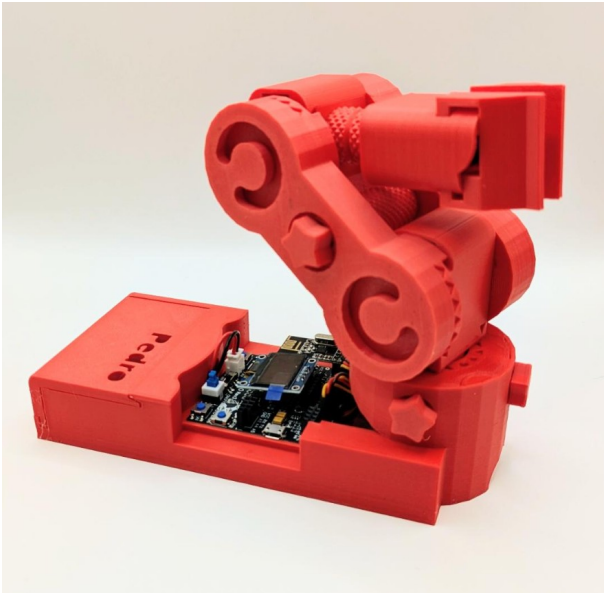

v1.0.2

PDF Tricks
(*To make sure the PDF file that opens in your browser shows the most up-to-date version, add a version query to the URL, like this: https://almtzr.github.io/PedroSTEM/stem_lessons//myfile.pdf?**v=2**)*

🎯 Learning Objectives

This lesson introduces students to **P.E.D.R.O the Programmable Educational Robot**, fully 3D-printed, open-source robot designed to make robotics learning fun and hands-on. By the end of this session, students will be able to:

- Understand what a robot is
- Identify the main parts of a robot
- Discover how robots interact with the physical world
- Understand the mission of the Pedro robot
- Work collaboratively in a robotics team
- Learn how 3D printing works and how robots are designed

👨‍🏫 Teacher Overview

Duration: **45–60 minutes**

Materials:

- 1 Pedro robot (assembled)
- small objects (cube, pencil, eraser)
- worksheet
- whiteboard

Teaching approach:

- inquiry-based learning
- hands-on discovery
- teamwork
- problem solving

🎮 Mission Scenario

Welcome to the Pedro Robotics Lab!

Today you are not just students.

You are **robotics engineers**.

Your mission is to explore a new robot called **Pedro**.

Pedro is a robotic arm designed to help humans perform tasks such as:

- moving objects
- assembling products
- performing precise operations

But before building and programming Pedro in future lessons, you must first **understand how robots work**.

Table of Contents

🎯 Learning Objectives....2
🧑‍🏫 Teacher Overview....2
🎮 Mission Scenario....3
Activity 1 — What Is a Robot?....4
Activity 2 — Observe Pedro....5
Activity 3 — Identify Robot Components....5
Activity 4 — Discover Robot Movement....5
Activity 5 — Pedro's First Task....6
STEM Insight....7
Reflection....7
Pedro Program Roadmap....7
📝 Quiz — Check Your Understanding....7
1. What does the acronym P.E.D.R.O. stand for?....8
2. What is a robot?....8
3. What component is the brain of the robot?....8
4. What component allows the robot to move?....8
5. What does the gripper do?....8
6. Why do robots need energy?....8
7. What is an actuator?....8
8. What type of robot is Pedro?....9
9. Name one real-world use of robotic arms....9
10. Why are robots useful?....9
11. What will you learn in the next lessons?....9
✅ Answer Key....9

Activity 1 — What Is a Robot?

Ask students:

What do you think a robot is?

Let students discuss in small groups.

Then explain:

A robot is a machine that can:

1. **Sense** the environment
2. **Process** information
3. **Act** by moving or performing tasks

Example robots:

- factory robotic arms
- Mars rovers
- medical robots
- warehouse robots

Pedro is a **robotic arm**, similar to those used in industry.

Activity 2 — Observe Pedro

Place the Pedro robot in front of the class.

Ask students to observe it carefully.

Discussion questions:

- What parts can you see?
- How many motors do you think it has?
- How do you think it moves?

Students write their ideas.

Activity 3 — Identify Robot Components

Explain the main components of Pedro.

Component	Function
Controller Board	The brain of the robot
Servo Motors	Create movement
Robot Structure	Holds the robot together
Gripper	Allows the robot to grab objects
Power Supply	Provides energy

Teacher tip: Let students **touch and inspect the robot.**

Activity 4 — Discover Robot Movement

The Pedro Anatomy : As robotic arm Pedro is equipped with **four servomotors**, each serving a distinct purpose in its movement. Three servomotors control the movement axes, while the fourth servomotor is dedicated to the gripper.

- The **first servomotor** controls the base rotation, facilitating horizontal movement translation.
- The **second servomotor** manages the shoulder, enabling vertical rotation.
- The **third servomotor** operates the elbow, facilitating pick-up movements.
- Finally, the **fourth servomotor** controls the gripper, enabling Pedro to grasp objects securely.

Demonstrate the robot.

Move the different joints.

Explain that Pedro moves like a **human arm**.

Robot Joint	**Similar to Human Body**
Base	Shoulder rotation
Arm	Upper arm
Forearm	Lower arm
Gripper	Hand

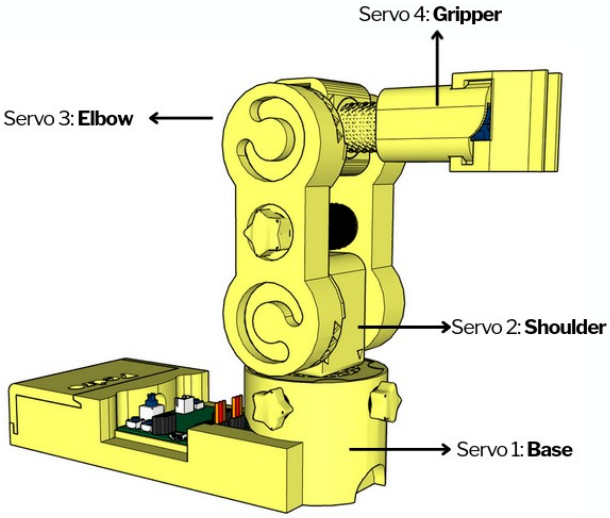

Ask students:

How many directions can the robot move?

Activity 5 — Pedro's First Task

Setup:
Place an object on the table.

Mission:
Pedro must pick up the object and move it to another location, or simply move some of his axes (base, elbow, gripper, etc.).

Ask the students:

- How does Pedro move? → Introduce the concept of **servos**.
- How does Pedro know which axis should move? → Introduce the concept of an **embedded system** and **coding**.

This activity introduces the concept of **robot task planning**.

STEM Insight

Robots use **actuators** to move.

An actuator converts **energy into motion**.

In Pedro, the actuators are **servo motors**.

These motors allow the robot to move **with precision**.

Reflection

Ask students:

- Where are robots used in real life?
- How could robots help people?
- What tasks could Pedro perform?

Pedro Program Roadmap

Explain the future lessons.

Students will learn how to:

- build Pedro
- understand the Pedro board
- control robot movements
- use Bluetooth and radio communication
- program the robot

📝 Quiz — Check Your Understanding

1. What does the acronym P.E.D.R.O. stand for?

A) Programmable Electric Device for Robotic Operation
B) Programmable Educational Robot
C) Printed Electronic Design Robotic Object
D) Personal Educational Digital Robot
✅ **Answer:**

2. What is a robot?

A) A machine that can perform tasks automatically
B) A type of computer game
C) A human assistant
D) A mobile phone
✅ **Answer:**

3. What component is the brain of the robot?

A) Battery
B) Motor
C) Microcontroller
D) Gripper
✅ **Answer:**

4. What component allows the robot to move?

A) Sensors
B) Actuators / Motors
C) Battery
D) Frame
✅ **Answer:**

5. What does the gripper do?

A) Stores energy
B) Controls the robot
C) Grabs and holds objects
D) Powers the robot
✅ **Answer:**

6. Why do robots need energy?

A) To look better
B) To move and operate their components
C) To communicate with humans
D) To change color
✅ **Answer:**

7. What is an actuator?

A) A device that converts energy into movement
B) A type of sensor
C) A computer screen

D) A robot arm
✅ **Answer:**

8. What type of robot is Pedro?

A) Industrial welding robot
B) Educational robotic arm
C) Medical robot
D) Cleaning robot
✅ **Answer:**

9. Name one real-world use of robotic arms.

A) Playing video games
B) Assembling cars in factories
C) Charging phones
D) Watching movies
✅ **Answer:**

10. Why are robots useful?

A) They can do dangerous or repetitive tasks
B) They replace all humans
C) They only entertain people
D) They only work at night
✅ **Answer:**

11. What will you learn in the next lessons?

A) How to program and control the robot
B) How to build a car
C) How to cook
D) How to play music
✅ **Answer:**

✅ Answer Key

1. B
2. A
3. C

4. B
5. C
6. B
7. A
8. B
9. B
10. A
11. A

END
Pedro STEM Lesson n°1