STEM Lesson n°3

Build Your Robot

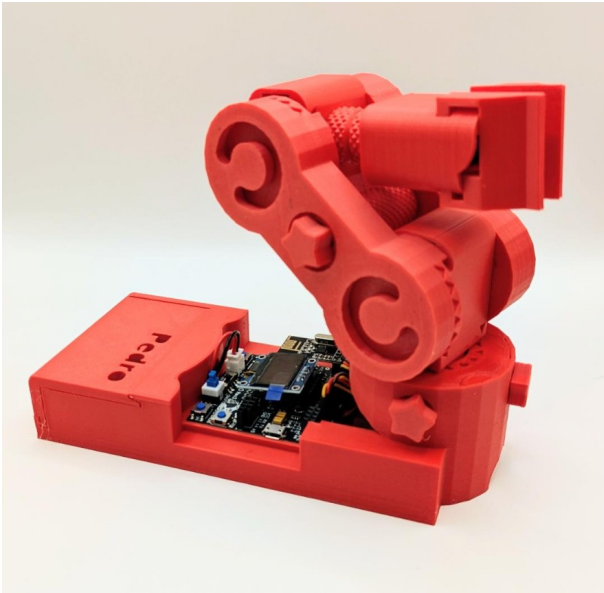

v1.0.0

PDF Tricks
(*To make sure the PDF file that opens in your browser shows the most up-to-date version, add a version query to the URL, like this:*
*https://almtzr.github.io/PedroSTEM/stem_lessons/Pedro_Lesson_3.pdf?**v=2**)*

🎯 Learning Objective

In this lesson, students will assemble the Pedro robot while discovering how robotic arms are designed.

They will explore the mechanical structure of a robot, learn about servo motors, and understand how planetary gear systems improve motion and precision.

Students will also discover how 3D printing enables rapid robotic prototyping.

This lesson combines engineering, mechanics, and fabrication in a hands-on experience.

By the end of this lesson, students will be able to:

- Understand the mechanical structure of a robotic arm
- Identify the four servomotors used in Pedro
- Explain the purpose of a planetary gear system
- Understand how 3D printing is used in robotics design
- Assemble the Pedro robot step-by-step
- Test the robot's mechanical movements

👨‍🏫 Instructor Notes

- Recommended age: 12+
- Difficulty Level : Beginner → Intermediate
- Teaching Approach
  - Project-based learning
  - Collaborative teamwork
  - Engineering exploration
- Duration: 90 – 120 minutes

🧰 Required Materials

Each student or team needs a Pedro Robot Full Kit:

- All 3D printed parts
- Pedro Rev3 Electronic Board
- 4x Continuous rotation servomotors
- 2x Ball bearings (8×22×7 mm)
- 7.4V Li-ion battery
- Computer with Arduino IDE

Table of Contents

🎯 Learning Objective..... 2
👨‍🏫 Instructor Notes..... 2
🧰 Required Materials..... 2
1. Materials Check..... 4
2. Pedro Design..... 5
2.1 The Pedro Anatomy..... 5
2.2 Planetary Gear System..... 6
2.3 Why use a planetary system on Pedro?..... 7
3. What Is 3D Printing?..... 7
4. Assembling..... 9
Step 1: The Base..... 9
Step 2: The Gripper..... 10
Step 3: The Arm..... 11
4. Quiz (14 Questions)..... 12

1. What Makes Pedro Unique?

Pedro is a 100% 3D-printed robotic arm. Unlike many robots, Pedro is designed to be simple to assemble and fully open source. A unique feature of Pedro is that no screws or glue are required. All parts snap together using precision 3D-printed joints. This makes Pedro perfect for STEM classrooms and robotics workshops.

2. Materials Check

Before starting the assembly, students must verify that **all parts are present**.
Students work in teams and check each component by putting an ✅ next to each part of Pedro robot.

✅ All Pedro 3D printed parts
✅ Pedro Rev3 Electronic Board
✅ 2 ball bearings 8x22x7 mm
✅ 4 continuous rotation (360°) servomotors
✅ 7.4V DC battery

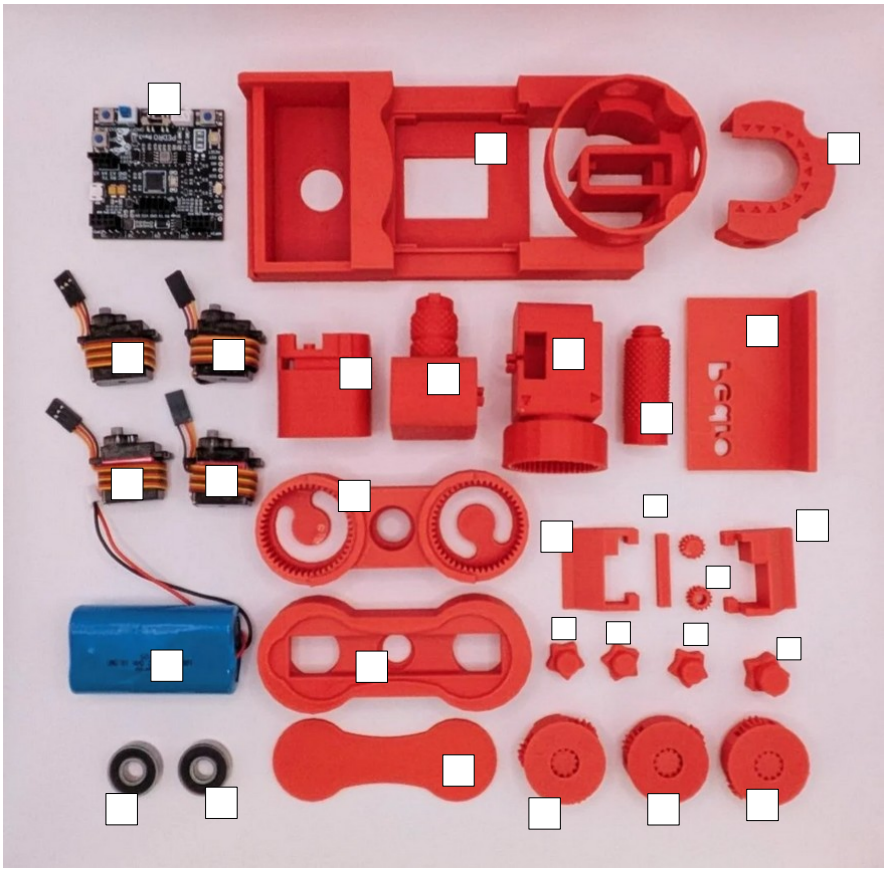

Figure 1

💡 **What You Should Know About Pedro**

All the parts of Pedro are 3D printed. As you can see, there are no screws in the pieces that make up Pedro. Which makes Pedro a 100% 3D-printed robot.

3. Pedro Anatomy

Understanding the Robot Structure

Pedro is a **robotic arm with four degrees of motion**. It uses **four servomotors**, each responsible for a specific function.

Servo	**Function**
Base Servo	Horizontal rotation
Shoulder Servo	Vertical lifting
Elbow Servo	Arm extension
Gripper Servo	Object grasping

Together these motors allow Pedro to perform **precise robotic movements**.

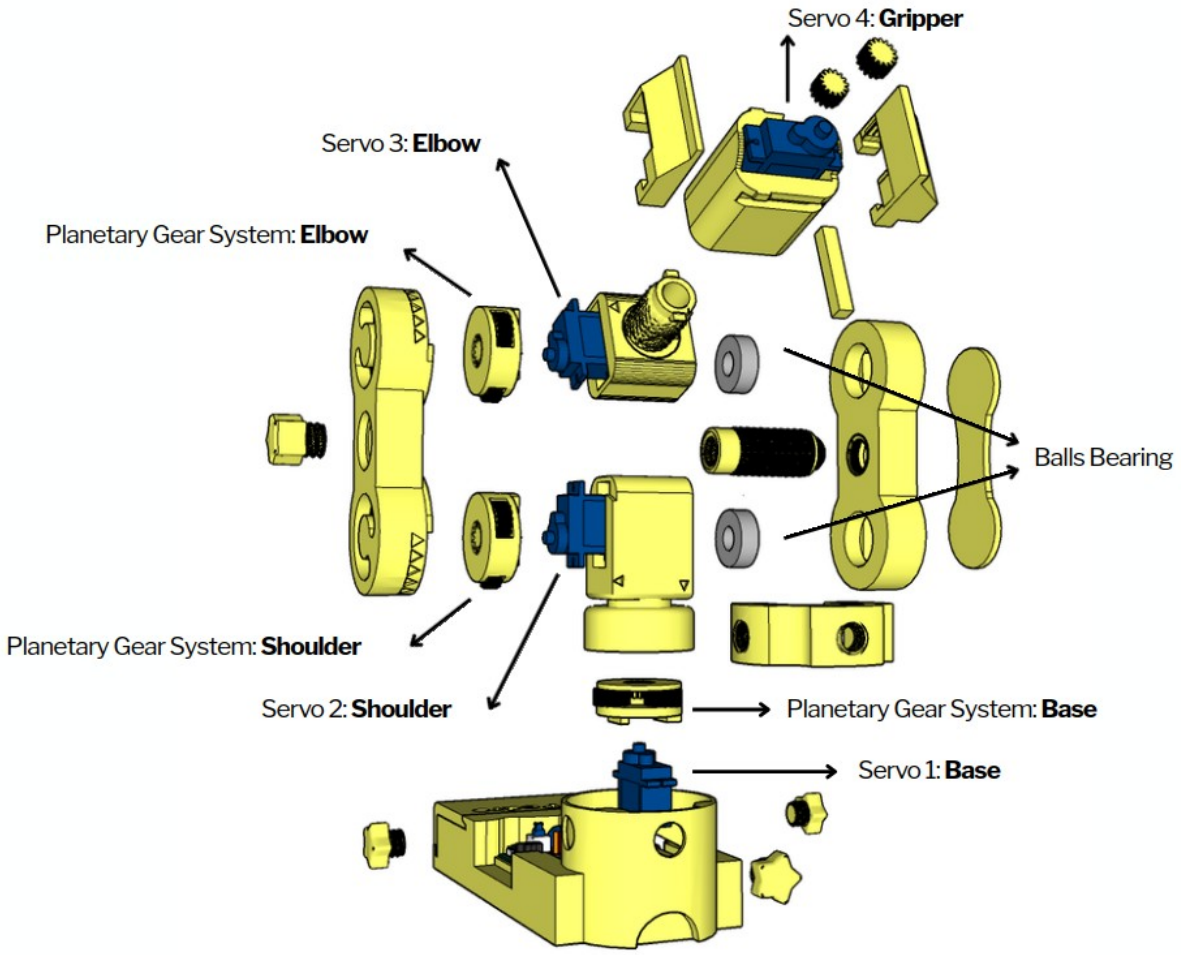

3.1 What Is a Planetary Gear System?

Pedro features three planetary motion modules, fully 3D-printed. These modules enable smooth and precise movements, powered by a continuous servomotor motor placed at the center of each joint.

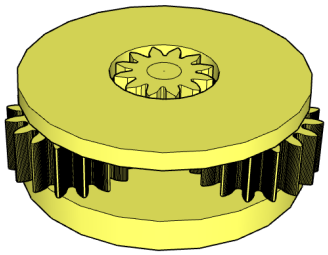

Figure 2: Planetary gear system

A planetary gearbox is a gear mechanism that optimizes motion transmission by reducing speed and increasing torque. It consists of:

⚙️ The sun gear: the central gear (driven by the motor)
⚙️ The planet gears: three gears rotating around the sun
⚙️ The ring gear (here replaced by Pedro's structure), holding everything together

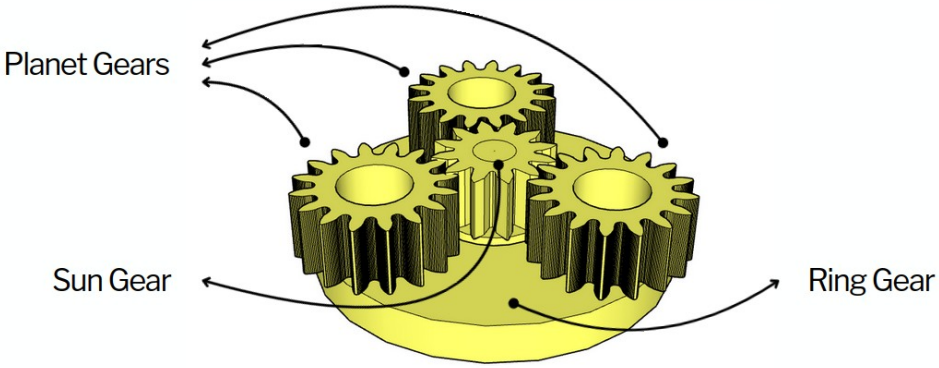

Figure 3: Planetary gear system

3.3 Why use a planetary system on Pedro?

✅ Increased power and precision
✅ Compact and robust design
✅ Fully 3D-printable with no complex parts

This system allows Pedro to execute smooth and precise movements in its three main joints: the base, shoulder, and elbow. No screws, no glue just 100% 3D printed.

3. Understanding 3D Printing

Pedro is designed to be **fully manufacturable with a 3D printer**. 3D printing creates objects by depositing material **layer by layer**.

Common materials used:

- PLA plastic
- ABS plastic

Before printing a part, several important steps are needed:

The 3D Printing Workflow

1. Design the part in CAD software
2. Export the design as an STL file
3. Convert the STL file to G-code
4. Send the G-code to the 3D printer

Pedro requires only **four main printable models**: BASE.stl, SERVO.stl, ARM.stl, GEAR.stl
These files are available in the Pedro open-source repository (https://github.com/almtzr/Pedro).

Students can download them and **print their own robot parts** if needed.

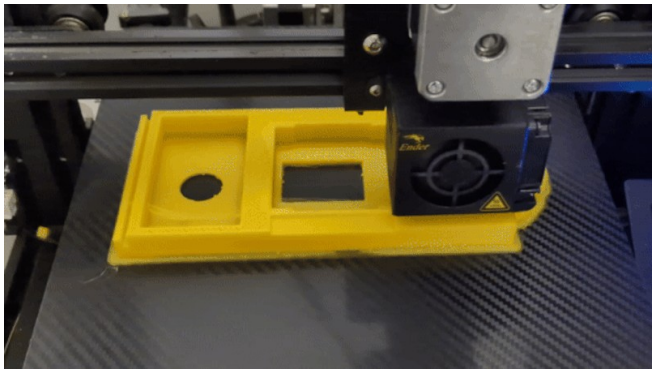 BASE.stl	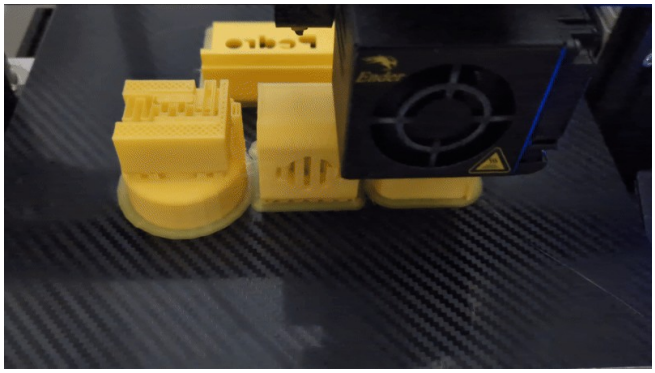 SERVO.stl
ARM.stl	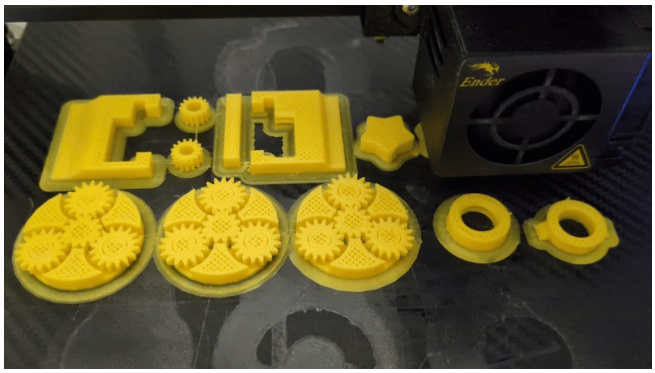 GEAR.stl

4. Assembly Instructions

💡 *Pedro is entirely screw-free — all parts snap together easily!*

Now students will assemble Pedro step by step. Teacher may demonstrate the first step.
Students then complete the build in teams.

Step 1: Building the Base

Insert the first servomotor into the base structure and connect it to the Board pin D5. This motor controls horizontal rotation. Attach the planetary gear module to the servo shaft. Check that the base rotates smoothly.

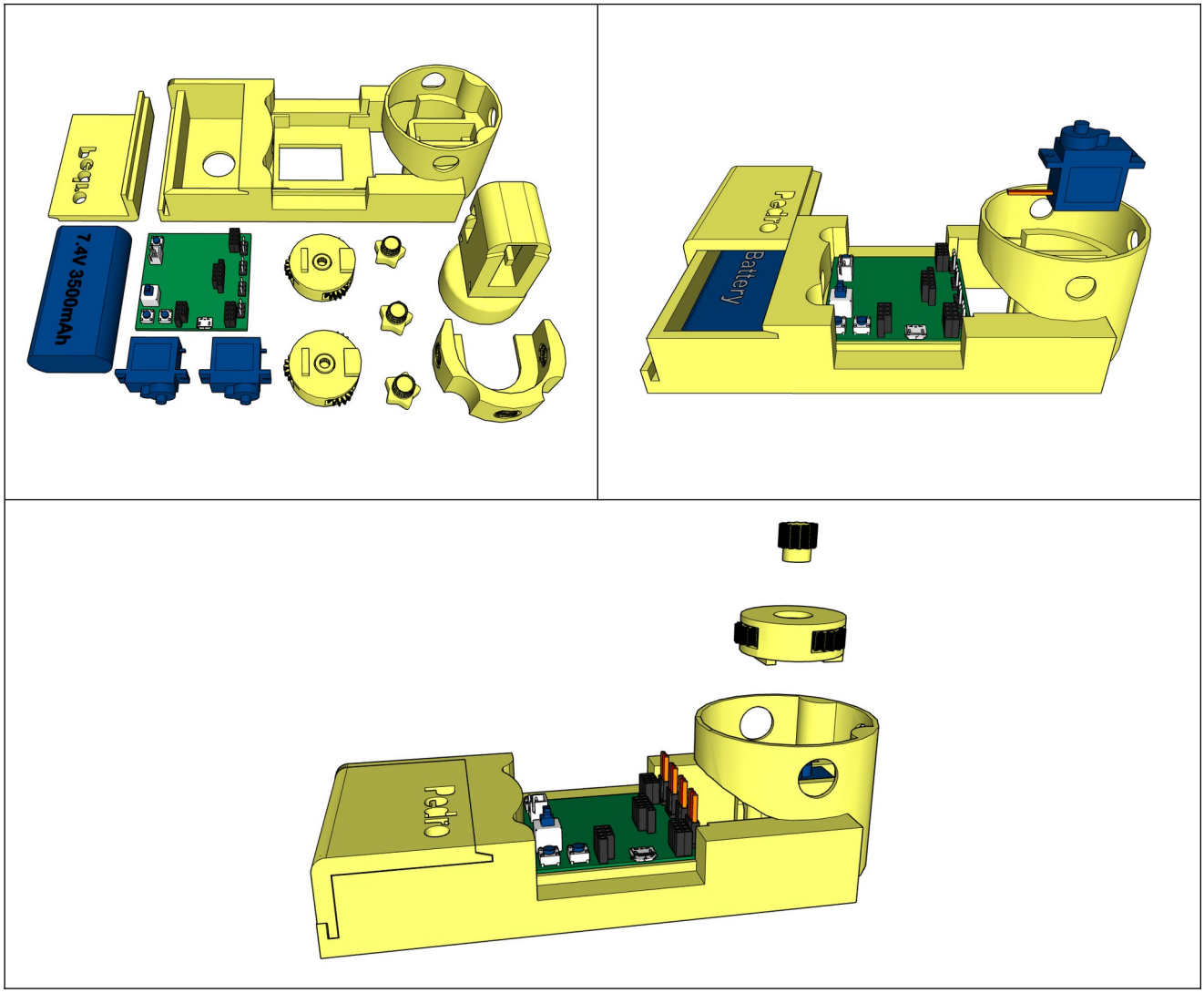

Step 2: The shoulder

Insert the second servomotor into the Shoulder part and connect it to the Board pin D6.
Attach the planetary gear module to the servo shaft like described.

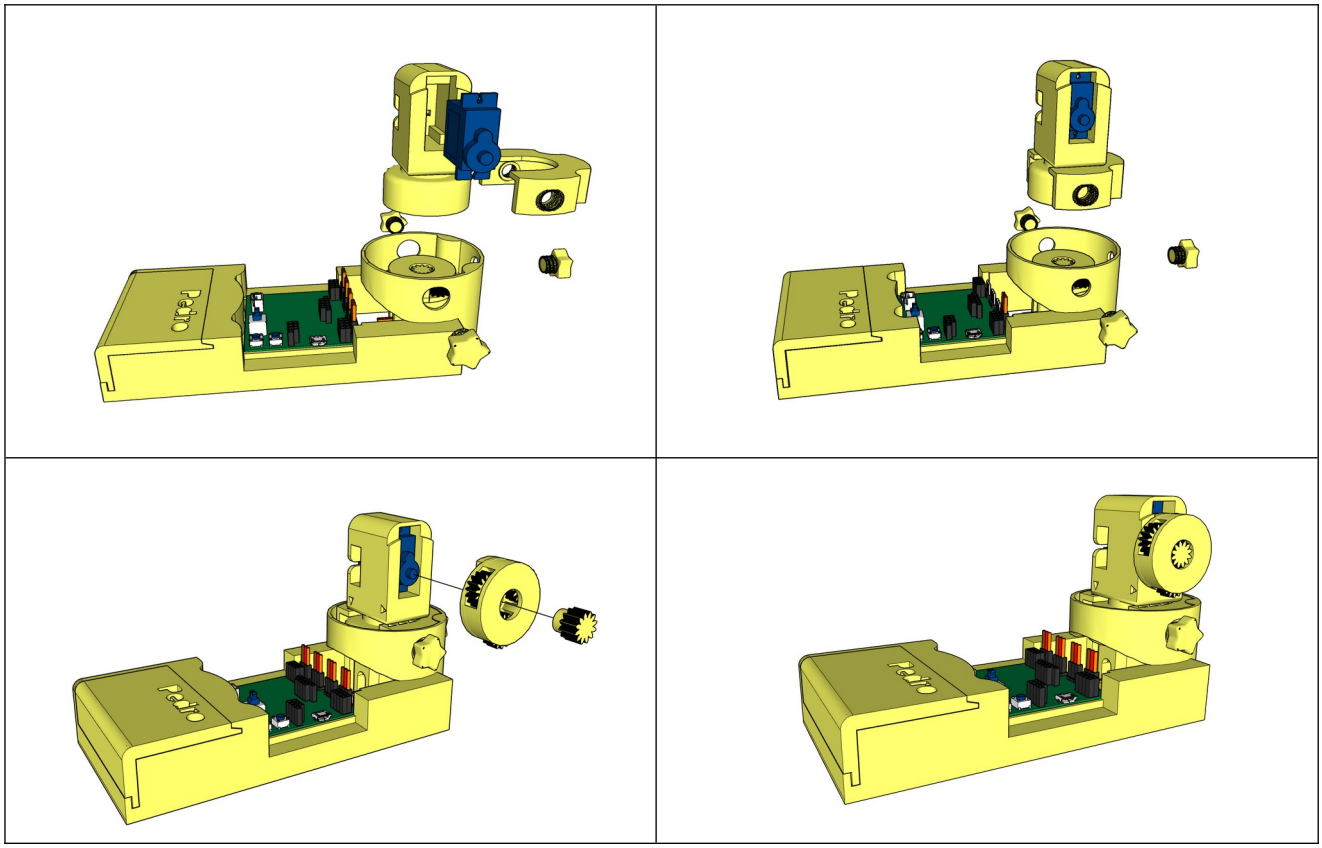

Step 3: Building the Gripper

Assemble the gripper with the fourth servo. Ensure it opens and closes smoothly.

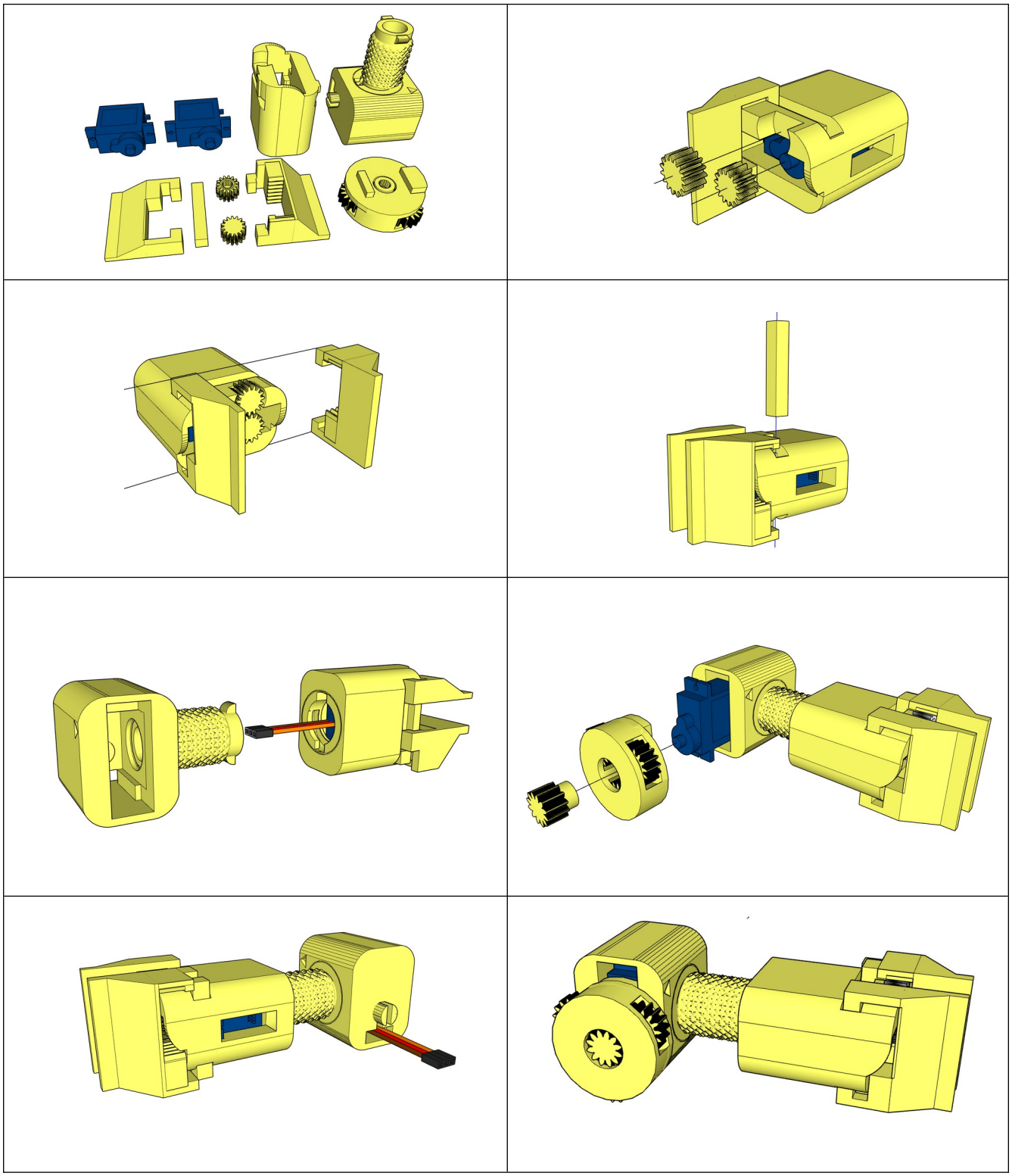

Step 4: Assembling the Arm

Connect the shoulder and elbow servos. Check each movement before final assembly.

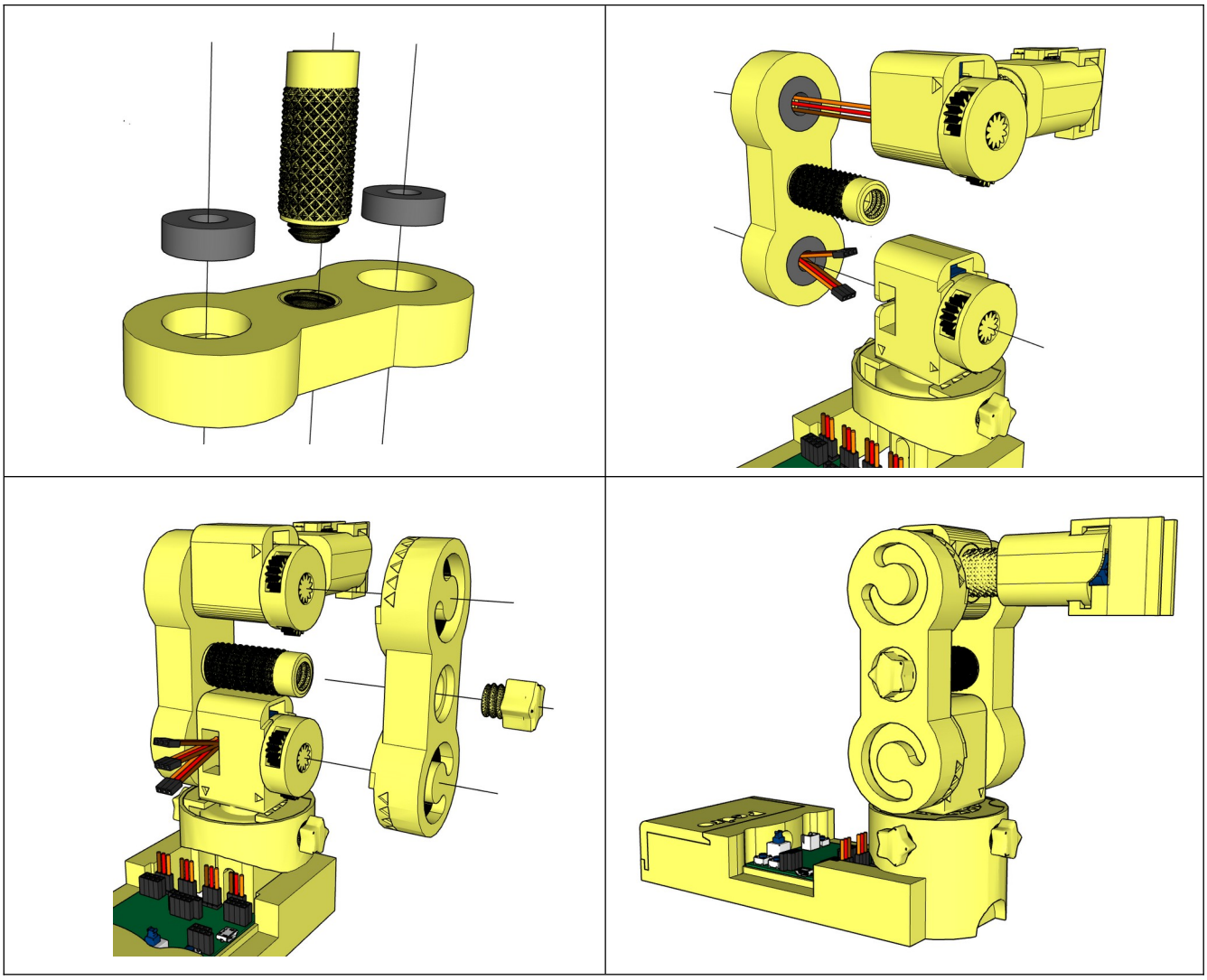

5. Reflection Discussion

Teacher asks students:

- Why do robots use gears?
- What advantages does 3D printing provide?
- Why are servomotors useful for robotics?
- Where are robotic arms used in real life?

Students connect classroom learning with **real engineering applications**.

📝 Quiz — Check Your Understanding

1. What does the acronym P.E.D.R.O. stand for?
A) Programmable Electric Device for Robotic Operation
B) Programmable Educational Robot
C) Printed Electronic Design Robotic Object
D) Personal Educational Digital Robot
✅ **Answer:**

2. What is the main goal of the Pedro Lesson 1?
A) Build a drone
B) Discover the Pedro robot
C) Learn 3D modeling only
D) Program a mobile app
✅ **Answer:**

3. What kind of motor does Pedro use?
A) Stepper motors
B) Brushed DC motors
C) Continuous rotation servomotors (360°)
D) Hydraulic actuators
✅ **Answer:**

4. How many servomotors are used in Pedro?
A) 2
B) 3
C) 4
D) 5
✅ **Answer:**

5. What is the purpose of the first servomotor?
A) Controls the gripper
B) Controls the base rotation for horizontal movement
C) Controls the shoulder
D) Controls the elbow
✅ **Answer:**

6. What does the fourth servomotor control?
A) The base
B) The shoulder
C) The elbow
D) The gripper
✅ **Answer:**

7. What material is used to print Pedro's parts?
A) Aluminum
B) PLA or ABS plastic
C) Steel
D) Nylon
✅ **Answer:**

8. What tool is used to generate 3D printer instructions from a design file?
A) STL file
B) G-code
C) CAD model
D) Firmware
✅ **Answer:**

9. What is the first step in 3D printing a part?
A) Generate G-code
B) Export to STL
C) Design in CAD
D) Print immediately
✅ **Answer:**

10. What makes Pedro unique in its construction?
A) It is 100% 3D printed with no screws
B) It uses wooden parts
C) It is laser-cut
D) It is glued together
✅ **Answer:**

11. What type of bearing system does Pedro use?
A) Magnetic bearings
B) Ball bearings
C) Roller bearings
D) Gear bearings
✅ **Answer:**

12. What is the purpose of the planetary gear system in Pedro?
A) To reduce torque and increase speed
B) To increase torque and improve precision
C) To provide electrical power
D) To connect sensors
✅ **Answer:**

13. How many planetary motion modules does Pedro have?
A) 1
B) 2
C) 3
D) 4
✅ **Answer:**

14. Which gear in the planetary system is driven by the motor?
A) The planet gear
B) The sun gear
C) The ring gear
D) The outer shell
✅ **Answer:**

END
Pedro STEM Lesson n°3