STEM Lesson n°5

Radio Mode

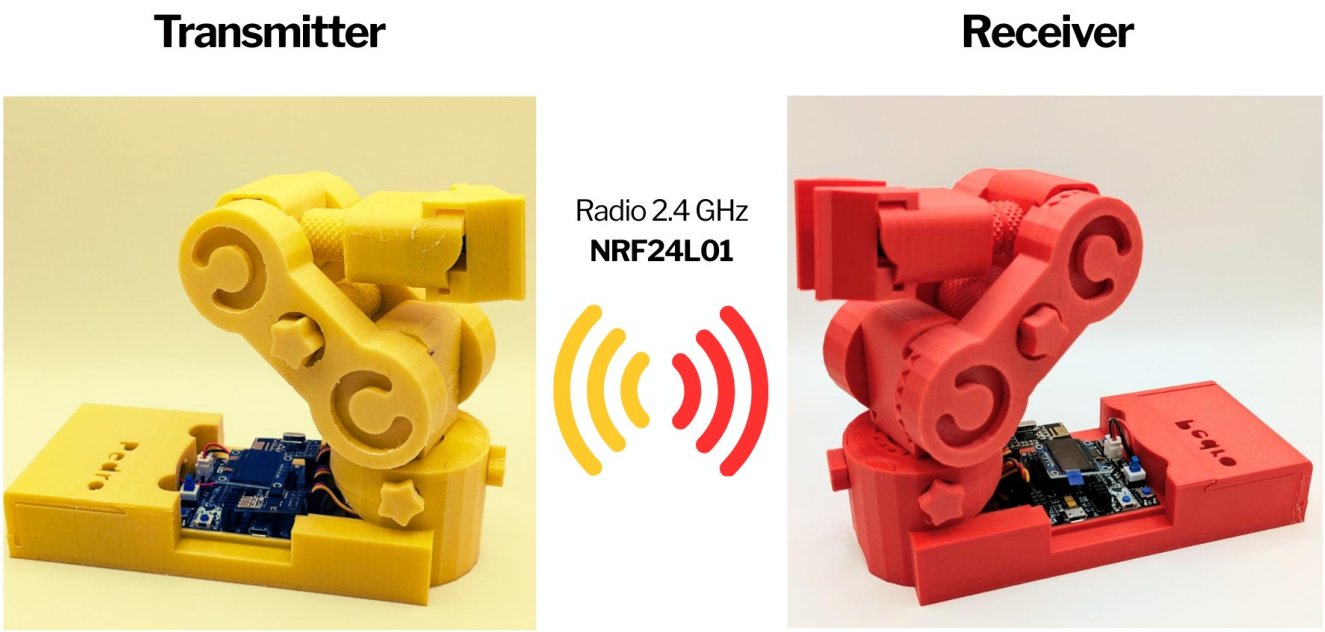

v1.0.0

PDF Tricks
(*To make sure the PDF file that opens in your browser shows the most up-to-date version,*
add a version query to the URL, like this:
*https://almtzr.github.io/PedroSTEM/stem_lessons//Pedro_Lesson_5.pdf?****v=2****)*

🎯 Learning Objective

In this lesson, students will discover how robots can **communicate wirelessly** using radio signals.

By the end of the lesson, students will be able to:

• Understand how two robots exchange information
• Configure a transmitter and a receiver
• Control one robot remotely using another

👨‍🏫 Instructor Notes

- Recommended age: 12+
- Difficulty Level: Beginner → Intermediate
- Prerequisites: Lesson 1, 2, 3
- Duration: 90 – 120 minutes

💡 **Tip: Encourage students to predict what will happen before testing**

🧰 Required Materials

Per student or team:

- 2 x Pedro robots Assembled
- 2 x NRF24L01 modules
- USB cable
- Computer with Arduino IDE installed

Table of Contents

🎯 Learning Objective..... 2
🧑‍🏫 Instructor Notes..... 2
🧰 Required Materials..... 2
1. Install the Pedro Program..... 4
2. Control Modes Overview..... 5
3. Radio Mode..... 6
4. Activities..... 7
🎯 Activity 1 — First Connection..... 7
🎯 Activity 2 — Mirror Movement..... 8
🎯 Activity 3 — Measuring Radio Communication Range..... 8
🎯 Activity 4 — Break the Connection..... 9
🧠 Reflection Questions..... 9
📝 Quiz — Check Your Understanding..... 10

1. Install the Pedro Program

(Skip this step if already completed in Lesson n°3)

The **Pedro Program** is the core software that powers and controls the robot. It acts as the robot's "brain," managing all behaviors and interactions.
Through this single program, students can access and explore multiple control modes, allowing them to understand how a robot receives instructions, processes them, and translates them into physical actions.

- **Download and install** the latest version of the Arduino IDE.
- **Install the required libraries** from the Library Manager:
  - PedroRobot: Tools → Manage Libraries → search PedroRobot → Install
  - U8glib: Tools → Manage Libraries → search U8glib → Install
  - RF24: `Tools → Manage Libraries → search` **`RF24`** `→ Install`
- **Insert** the Oled Screen into the Pedro board and **Connect** the board to your computer via USB.
- **Select the correct port**:
  - Tools → Select the port that appear when you connect Pedro robot
- **Select the board type**:
  - Tools → Board → Arduino Micro
- **Open the example sketch**:
  - File → Examples → PedroRobot → Pedro
- **Compile and upload** the sketch to your Pedro board.

✅ *If everything is correct, Pedro's OLED screen will display "MANUAL MODE".*

- Press the button **A0** and observe what happen.
  The LED corresponding to the selected servo light on. That button allows you to control each part of the robot. Here is the mapping between the LED ID and the servo ID
  - `LED D13 → servo D5 (Base)`
  - `LED D11 → servo D6 (Shoulder)`
  - `LED D8  → servo D9 (Elbow)`
  - `LED D7  → servo D10 (Gripper)`

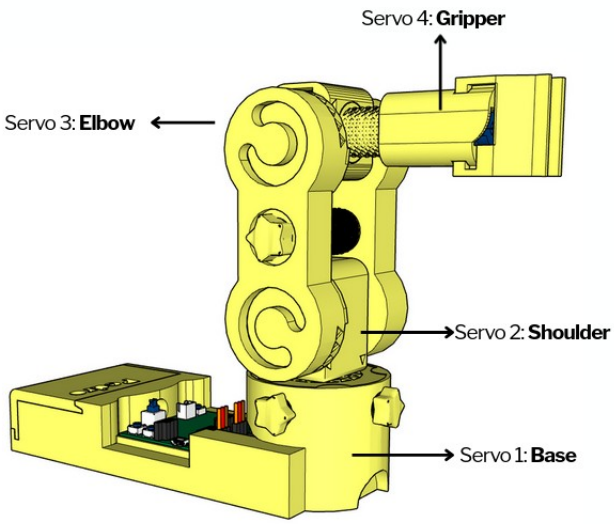

2. Control Modes Overview

Using the **128x64 OLED display**, users can easily navigate through the menu to **select and configure** different modes of operation. The available control modes are:

- **Manual Mode** – direct control using onboard buttons
- **Record & Replay Mode** – record and replay movements
- **Bluetooth Mode** – control Pedro via smartphone or PC
- **Radio Mode** – remote communication between robots
- **USB Serial Mode** – control Pedro directly from a computer

Through this firmware, students discover how software can define robotic behavior and how multiple communication interfaces can coexist within one system. The picture below described how to navigate through the multiple control modes.

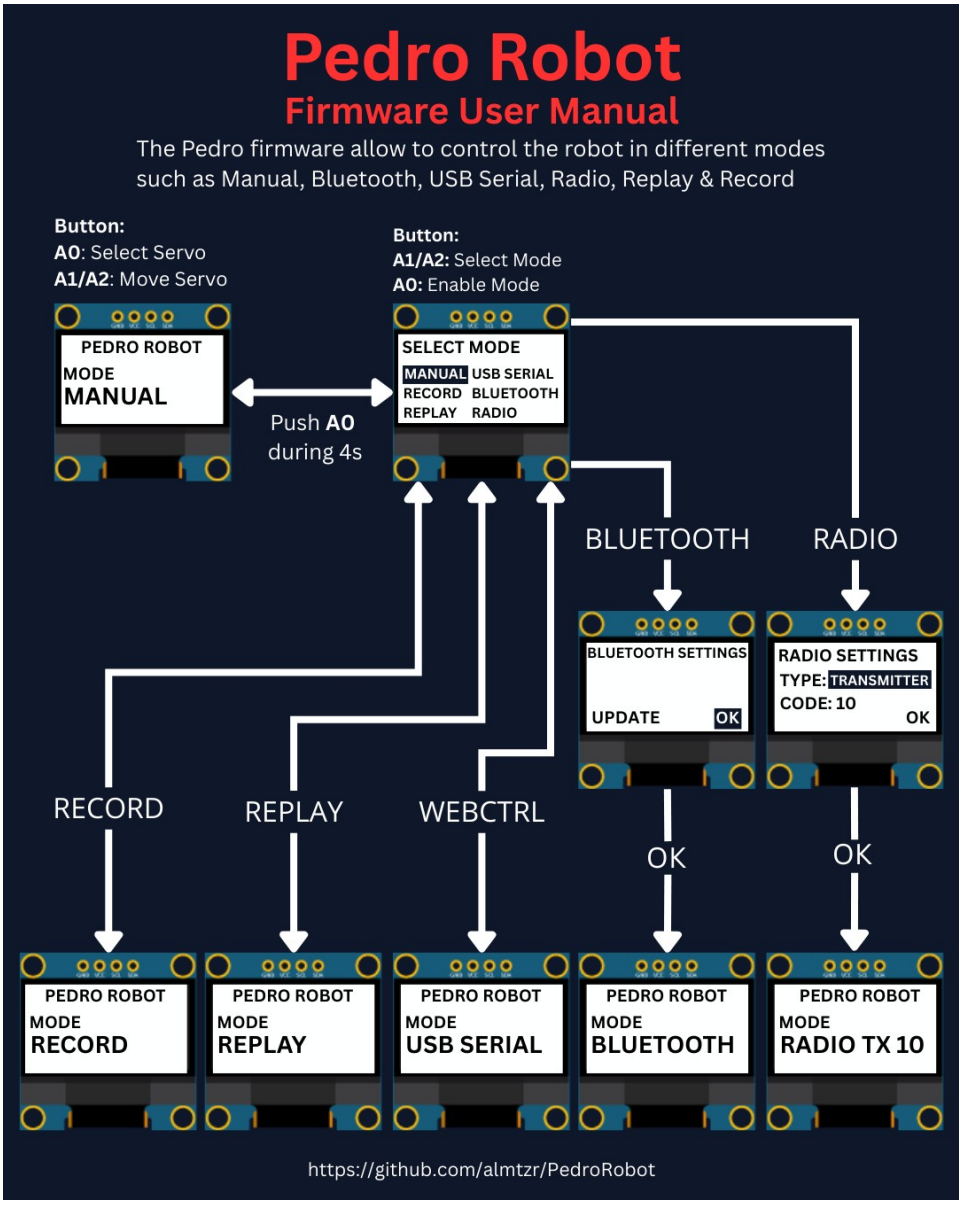

3. Radio Mode

Radio Mode allows two Pedro robots to communicate using the NRF24L01 module :
👉 One robot sends commands (**Transmitter**)
👉 The other receives and executes them (**Receiver**)

💡 This is exactly how drones, remote-controlled cars or industrial robots are controlled in real life.

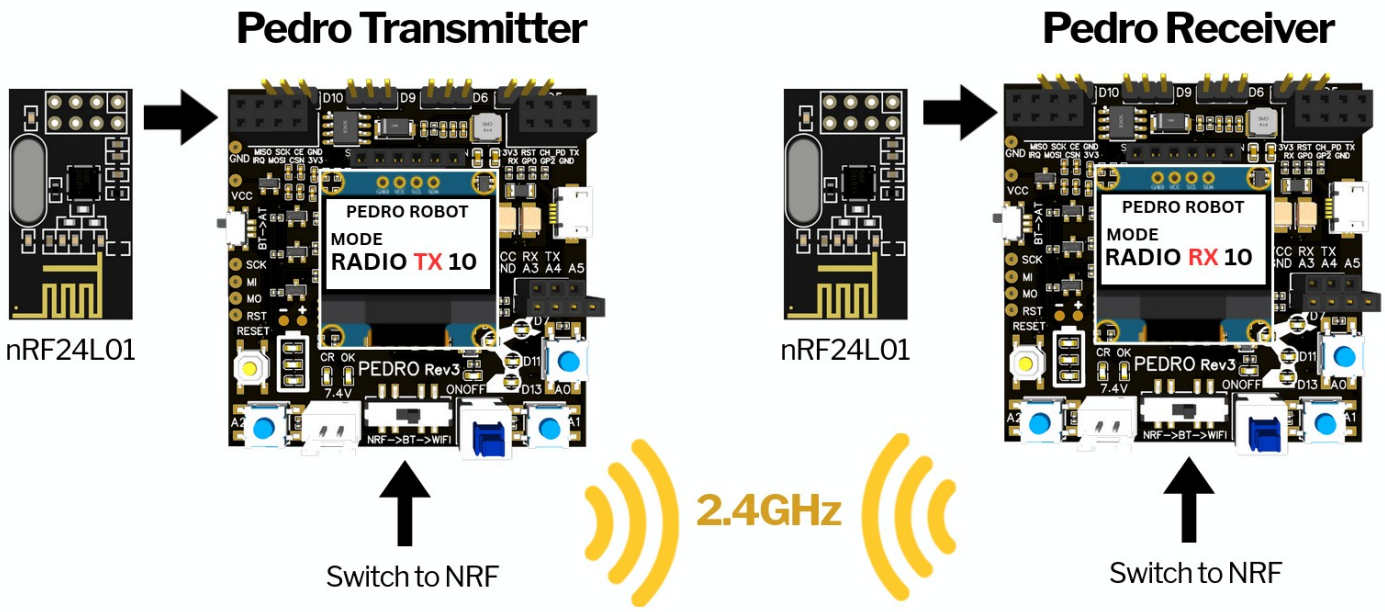

How to use:

1. Insert the **NRF24L01 modules** into both robots
2. Set Pedro's switch **NRF** → **BT** → **WiFi** to **NRF**
3. Restart both robots
4. Enter the **Select Mode** menu (hold **A0** for 4 seconds).
5. Select **Radio** mode from the menu and press **A0** to confirm.
6. Define the robot's role (type): press **A1** to select **TRANSMITTER** or **RECEIVER**.
7. Press **A0** to confirm the role.
8. Set a communication Code Key:
    - Press **A1** to increase (increment)
    - Press **A2** to decrease (decrement)
    - Values range from 1 to 99

💡 **Note:** Both the transmitter and receiver must use the same Code Key to establish communication.
👉 Think of it like a password for communication

9. Press **A0** to confirm the Code Key.
10. Press **A0** again to validate (**OK**).

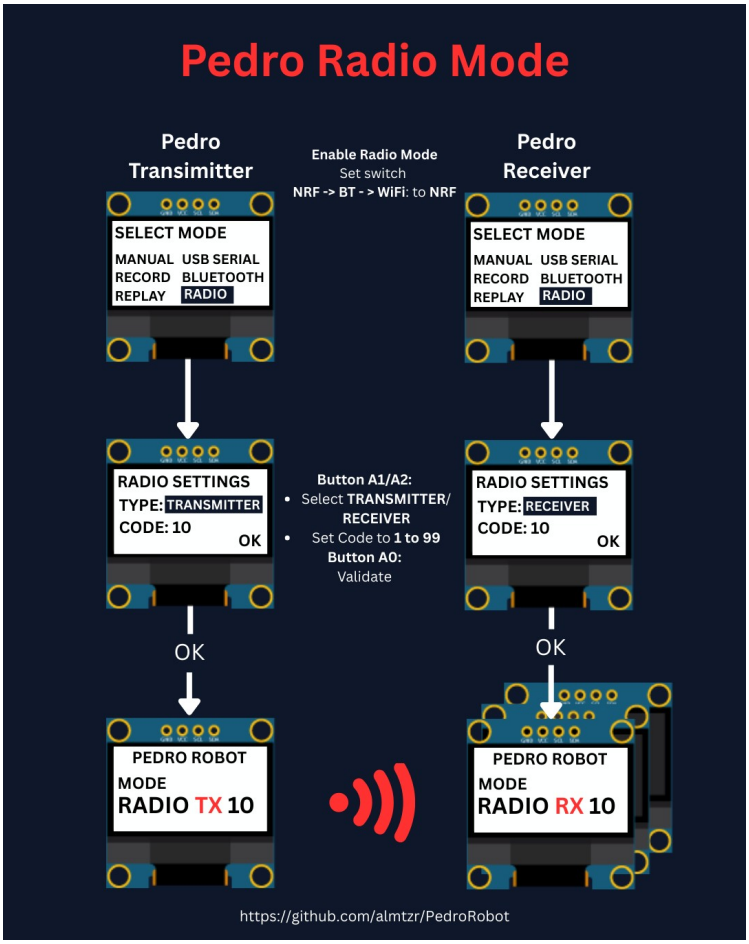

Radio Mode Configuration Overview

4. Activities

🎯 Activity 1 — First Connection

Mission

Make both robots connect.

Student Actions

Once the two Pedro robot are configured as transmitter and receiver. Press **A0** on trasmitter

Observation

👉 Do LEDs light up on both robots? The LED corresponding to the selected servo light on simultaneously on the Pedro transmitter and the receiver. That indicates that the radio communication between both is established.

🎯 Activity 2 — Mirror Movement

Mission

Control one robot using the other.

Student Actions

• Press A1 /or A2 on transmitter
• Observe receiver

Observation: Do both robots move at the same time?

🎯 Activity 3 — Measuring Radio Communication Range

Mission

Students will measure the **maximum communication distance** between two Pedro in an open space.

They will compare **Real-world performance** vs **theoretical specifications**

According to the manufacturer:

👉 **NRF24L01:** typical range: **30 to 50 meters (indoor),** up to **100 meters (open space)**
💡 Note: Real performance depends on environment, obstacles, and power supply.

Experiment

Step 1: Move Away

• One student stays with the RECEIVER
• One student walks away with the TRANSMITTER

Step 2: Every few meters (5m 10m 20m 50m 100m 150m etc)

Press A1 or A2 and observe the RECEIVER: does it still respond?

Step 3: Find the Limit

Continue until: ❌ The receiver **no longer responds**

Step 4: Measure Distance

• Measure or estimate the distance
• Record the result

📋 Data Collection Table

Distance (m)	Signal Working?	Notes
5	Yes	
10	Yes	
20	Yes	
...	...	
Max	No	Lost signal

🎯 Activity 4 — Break the Connection

Mission

Understand what breaks communication.

Experiment

• Change Code Key on one robot
• Test again

👉 What happens?

💡 Expected: No communication

🧠 Reflection Questions

• Why is wireless communication useful?
• What happens if signals are interrupted?
• Where do we use this in real life?

📝 Quiz — Check Your Understanding

1. Radio Mode enables communication between _____ robots.
A) Two
B) One
C) Three
D) Four
✅ **Answer:**

2. The NRF24L01 module is used for:
A) Power
B) Display
C) Wireless communication
D) Sound
✅ **Answer:**

3. A transmitter:
A) Receives data
B) Sends data
C) Stores data
D) Deletes data
✅ **Answer:**

4. A receiver:
A) Sends data
B) Receives data
C) Prints data
D) Ignores data
✅ **Answer:**

5. The Code Key is:
A) Voltage
B) Password for communication
C) Speed
D) Memory
✅ **Answer:**

6. If Code Keys are different:
A) Works faster
B) No communication
C) LED brighter
D) Nothing changes
✅ **Answer:**

7. The Code Key range is:
A) 0-9
B) 1-99
C) 100-999
D) 0-255
✅ **Answer:**

8. LED sync indicates:
A) Error
B) No battery
C) Connection established
D) Shutdown
✅ **Answer:**

9. Robots moving together is called:
A) Isolation
B) Synchronization
C) Rotation
D) Compilation
✅ **Answer:**

10. In Radio Mode, both robots must use the same:
A) Battery level
B) Serial port
C) Code Key
D) USB cable
✅ **Answer:**

Work in progress...

END
Pedro STEM Lesson n°5