STEM Lesson n°2

« Explore the Various Control Modes »

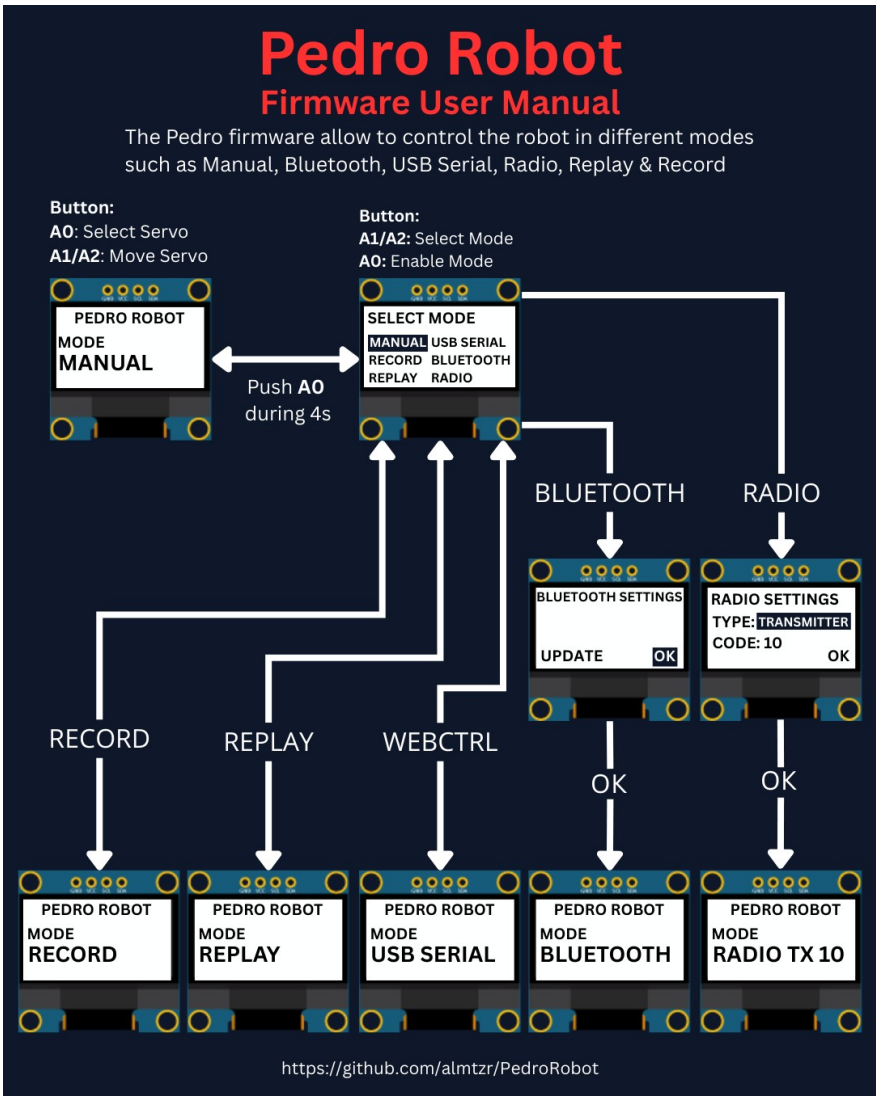

v1.0.1

PDF Tricks

*(To make sure the PDF file that opens in your browser shows the most up-to-date version, add a version query (**?v=2**) to the URL, like this: https://almtzr.github.io/PedroSTEM/stem_lessons//Pedro_Lesson_X.pdf?**v=2**)*

🎯 Learning Objective

In this lesson, students will explore different control modes in robotics through the multiple communication systems integrated into the Pedro robot. It is strongly recommended to complete **Lesson n°1 « Discover Robotics by Building Pedro »** before starting this activity. This lesson introduces students to various **robotic communication methods** using Pedro's control modes, including:

- **Manual Mode**
- **Record & Replay Mode**
- **Radio Mode**
- **USB Serial Mode**
- **Bluetooth Mode**

👨‍🏫 Instructor Notes

- Recommended age: **12 years and older**
- Ideal for **STEM clubs, classroom workshops, or science projects**
- Students should have **basic computer literacy**
- Duration: ~**2 hours**

🧰 Required Materials

Item	Quantity	Description
Pedro Robot Full Assembled	10 units	1 robot by student
Oled Screen 128x64	1 unit	Screen to naviagate through Pedro menu
Module NRF24L01	1 unit	Radio communication
Module HC-05	1 unit	Bluetooth communication
Micro USB cable	1 unit	USB communication

🧩 Final Activity

At the end of the workshop:

- Students complete a 2**0-question quiz** to review key concepts.
- Teachers can discuss real-world applications of robotics and 3D printing.

Table of Contents

🎯 Learning Objective..... 2
👨‍🏫 Instructor Notes..... 2
🧰 Required Materials..... 2
🧩 Final Activity..... 2
1. Pedro Firmware Setup..... 4
2. Control Modes..... 5
2.1 Manual Mode..... 6
2.2 Record & Replay Mode..... 7
2.3 Radio Mode..... 8
2.4 USB Serial Mode..... 9
2.5 Bluetooth Mode..... 10
3. Quiz (20 Questions)..... 11

1. Pedro Firmware Setup

The Pedro Firmware is the main program that powers and controls the Pedro robot.
It allows students to explore **multiple control modes** all within a single program to better understand how robots receive and execute commands.

1. **Download and install** the latest version of the Arduino IDE.
2. **Install the required libraries** from the Library Manager:
   - **`PedroRobot`**: `Tools → Manage Libraries → search` **`PedroRobot`** `→ Install`
   - **`U8glib`**: `Tools → Manage Libraries → search` **`U8glib`** `→ Install`
   - **`RF24`**: `Tools → Manage Libraries → search` **`RF24`** `→ Install`
3. **Insert** the Oled Screen into the Pedro board and **Connect** the board to your computer via USB.
4. **Select the correct port**:
   - Tools → Select the port that appear when you connect Pedro robot
5. **Select the board type**:
   - Tools → Board → Arduino Micro
6. **Open the example sketch**:
   - File → Examples → PedroRobot → Pedro
7. **Compile and upload** the sketch to your Pedro board.

   ✅ *If everything is correct, Pedro's OLED screen will display "MANUAL MODE".*

2. Control Modes

Using the **128x64 OLED display**, users can easily navigate through the menu to **select and configure** different modes of operation.

The available control modes are:

- **Manual Mode** – direct control using onboard buttons
- **Record & Replay Mode** – record and replay movements
- **Bluetooth Mode** – control Pedro via smartphone or PC
- **Radio Mode** – remote communication between robots
- **USB Serial Mode** – control Pedro directly from a computer

Through this firmware, students discover how software can define robotic behavior and how multiple communication interfaces can coexist within one system. The picture below described how to navigate through the multiple control modes.

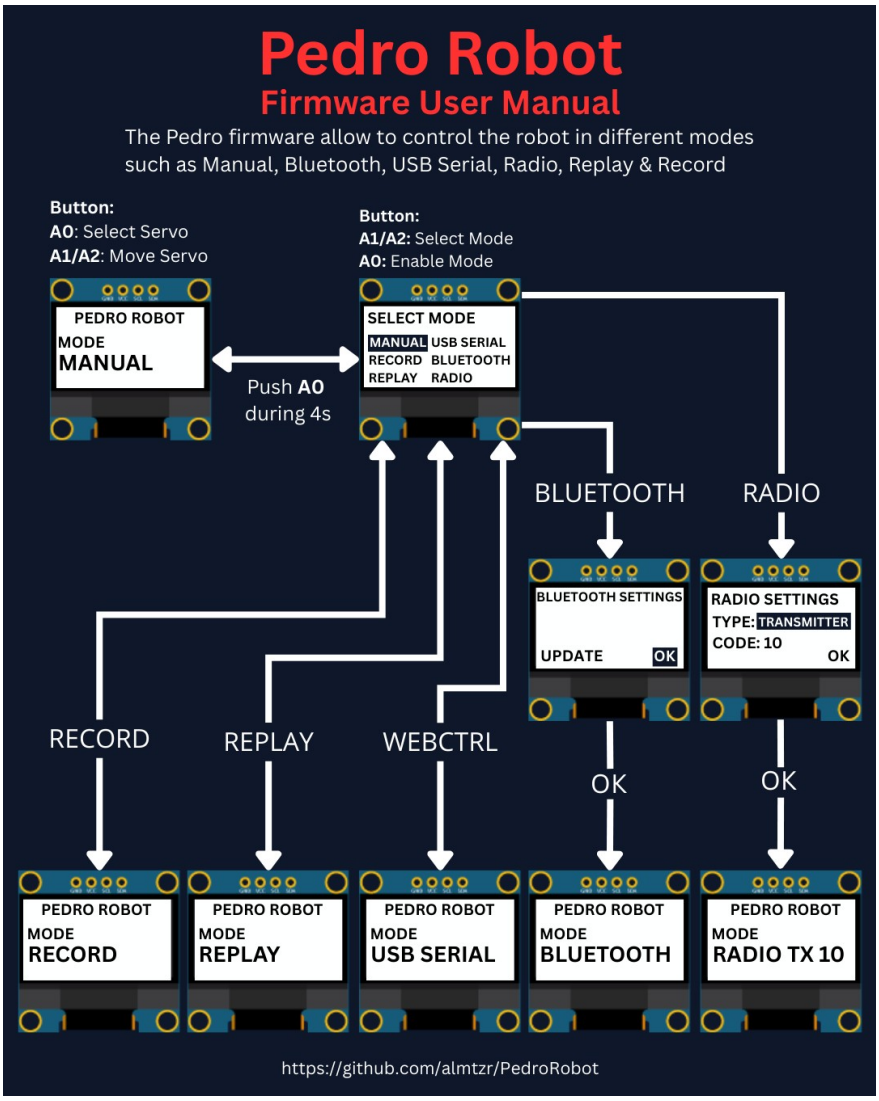

2.1 Manual Mode

What it does: Direct control of servo motors using onboard buttons.

How to use:

1. Power **ON** Pedro (default mode **Manual**).
2. Press the button **A0** to select the servo.
   The LED corresponding to the selected servo light on. That button allows you to control each part of the robot. Here is the mapping between the LED ID and the servo ID :
   - `LED D13 → servo D5 (`**`Base`**`)`
   - `LED D11 → servo D6 (`**`Shoulder`**`)`
   - `LED D8  → servo D9 (`**`Elbow`**`)`
   - `LED D7  → servo D10 (`**`Gripper`**`)`
3. Use button **A1** to Move Servo to Left.
4. Use button **A2** to Move Servo to Right.

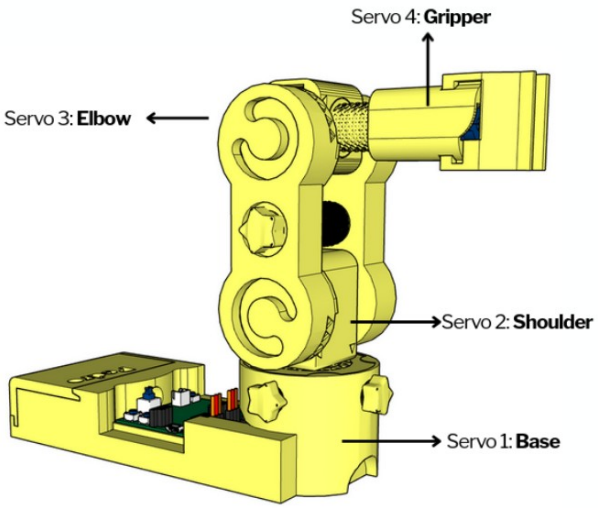

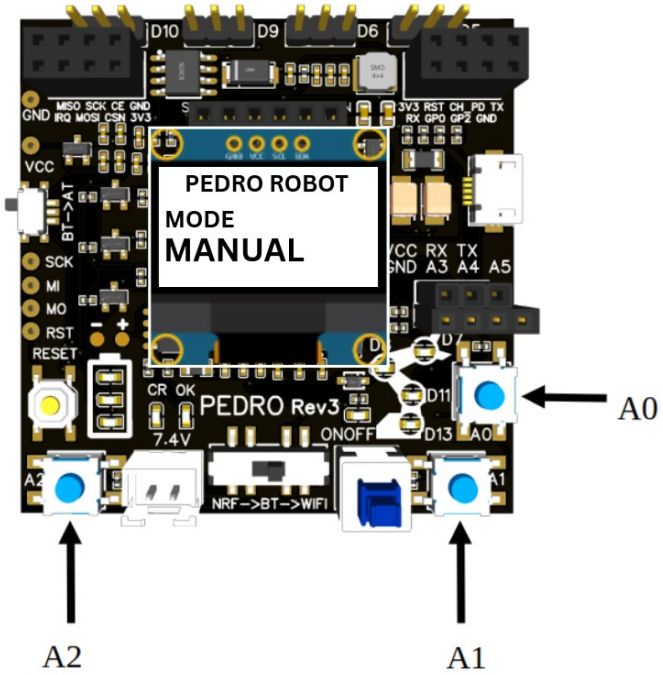

2.2 Record & Replay Mode

What it does: Record servo movements, then replay them.
How to use:

1. Enter the **Select Mode** menu (hold button **A0** for 4 seconds).
2. Choose **Record Mode** from the menu.
3. Press **A0** to confirm.
4. Move Pedro manually using the buttons (as in **Manual Mode**).
5. Re-enter the **Select Mode** menu (hold **A0** for 4 seconds).
6. Select **Replay Mode**.
7. Pedro will now repeat the recorded sequence in a loop.
8. To stop or change, re-enter the **Select Mode** menu.

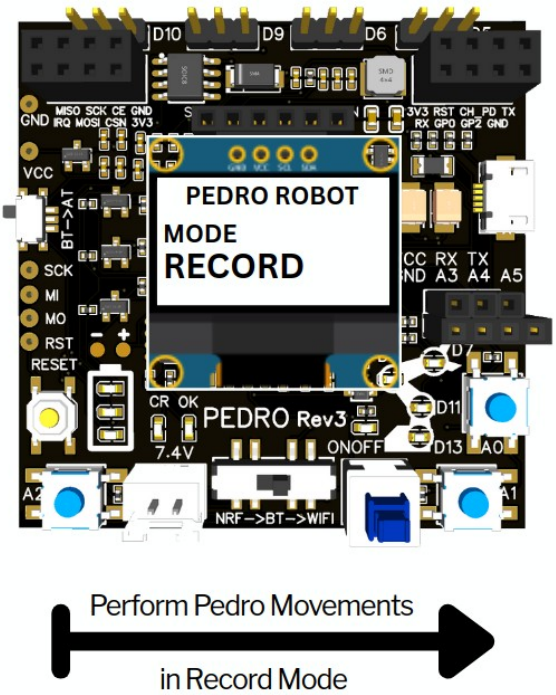

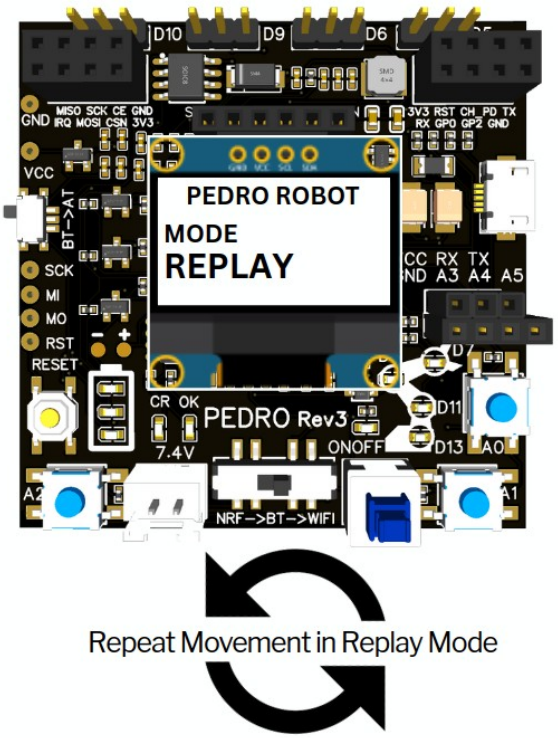

2.3 Radio Mode

What it does: Enables remote communication between two Pedro robots or more using the NRF24L01 radio module.

How to use:

1. Insert the **NRF24L01 module** into the left slot of each Pedro board (one robot as transmitter, the other as receiver).
2. Set Pedro's switch **NRF → BT → WiFi** to **NRF**.
3. Power cycle your board (turn it OFF and then ON again).
4. Enter the **Select Mode** menu (hold button **A0** for 4 seconds).
5. Choose **Radio Mode** from the menu.
6. Press **A0** to confirm.
7. Define the robot's role (type): press **A1** to select **TRANSMITTER** or **RECEIVER**.
8. Press **A0** to confirm the role.
9. Set a communication Code Key:
    - Press **A1** to increase (increment)
    - Press **A2** to decrease (decrement)
    - Values range from 1 to 99
10. Press **A0** to confirm the Code Key.
11. Press **A0** again to validate (OK).

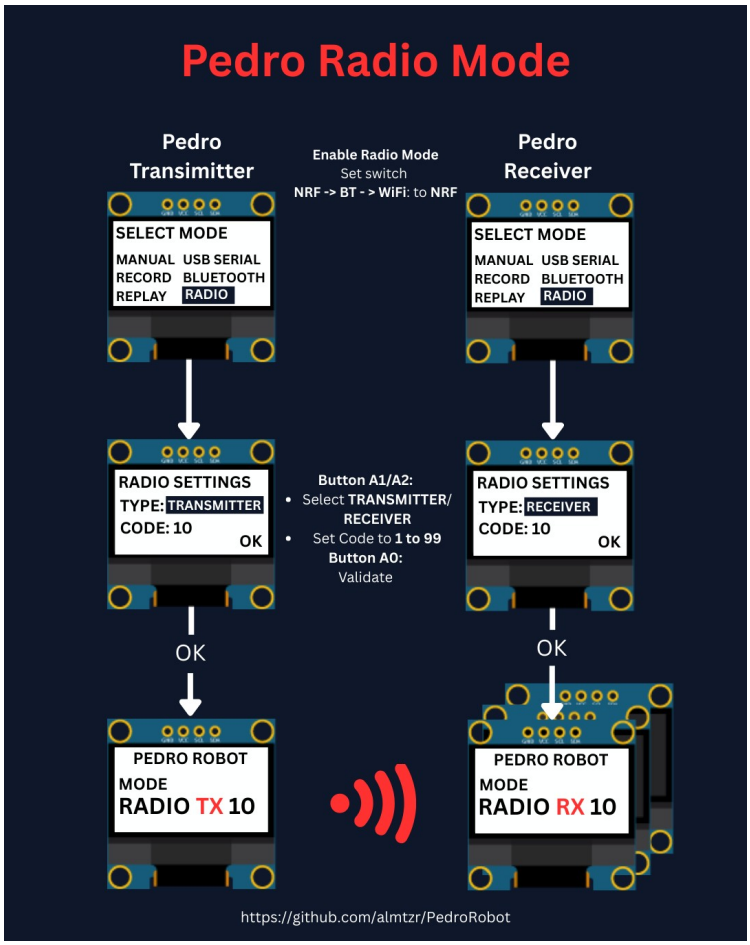

💡 **Note:** Both the transmitter and receiver must use the same Code Key to establish communication.

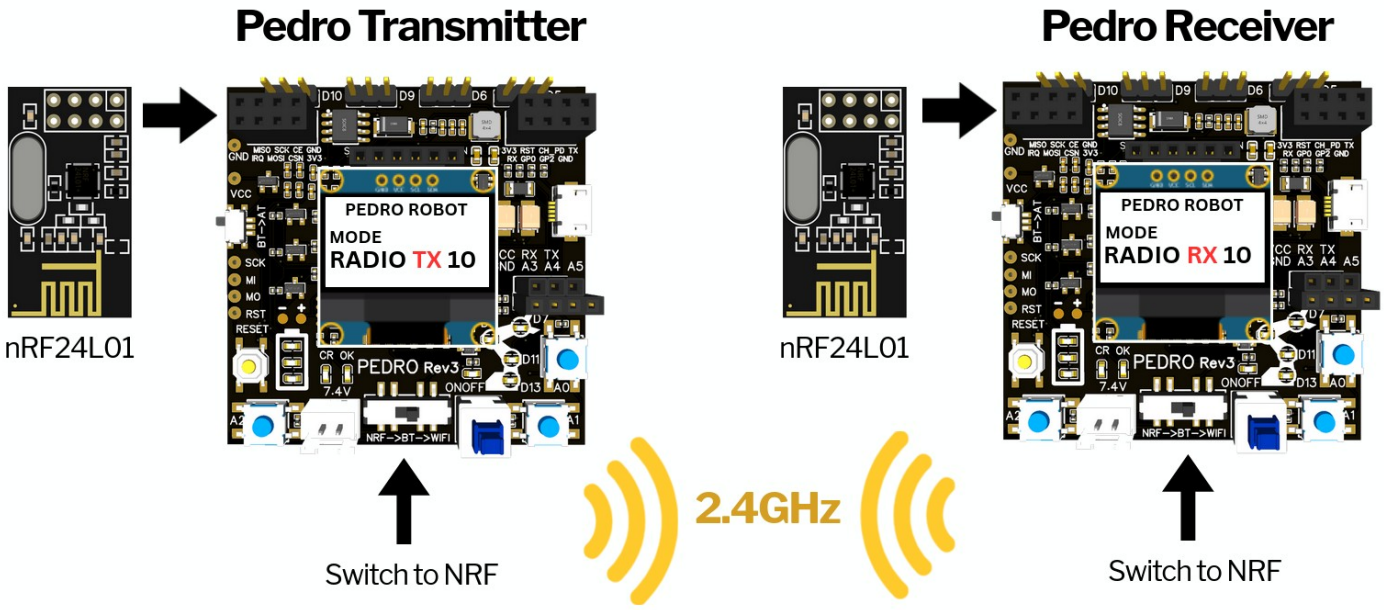

2.4 USB Serial Mode

💡 **Note:** For this mode, you must use a compatible browser such as **Chrome**, **Edge**, or **Brave** on desktop. **Chrome** has been successfully tested with this application.

What it does: Control Pedro from your PC with web controller app.
How to use:

1. Enter the **Select Mode** menu (hold button **A0** for 4 seconds).
2. Choose **USB SERIAL MODE** from the menu and press **A0** to confirm.
3. Connect Pedro via USB cable.
4. Launch the web controller (https://www.pedrobot.com/webcontroller.html) app.
5. In the web controller click, the **« Connect Pedro »** button.
6. Select the corresponding Pedro serial port.
7. Click the « **Servo N** » button to select a servo. The LED corresponding to the selected servo lights up. That button allows you to control each part of the robot.
8. Use the « **Left** » button to move servo to the left.
9. Use the « **Right** » button to move servo to the right.
10. Use the « **Stop** » button to stop the movement.

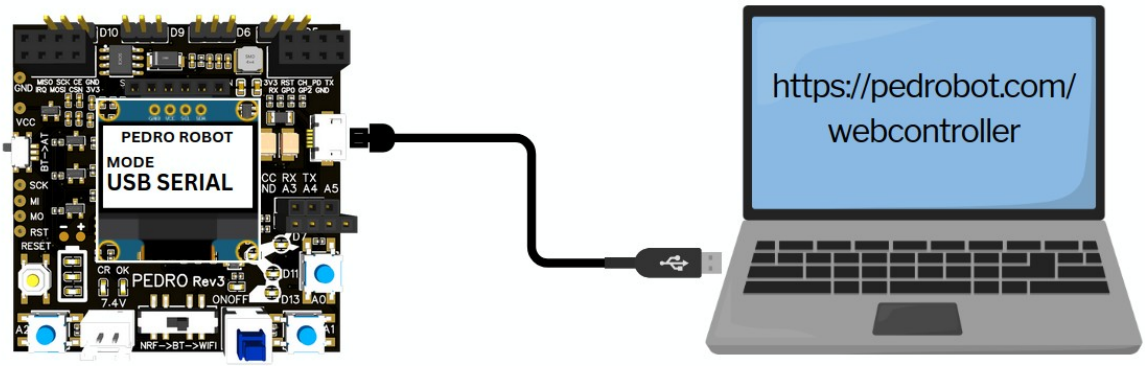

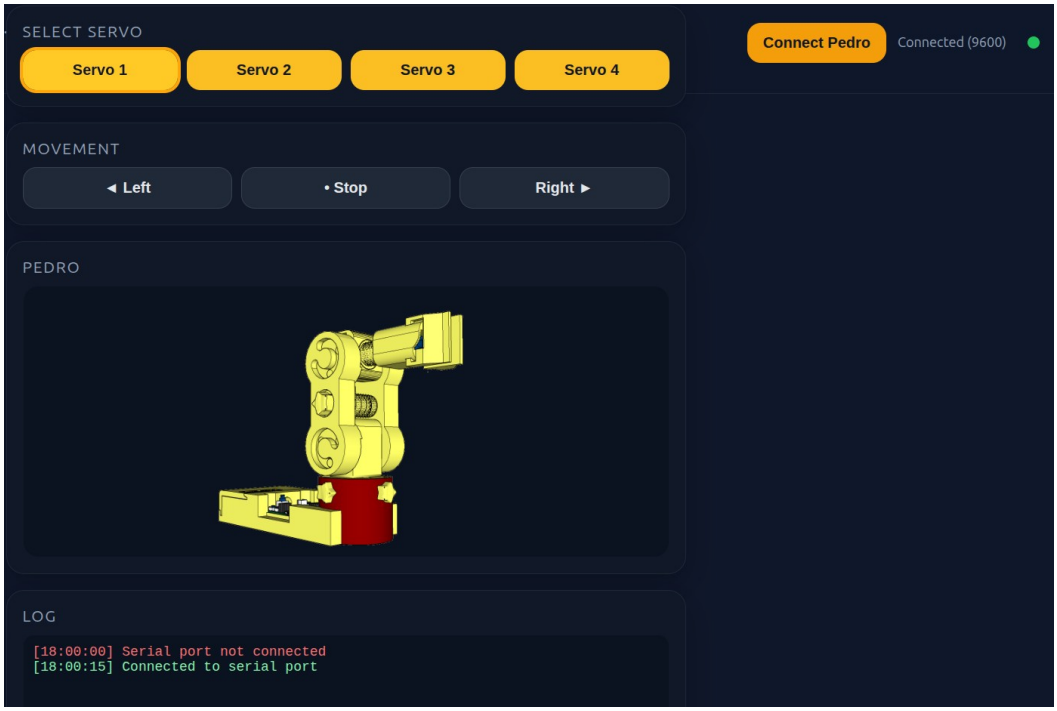

2.5 Bluetooth Mode

What it does: Control Pedro via smartphone or PC.
How to use:

1. Download the **Serial Bluetooth** app (iOS or Android).
2. Create 7 control buttons with the following configuration:

- Name: **Servo1** → Value: **1** → Mode: **Text** → Action: **Send**.
- Name: **Servo2** → Value: **2** → Mode: **Text** → Action: **Send**.
- Name: **Servo3** → Value: **3** → Mode: **Text** → Action: **Send**.
- Name: **Servo4** → Value: **4** → Mode: **Text** → Action: **Send**.
- Name: **FwD** (Forward) → Value: **5** → Mode: **Text** → Action: **Send**.
- Name: **BwD** (Backward) → Value: **6** → Mode: **Text** → Action: **Send**.
- Name: **Stop** → Value: **7** → Mode: **Text** → Action: **Send**.

3. On Pedro, set the switch **AT** → **BT** to **BT**.
4. Pair your device with Pedro's HC-05 module (default name: HC-05, PIN: 1234).
5. Use the app buttons to send commands and control Pedro in real time.

🛠️ **Optional – How to change Pedro's Bluetooth name: AT Mode**

1. Power **OFF** Pedro.
2. Set switch **NRF** → **BT** → **WiFi** to **BT**.
3. Set switch **BT** → **AT** to **AT**.
4. Power **ON** Pedro.
5. Enter the **BLUETOOTH UPDATE** menu.
6. Change Pedro's Bluetooth name (e.g. from **PEDROROBOT1** up to **PEDROROBOT99**).
7. Pair your device with the new name (PEDROROBOTX).
8. Use the app buttons **(Serial Bluetooth)** to control Pedro as before.

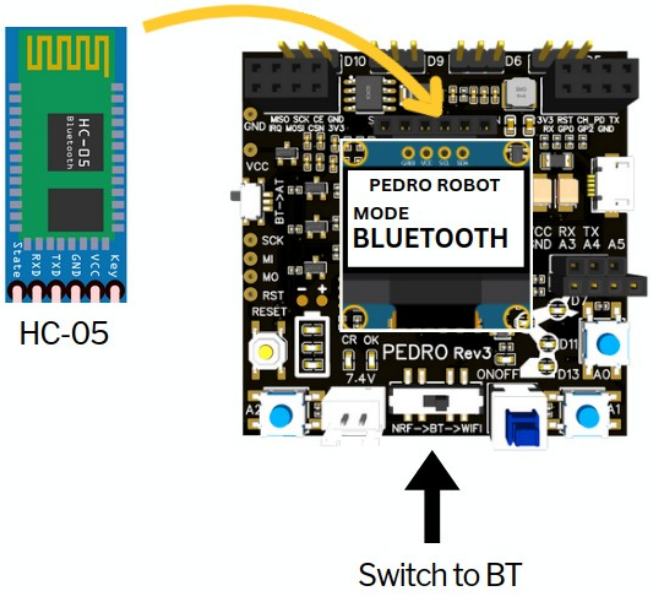

3. Quiz (20 Questions)

1. Which component of the Pedro board is considered the “brain”?
A) OLED display
B) ATmega32u4 microcontroller
C) Servo motor
D) Battery
✅ **Answer:**

2. The OLED screen size on the Pedro board is:
A) 64×32
B) 128×64
C) 16×2
D) 320×240
✅ **Answer:**

3. Manual Mode allows control via:
A) Smartphone app
B) Onboard buttons
C) Voice commands
D) Radio link
✅ **Answer:**

4. In Record & Replay Mode, you must first:
A) Upload code
B) Move the robot manually
C) Change battery
D) Connect to WiFi
✅ **Answer:**

5. Bluetooth Mode on Pedro uses which module?
A) ESP8266
B) HC-05
C) NRF24L01
D) GPS
✅ **Answer:**

6. Radio Mode enables communication between _____ robots.
A) Two
B) One
C) Three
D) Four
✅ **Answer:**

7. USB Serial Mode uses the port to _____.
A) Print 3D parts
B) Upload code or send commands
C) Charge the battery
D) None of the above
✅ **Answer:**

8. The slide switch for communication modes is labeled _____.
A) POWER
B) NRF → BT → WiFi
C) MODE
D) COMM
✅ **Answer:**

9. The Code key in Radio Mode ranges from _____.
A) 0-9
B) 1-99
C) 100-999
D) 0-255
✅ **Answer:**

10. What module enables WiFi on Pedro?
A) HC-05
B) NRF24L01
C) ESP8266-01
D) MPU6050
✅ **Answer:**

11. The ATmega32u4 allows programming via which IDE?
A) Eclipse
B) Arduino IDE
C) Visual Basic
D) MATLAB
✅ **Answer:**

12. What is the purpose of the RX/TX pins?
A) Power servos
B) Serial communication
C) Download STL files
D) Print 3D parts
✅ **Answer:**

13. « No tools required » means the kit is _____.
A) Pre-assembled
B) Tool-free assembly
C) Only screws
D) Requires soldering
✅ **Answer:**

14. The primary learning domain for these modes is _____.
A) History
B) STEM
C) Art
D) Geography
✅ **Answer:**

15. « Hands-on STEM learning » promotes _____.
A) Watching videos
B) Building and experimenting
C) Reading books only
D) Using simulators
✅ **Answer:**

16. Open-source hardware allows students to _____.
A) Disassemble parts only
B) View, modify and share designs
C) Keep designs proprietary
D) Use closed software
✅ **Answer:**

17. Which mode is best for directly recording manual movements?
A) Manual Mode
B) Record & Replay Mode
C) Bluetooth Mode
D) USB Serial Mode
✅ **Answer:**

18. Pedro's 3D missing parts can be found on _____.
A) Facebook
B) GitHub
C) Instagram
D) Pinterest
✅ **Answer:**

19. The educational value of Multiple Modes is to show _____.
A) Only one type of control
B) Diverse control interfaces
C) Just electronics
D) Only mechanics
✅ **Answer:**

20. In Radio Mode, both robots must use the same _____.
A) Battery level
B) Serial port
C) Code Key
D) USB cable
✅ **Answer:**

END
Pedro STEM Lesson n°2