Serial Adaptor with Breakout

Author: Alan Hunt, Date: 2026-03-11, License: CERN OHL v2 Permissive

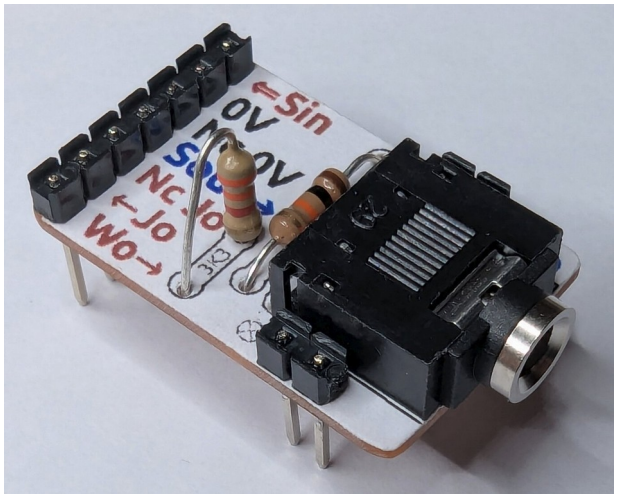

This is my preferred breadboard adaptor for PICAXE serial connections.

The adaptor provides a rock solid interface to match the stiff AXE027 download cable. Rigidity is achieved by using additional connections at the front on either side, so it can't twist or float up and down like the AXE029 breadboard adaptor.

The adaptor provides full breakout of the serial connector with its switched contacts. There are 2 uses I've had for this, to detect if a serial cable is inserted; or to provide a second connection to Serial_In. The second connection, Wo, can be a wireless transceiver's 3.3V receive output that operates correctly with the PICAXE on a 5V supply. When a local serial cable is inserted, Wo is automatically disconnected.

The labelling on top of the board makes it easier to understand and remember connections. On 8, 14 and 20 pin PICAXEs the "⇐Sin" connects near positive supply and the "Sout➔" connects near the 0V.

All files for this project are on GitHub here.

Contents

This file provides a summary of the:

- Design
- Tools and Materials List
- Assembly Instructions
- Photos
- Printout for Paper Labels

Design

Reference Information

The PICAXE programming/debug cable is usually presented as a 3.5mm male audio TRS jack with the Tip as 0V, Ring for PICAXE Serial_In (PC Transmit), and Sleeve for PICAXE Serial_Out (PC Receive).

The pinout of the serial connector socket is shown below (pin numbers vary between manufacturers):

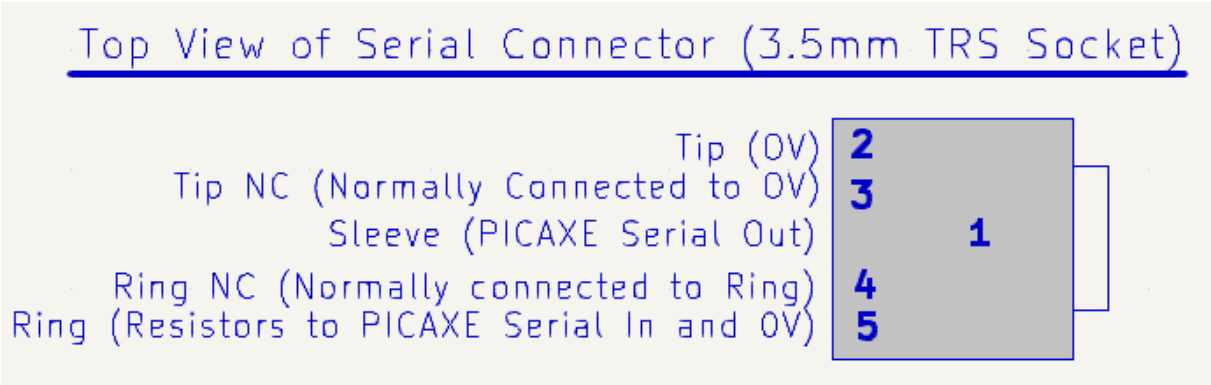

Circuit Diagram

Shown below is the adaptor's circuit diagram with my preferred resistor values:

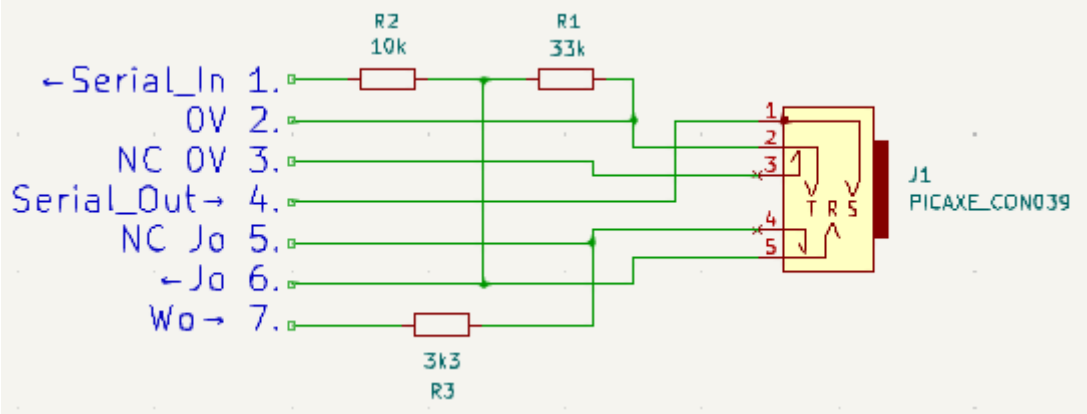

Resistor Value Choices

If you want to follow PICAXE convention you can swap R1 and R2 in the circuit diagram above. These would be replaced with 10kΩ and 22kΩ respectively, and R3 would be removed. If you want to support RS232 +/-15V inputs, R2 should be 22kΩ.

My preference is to support the potential use of Wo as an alternate path to Serial_In, just in case it's needed. This needs some consideration because R3 and R1 form a potential divider, so R3 needs to be relatively small to retain most of the Wo voltage as seen at R2 and Serial_In.

As a serial connector is inserted, the tip of plug may briefly connect Wo to 0V. So, if the Wo output is logic high, it needs to be able to support that brief load, which is reduced by higher values of R3.

In my experience, the PICAXE Serial_In can be pulled low with a resistance of 100kΩ, so setting R1 as 33kΩ instead of 10kΩ seems safe and reduces some current drain on the serial plug. It also allows R3 to be higher, such as 3.3kΩ, to achieve a good logic high voltage of 3V to Serial_In when Wo is 3.3V. If the AXE027 serial cable, or other 5V interface, is used then the maximum brief load on Wo could be 1.5mA. If an RS232 signal is used there's a chance of a brief -15V connection to Wo until the contact between pins 4 and 5 of the serial connector is broken. In this case the fleeting load would be 6mA. If your resistor kit doesn't have 33kΩ and 3.3kΩ values, which seems common these days, you could use 47kΩ and 4.7kΩ instead.

The purpose of R2 is to act as a current limiter to protect the PICAXE from over/under voltage. If only using the AXE027 or TTL level interfaces, it's safe to drop this to 10kΩ as I did. On reflection, I probably should have stuck with the normal 22kΩ value for RS232 compatibility. In this case the pull-down resistance on Serial_In would be raised to 55kΩ, compared to 43kΩ in the design shown and 32kΩ in the standard circuit.

In testing, if the Wo input was above 1.3V it would register as logic high on Serial_In, initiating a reset/download, even if the PICAXE was operating at 5V.

Board Layout and Labelling

There are two board layouts shown below, the top one is preferred “woo” board. The other is based on the standard download circuit. If you’re having a bad day the Wo board will rapidly become a “woe” board though!

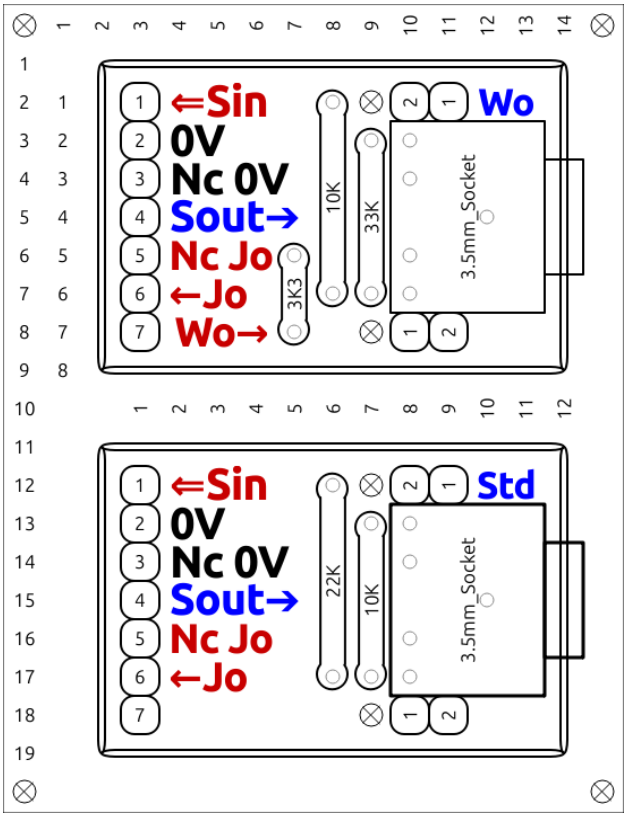

Key to diagram:

- “⇐Sin” connects to the PICAXE Serial_In pin.
- “Sout➔” connects from the PICAXE Serial_Out pin.
- “NC” stands for “Normally Connected to”, these connections are broken when a plug is inserted.
- “Jo” stands for “Jack Out”, which is the raw output of the serial plug without pull-down and protection resistors.
- “Wo” stands for a receive “Wireless Output”, which is a key use case where a signal is normally connected to “⇐Sin” via resistors and broken when a plug is inserted.

Circuit Board

The circuit board was designed in VeroRoute v2.39 and it provided .png images for this document.

The circuit boards are 1.2” by 0.8” stripboard and the copper tracks are colourised in the diagram below:

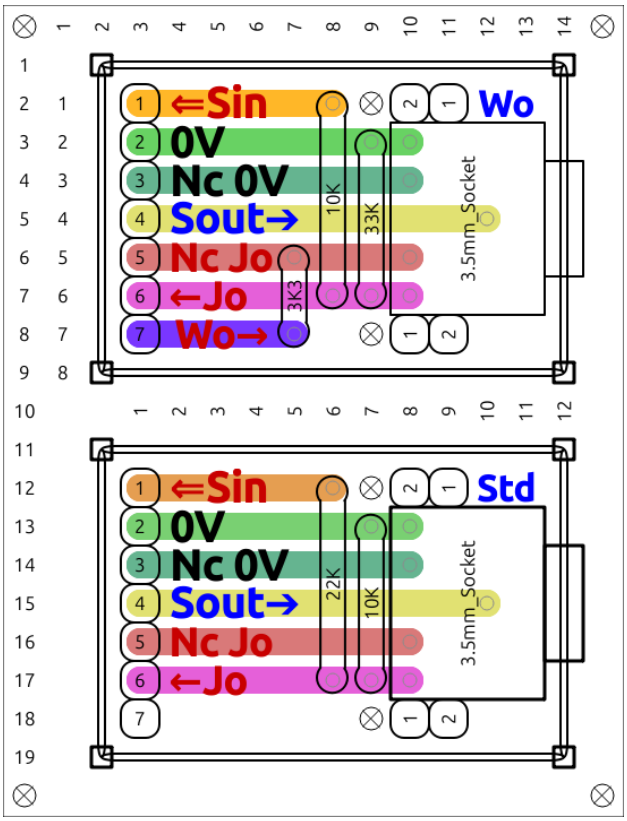

Checking for a Serial Cable Connection

If you wish to check whether a serial data cable is plugged in, you can check the logic level of pin 3 of the adaptor after you provide a pull-up on that pin. The pull-up could be a 10KΩ resistor to +V, or the PICAXE “pullup” command.

Usage

Even though the adaptor is rock solid, due to the stiffness of the AXE027 cable, I still prefer having the AXE027 jack permanently at the back of my desk and connect to breadboards via a flexible 1M extension cable.

Tools and Materials

Here’s what you’ll need:

1. A Laser printer, ordinary paper and scissors for the labelling. Sorry it’s a laser, it’s so the ink doesn’t run (a laser’s ink is actually plastic).
2. Clear Matt Varnish or Acrylic Medium. Either can be used to bond printed paper to the top of the stripboard, making a silkscreen effect, and to

provide protection to the paper. Varnish will be a little tougher and more resistant to grubbiness or liquid, so that's assumed in the instructions.

3. A plastic kitchen scouring pad.
4. A small soft paint bush.
5. A push pin, as used for pinboards.
6. Soldering equipment, small wire cutters and pliers.
7. Preferably, a 1.0 mm drill to enlarge some holes for the serial connector pins and feet.
8. Tools to cut, smooth and notch the stripboard. A vice and small file are recommended and a vacuum is essential.
9. Sufficient stripboard and components for the number of adaptors you intend to make. It's more efficient to make the adaptors in batches, so I recommend making a lifetime's worth in one go.
10. Per adaptor:
    1. 1.2" by 0.8" stripboard.
    2. 11 pins of 0.1" pin headers.
    3. Resistors: 33KΩ, 20KΩ & 3.3KΩ (Carbon Film 0.25W were used).
    4. Serial connector, either the PICAXE CON039, or its equivalent available from many suppliers, also known as a PJ-307, or SJ1-3525N etc.

Assembly Instructions

1. Print the last page of this document, which contains multiple images that emulate two types of a top-side silkscreen. There's my preferred layout that allows the secondary Serial_In connection, Wo; and there's the standard PICAXE download circuit too. The image size should be OK if you're printing on A4 without scaling, if not make each image 4.06 cm by 5.32 cm.
2. Use scissors to cut the images and use one of these to help size the stripboard for cutting too. Note, you get a better finish by cutting the outside lines of each image and trimming excess paper to the edge of the board later. Alternatively, you could cut the paper smaller than the board, which allows you to glue and top-coat at the same time.
3. The scouring pad can be used dry to remove any manufacturing residue on the stripboard and to rough up the top-side for good adhesion.
4. Cut the stripboard. My preferred technique is to place the stripboard in a vice and snap along the holes just above the jaws. The cut lines are the

next row of holes outside of the intended board size. Alternatively, I've snipped or sawed boards in the past but snipping splinters brittle boards and sawing is slow.

5. Being very careful to not breath the dust, a small file is used to reduce each side by 0.05" and make it smooth. Corners should have a tiny amount of rounding. A needle file is needed to make a slot at the top of the board due to the bulbous underside of the serial connector. File the slot until the connector easily sits flush on the board. After filing be sure to vacuum the work area.
6. Using a push pin, make holes in the paper where the centre pin of the connector will be and also where the 3.3k resistor locates to near "Nc Jo". The first hole helps to carry and locate the paper to the stripboard, the second hole gives a visible indication of when the paper is aligned correctly when gluing.
7. With the brush, coat the top of the board with varnish to act as glue for the paper. Once aligned press down all the paper to the board.
8. After the varnish as dried use a file or sharp craft knife to trim the paper to the edges of the board.
9. To make sure the paper stays looking clean I put another coat of varnish around the edge of the board and on top of the paper. You need something to sit the board on and I used some anti static foam cut to size. While painting I held the board with a push pin where the connector will sit.
10. After the varnish has dried use a push pin to make holes where all the components will go. The connector also needs 5 extra holes where its plastic locating feet are placed. If you have a Dremel it's preferable to have 1mm holes drilled for all the connector pins and feet. Without drilling these holes it's difficult, but not impossible, to locate the connector on the board due to the size of its pins.
11. The 0.1" male headers are snapped to size and the pins are pushed down with pliers so that the pins are flush with one side of the plastic.
12. When soldering I found it easiest to tackle it in 3 phases:
    1. Mount the 2 resistors closest to the serial connector along with the 0.1" headers. If you have a crocodile holding grip, use this where the connector will be and then solder up. The board is quite small and light so it'll move around if it's not held.
    2. Mount the serial connector and use a crocodile grip to hold the header pins while soldering that. The connector will need to forcefully nudge the adjacent resistor a little.
    3. Finally, solder the vertically mounted 3.3k resistor.

Photos

PICAXE Serial Cable AXE027
(Very robust/stiff)

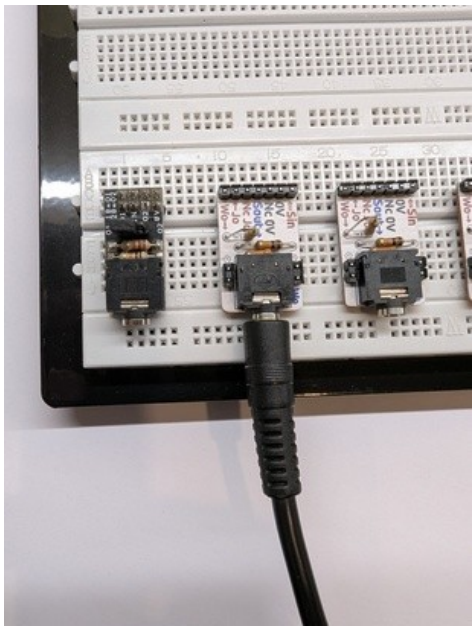

PICAXE Breadboard Adapter AXE029
(No front support)

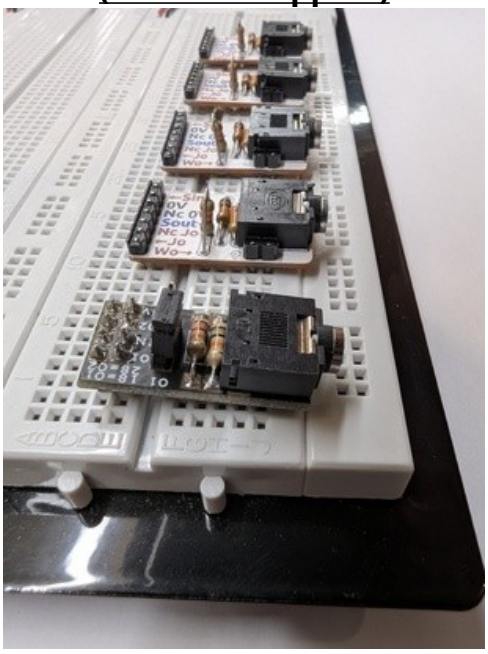

Had Used This

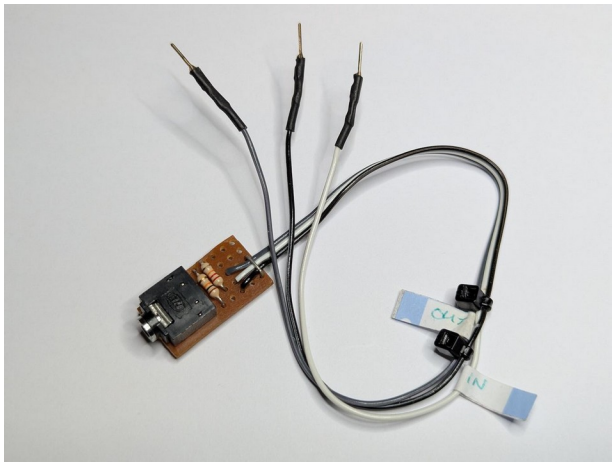

Evolved to This

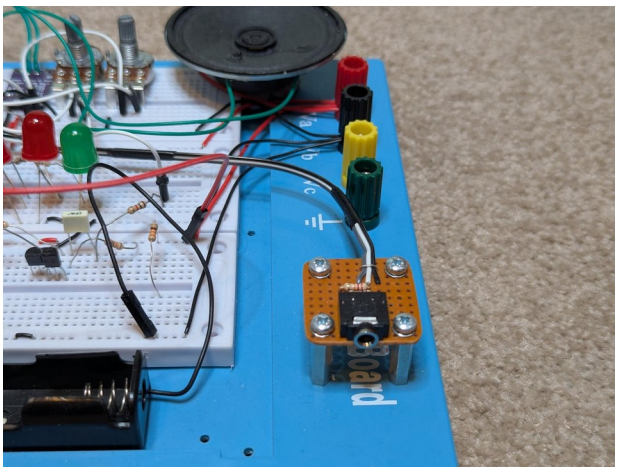

Snapping and Filing Board to Size

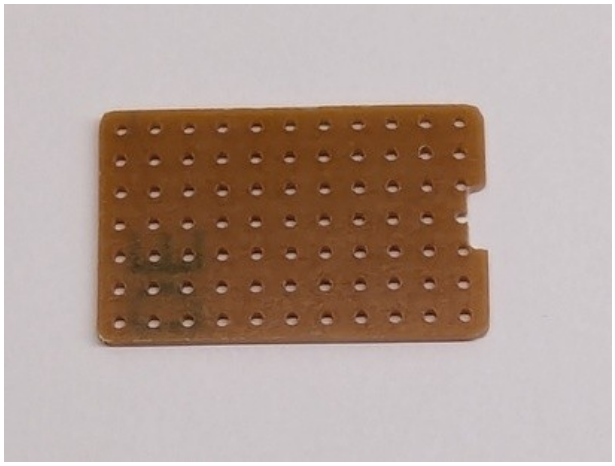

Making sure Connector Lays Flat

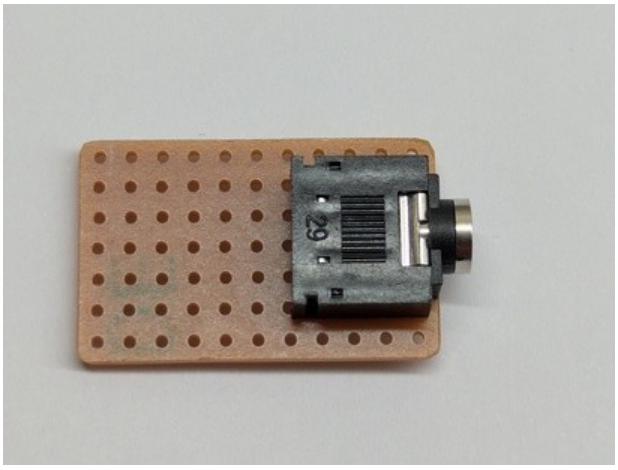

Aligning Paper

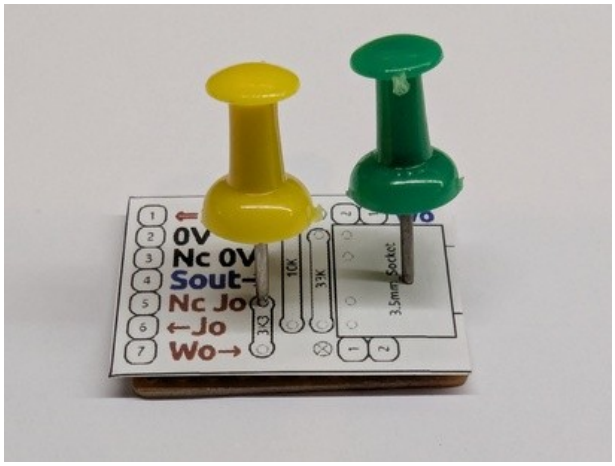

Gluing

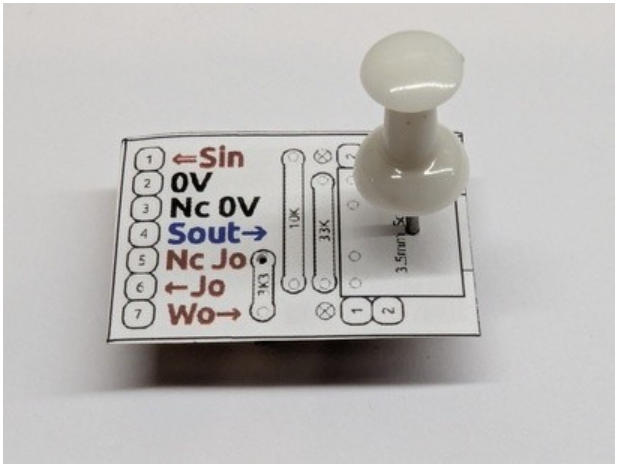

Drying (Sitting on Anti-Static Foam)

Left: Overlapped and nicely trimmed later
Right: Smaller paper, 1 stage glue and top coat.

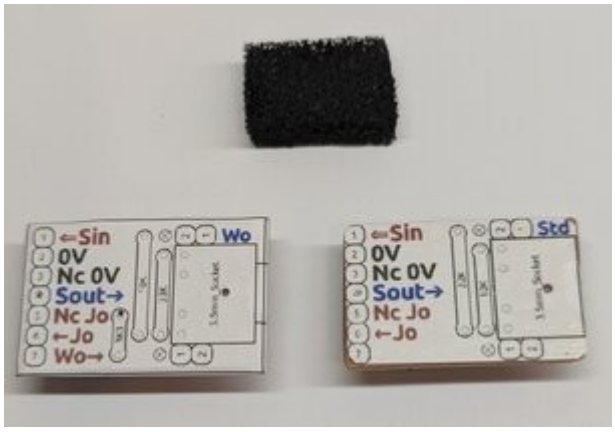

Excess Paper Filed Off then Top Coated

Pin Holes & Connector Drilled Holes

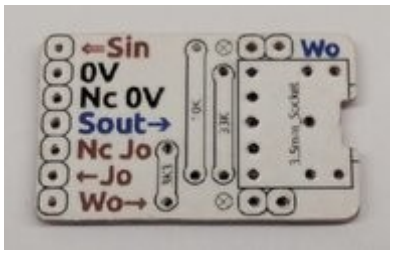

Headers Modified

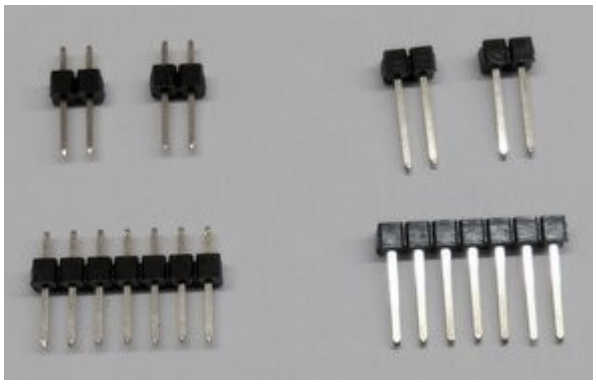

Adaptor with Labelling & Breakout

Underside

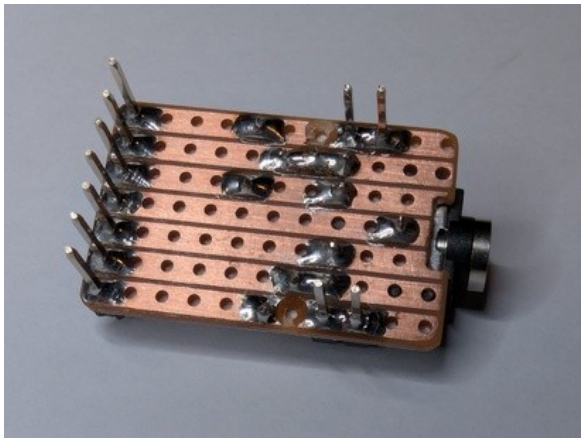

I'm Still Using a Flexible Cable Extension to the Back of My Desk

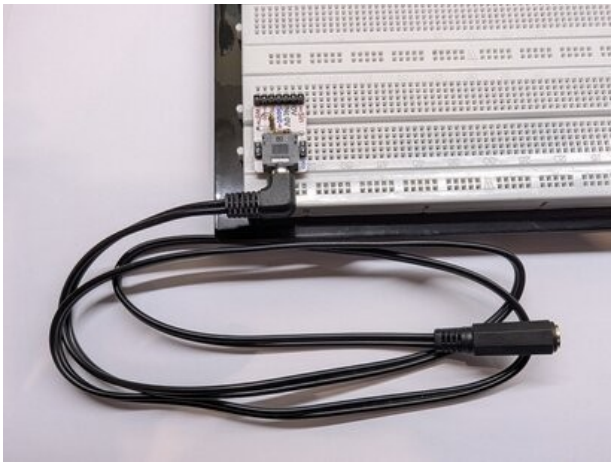

Paper Labels

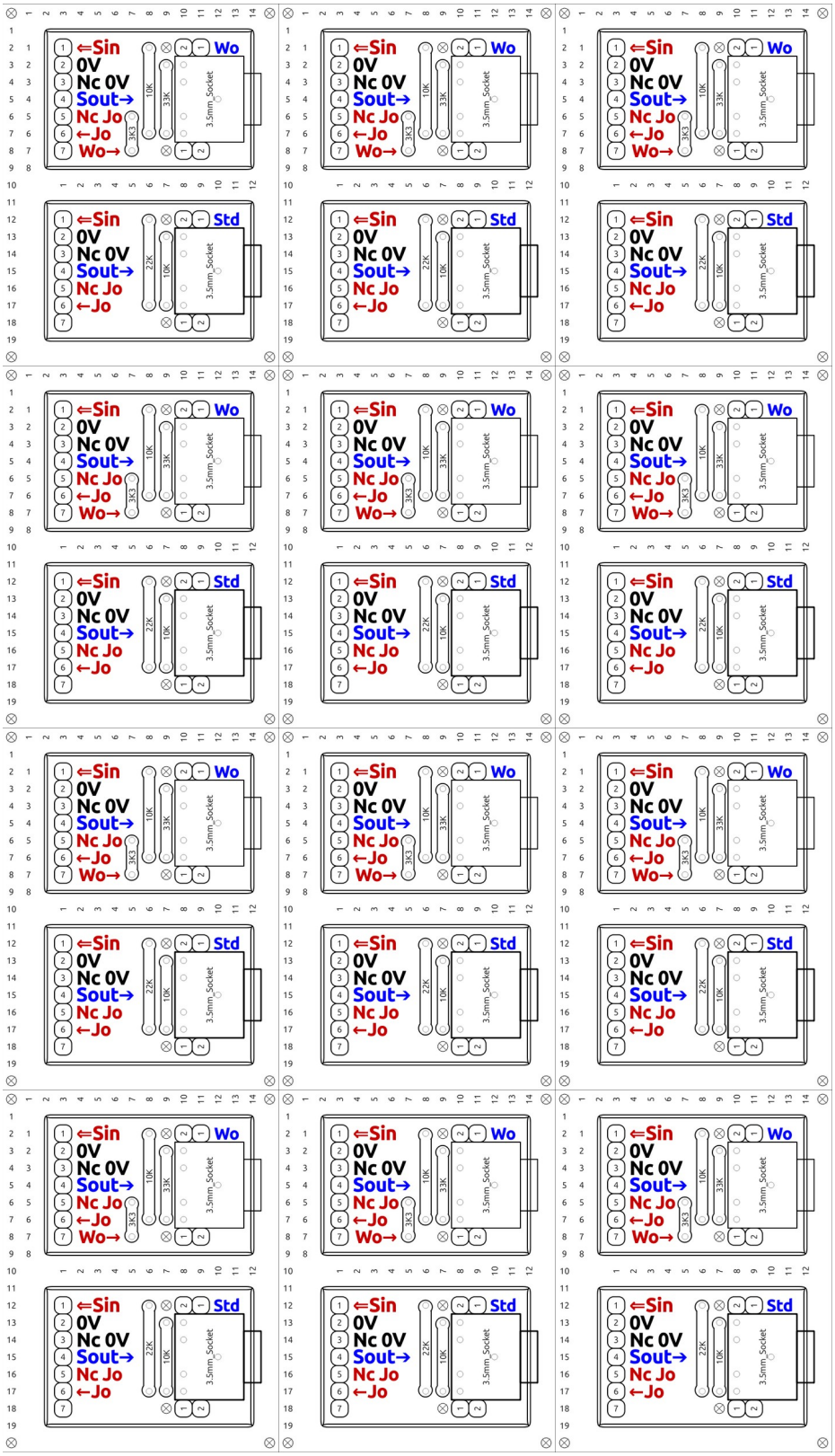

<End of Document>