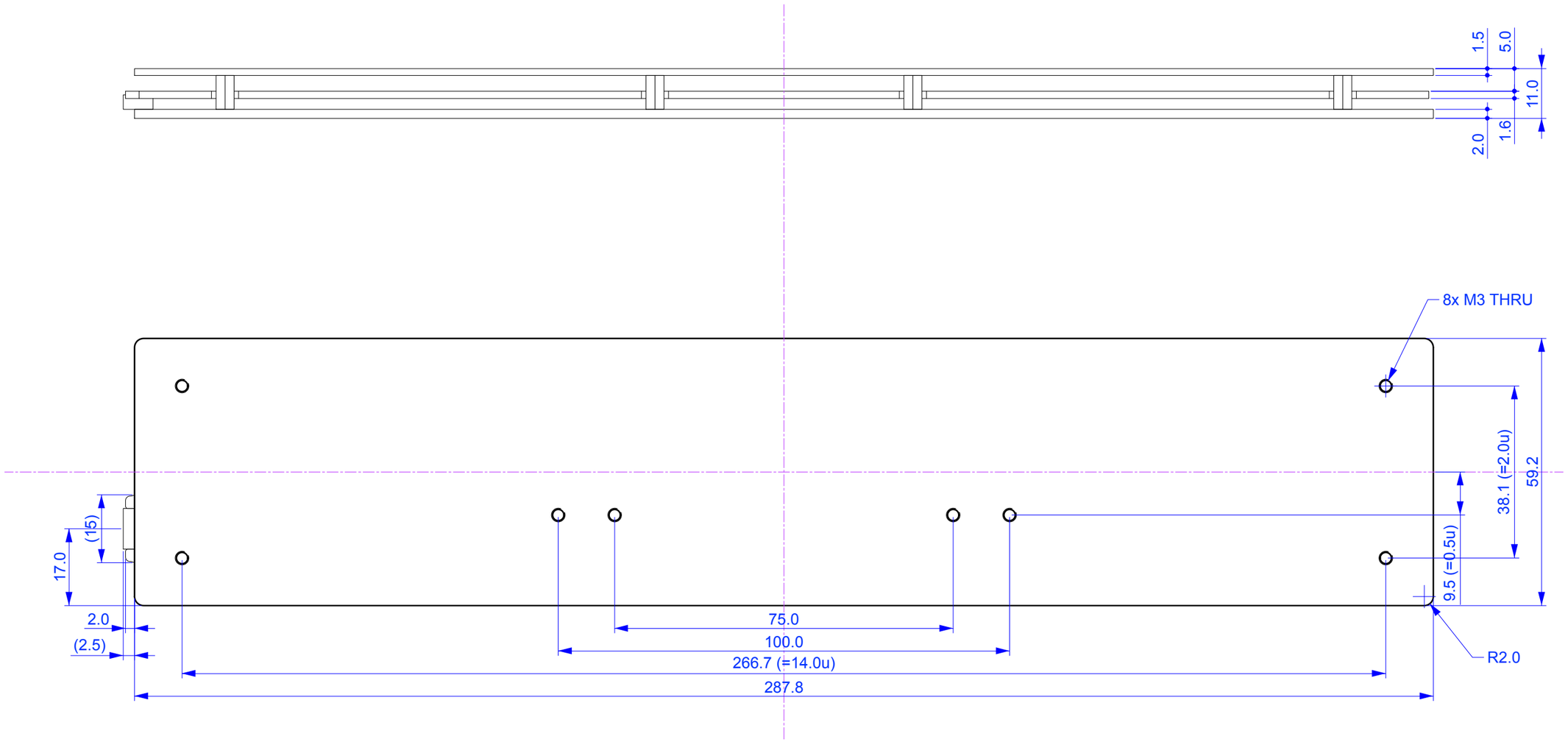

REVISIONS

TITLE

SOLOVAN

DESIGNER	FIRST ISSUED	REV.
ALP DESIGNS	2021-12-27	A

PROJECTION	SCALE	DWG NO.	SHEET
	1:1	1	1/1

ALL DIMENSIONS ARE IN MILLIMETRES

ALP DESIGNS