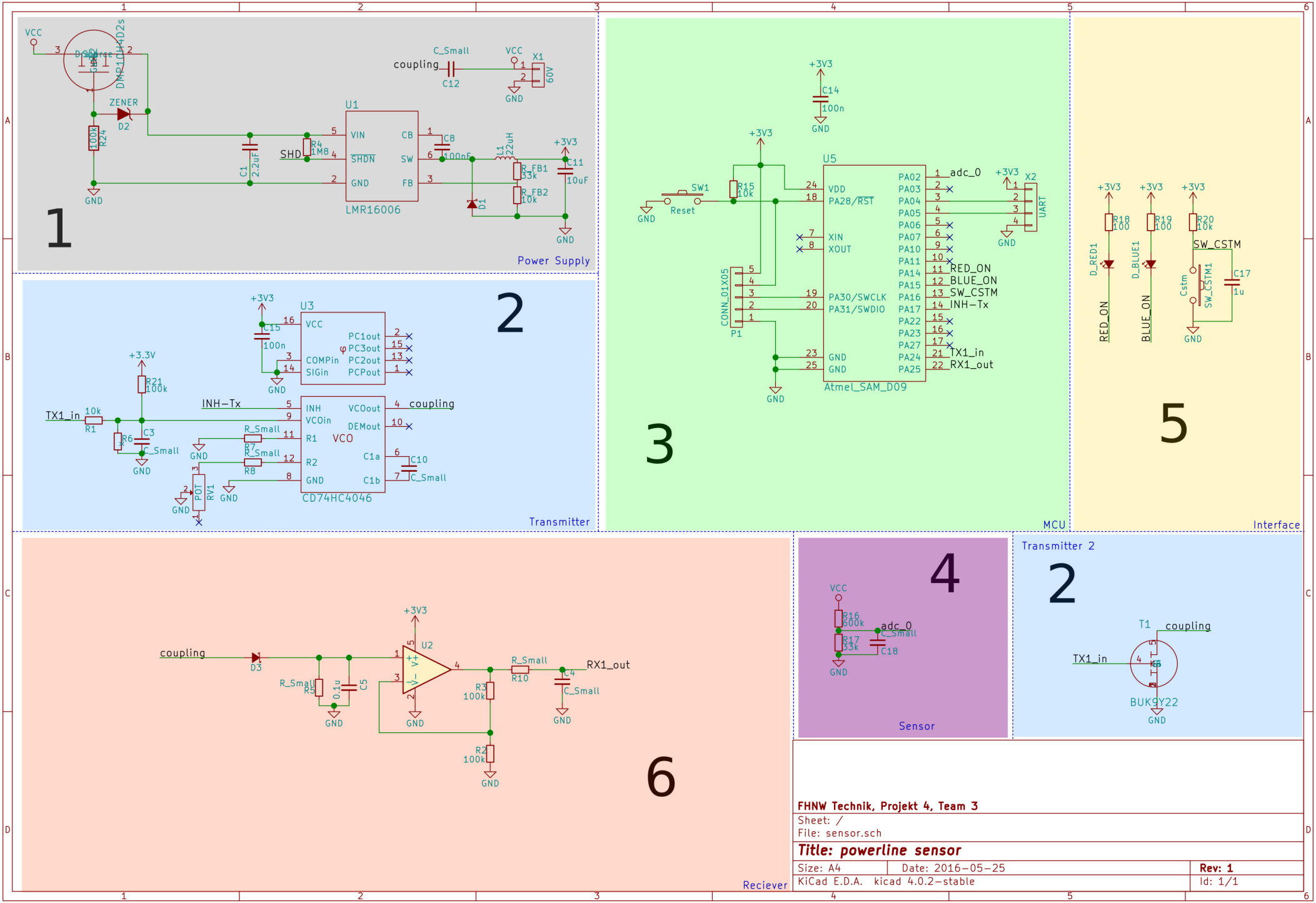
1
Power Supply
VCC
DMN21CH4D2s
ZENER
D2
R24
100k
GND
C1
2.2uF
SHD
R4
1M8
U1
VIN
SHDN
GND
CB
SW
FB
LMR16006
C8
100nF
L1
22uH
D1
R_FB1
33k
R_FB2
10k
+3V3
C11
10uF
C_Small
coupling
C12
X1
60V
2
Transmitter
+3V3
U3
VCC
COMPin
SIGin
PC1out
PC3out
PC2out
PCPout
C15
100n
+3.3V
R21
100k
TX1_in
R1
10k
R6
C3
C_Small
INH-Tx
INH
VCOin
R1
R2
GND
VCOout
DEMout
C1a
C1b
VCO
CD74HC4046
R_Small
R7
R8
POT
RV1
C10
C_Small
coupling
3
MCU
+3V3
C14
100n
GND
U5
VDD
PA28/RST
XIN
XOUT
PA30/SWCLK
PA31/SWDIO
GND
Atmel_SAM_D09
SW1
Reset
R15
10k
CONN_01X05
P1
PA02
PA03
PA04
PA05
PA06
PA07
PA10
PA11
PA14
PA15
PA16
PA17
PA22
PA23
PA27
PA24
PA25
adc_0
RED_ON
BLUE_ON
SW_CSTM
INH-Tx
TX1_in
RX1_out
X2
UART
5
Interface
R18
100
R19
100
R20
10k
D_RED1
D_BLUE1
RED_ON
BLUE_ON
SW_CSTM
Cstm
SW_CSTM1
C17
1u
6
Reciever
coupling
D3
R_Small
R5
0.1u
C5
U2
+3V3
R_Small
R10
RX1_out
C4
C_Small
R3
100k
R2
100k
4
Sensor
VCC
R16
600k
R17
33k
adc_0
C_Small
C18
Transmitter 2
2
T1
coupling
TX1_in
BUK9Y22
FHNW Technik, Projekt 4, Team 3
Sheet: /
File: sensor.sch
Title: powerline sensor
Size: A4
Date: 2016-05-25
Rev: 1
KiCad E.D.A. kicad 4.0.2-stable
Id: 1/1