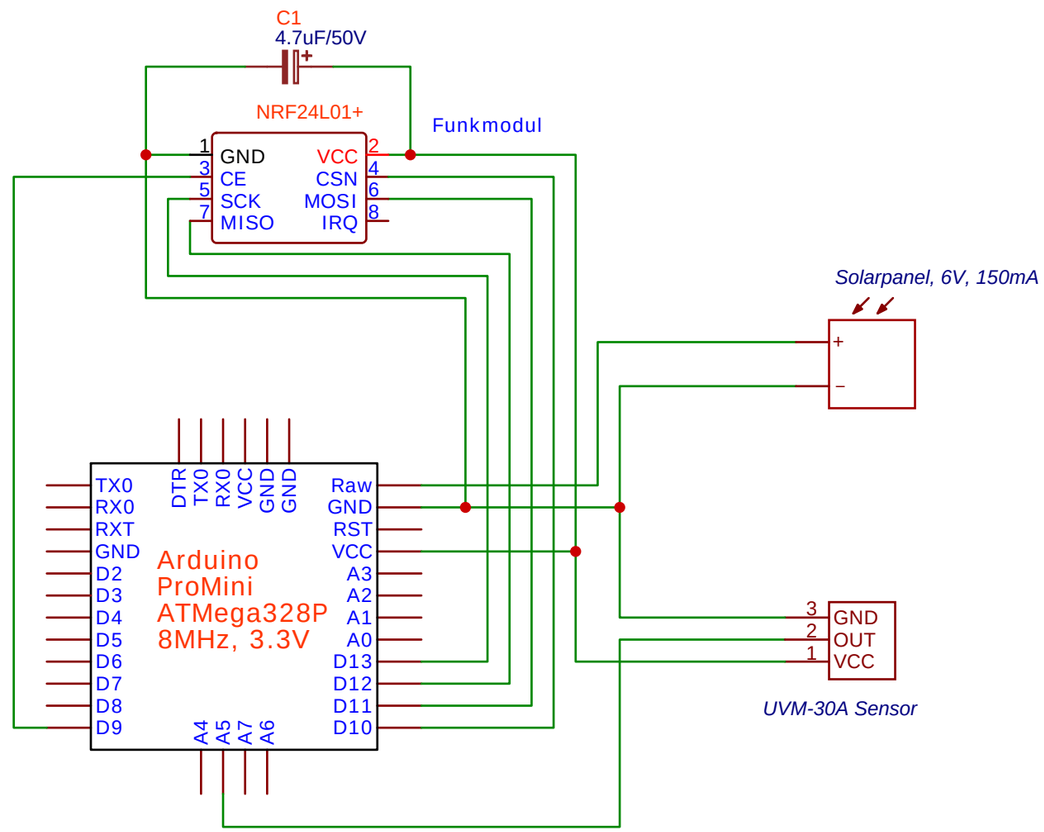

TITLE: UVsensor (UVM-30A, Solarbetrieb)		REV: 2.1
	Company: Private	Sheet: 1/1
	Date: 2021-05-05 Drawn By: Stefan Burkhardt	