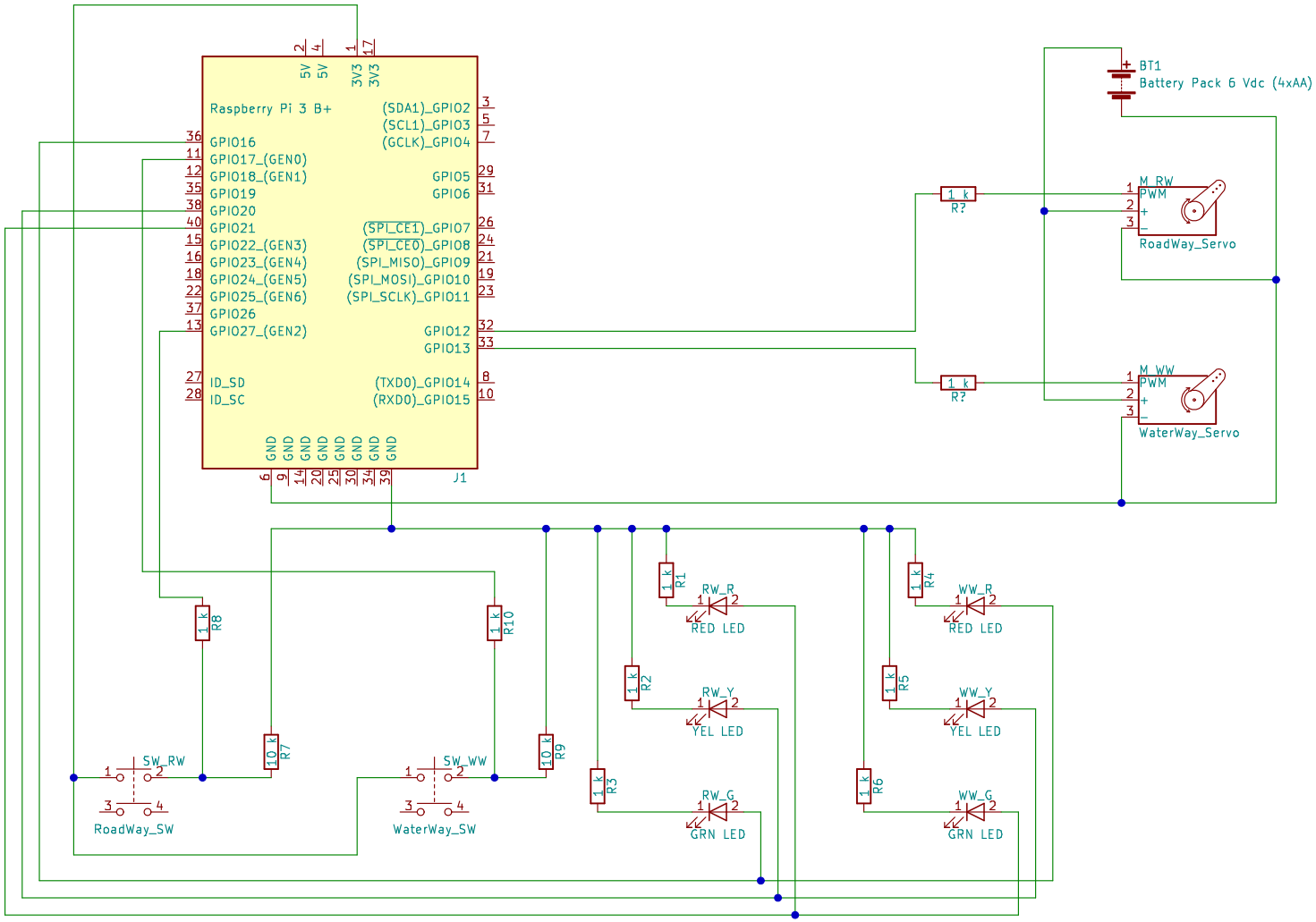

BSidesAugusta STEM

Sheet: /

File: BSidesAugustaSTEM_RPi_DrawBridge.sch

Title: Rasperry Pi Draw Bridge

Size: USLetter	Date: 2017-04-09	**Rev: 1**
KiCad E.D.A. kicad 4.0.6-e0-634952ubuntu16.10.1		Id: 1/1