Clock Domain Crossing

Part 4

Amr Adel Mohammady

/amradelm

Save The Palestinian Children

Till Nov,2023

Israel has killed more than 13,000 children in Gaza since October 7 while others are suffering from severe malnutrition and do not “even have the energy to cry”, says the United Nations Children’s Fund (UNICEF).

“Thousands more have been injured or we can’t even determine where they are. They may be stuck under rubble … **We haven’t seen that rate of death among children in almost any other conflict in the world**”

-**UNICEF** Executive Director

Introduction

- In the previous parts we saw how to send single bit across different clock domains.
- We also saw how to handle data duplication using pulse and edge synchronizers
- **Our CDC concerns till now:**
  - Data corruption: Partially fixed. The system, till now, can only send 1-bit data. Also, this data has a varying arrival time.
  - Data incoherence: Fixed. The metastable value settles within the synchronizers at 0 or 1 and then propagates to all the domain 2 blocks with the same settled value
  - Data loss: Fixed. The pulse is wide enough that it won't be missed by domain 2
  - Data duplication: Fixed. sIf we use pulse/edge synchronizers
  - Chip burning: Fixed. We limited the metastability propagation between the synchronizers and reduced its occurrence frequency.
- In this part we will see how to send multi-bit signal using gray coding

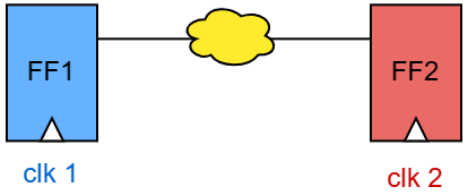

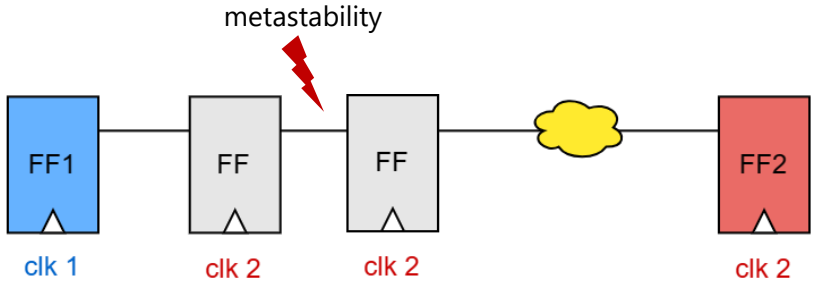

Reconvergence Issue

Multi Signal Reconvergence in the Receiving Domain

- When multiple signals are passed from the sending domain and then converge in the receiving domain, as shown in the diagram, we may get functional errors due to the difference in the settling time between the two signals.
- **Consider the example on the right:** Domain 1 sends a 2-bit control signal to domain 2.
  Initially we are in IDLE=2'b00

1. Domain 1 sends "2'b11 (WRITE)" to domain 2. The change occurs close to the edge of clk2 causing a metastability.
2. Signals a2 and b2 leave metastability and settle at different values "2'b10" (READ).
3. The value "2'b10" (READ) is passed to a3 and b3 and then to the combinational logic causing it to go to a (READ) state while the intended state was (WRITE).
4. The logic receives the correct value (WRITE) later but the damage is already done.

- This example shows the problem with sending multiple signals from one domain to another even with just 2 bits.
- **How to solve:**
  - Converge these signals in the sending domain then send them as one signal to the receiving domain. However, this is not always possible.
  - Use gray encoding to make sure only one signal changes at a time
  - Use MUX synchronization scheme to pass these signals as a group (Will be discussed later)

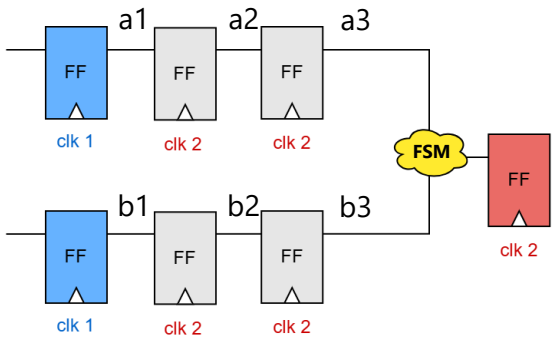

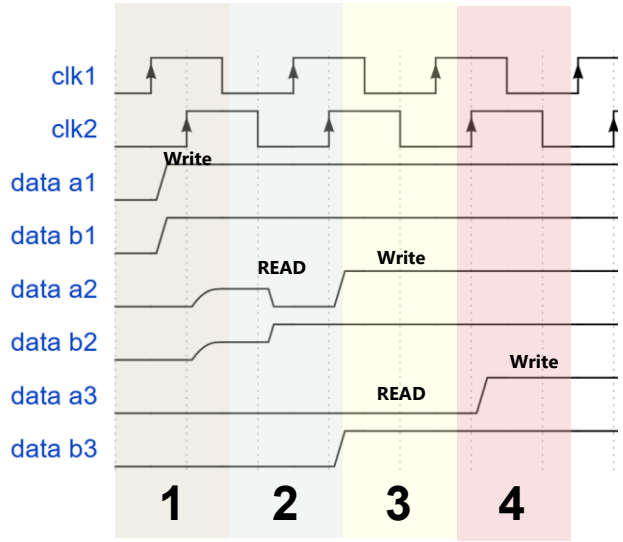

Gray Coding

Gray Coding

- In the previous example we saw how sending multi signals across clock domains can be problematic.
- If we can ensure only one bit changes at a time we can solve the issue because we will either get the current value or the new value.
- **Lets see an example to understand:** As the previous example, we want to send a control signal from domain 1 to domain 2. The only difference is we will change the bit assignments. The diagram below shows the possible state transitions. Initially we are in IDLE=2'b11

1. Domain 1 sends "2'b01 (WRITE)" to domain 2. The change occurs close to the edge of clk2 causing a metastability. This time, only signals b1 changed while a1 remained stable hence a2 <u>won't</u> go metastable
2. Signals b2 leave metastability and settle at wrong value "1'b1".
3. The value "2'b11" (IDLE) is passed to a3 and b3 and then to the combinational logic. The logic still sees (IDLE) so nothing changes in the system.
4. The logic receives the correct value "2'b01" (WRITE) later and the system enters the correct state.

- Because we ensured only 1 bit changes at a time, domain 2 will either see the old value (IDLE) or the new value (WRITE). It won't erroneously enter the (READ) state.

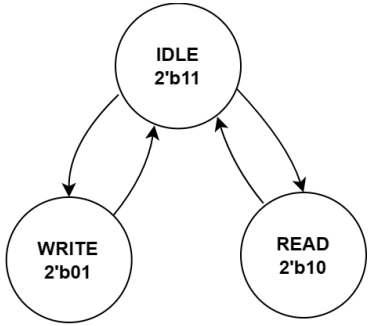

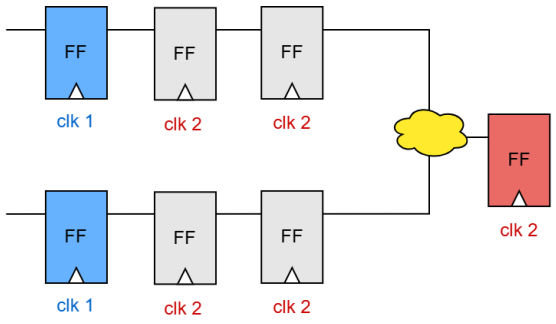

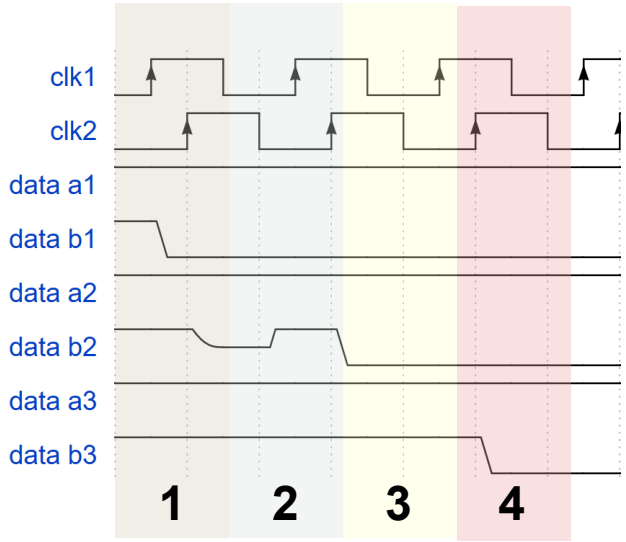

Gray Coding

- Gray code is a binary numbering system where every two **adjacent** values differ only in one bit.
- These codes are widely used with CDC to avoid functional errors and ensure the receiving domain either get the old value or the new value and not any other illegal value as we saw in the previous example.
- **One of the main uses of gray codes is passing counter values from one domain to another. This will come in handy soon.**
  1. The sending domain has a normal binary counter. The counter output goes to a binary to gray encoder.
  2. The output is then sent to FFs to protect the synchronizers from combinational glitches.
  3. The encoded values pass through the synchronizer then to the gray to binary decoder.
  4. Because only one bit changes we ensure the receiving domain will either receive the old count or the new count.

Decimal	Binary Code	Gray Code
0	0000	0000
1	0001	0001
2	0010	0011
3	0011	0010
4	0100	0110
5	0101	0111
6	0110	0101
7	0111	0100
8	1000	1100
9	1001	1101
10	1010	1111

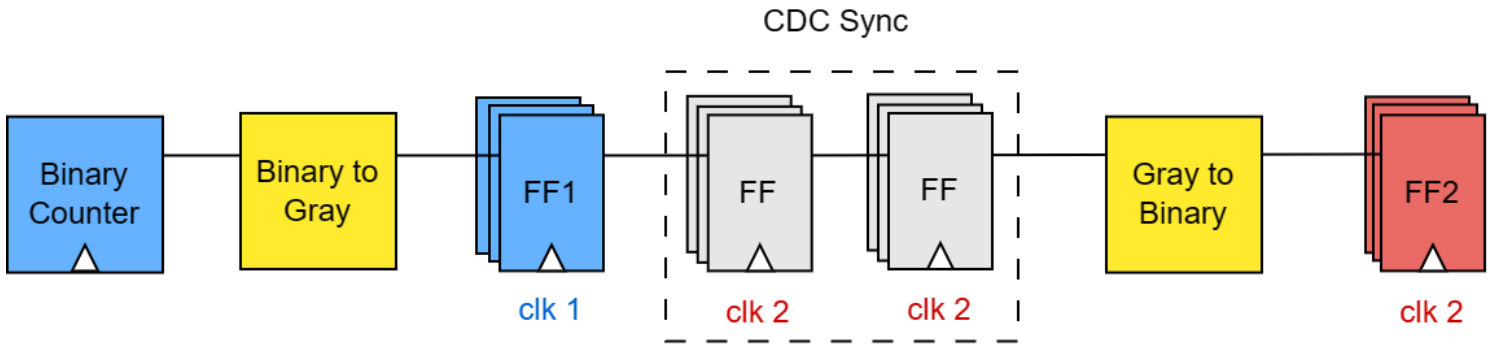

Passing Counter Values From one Domain to Another

Gray Coding

- Using gray codes we managed to send counter values, FSM states or any signal where the transitions are sequential and predictable.
- However, Gray codes can't be used to send data signals or any signal where the transitions are not sequential. For example, if we are sending decimal value such as "562" we have no idea what the next sent data will be and we have no ability to ensure the transition to the new value is done with one bit change.
- In the next part we will discuss how to send data signals or any multi-bit signal that can't be gray coded.

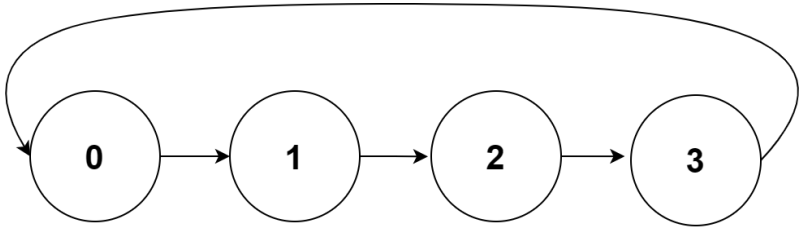

Counter FSM

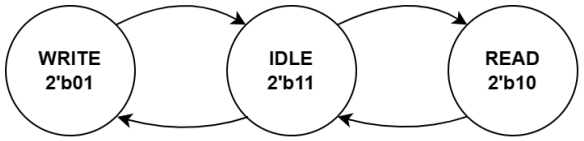

FSM That Can Be Gray Coded

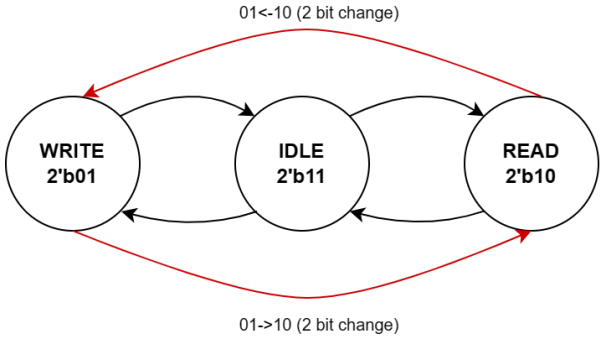

FSM That Can't Be Gray Coded

Thank You!