Clock Domain Crossing

Part 6 – CDC FIFO

Amr Adel Mohammady

/amradelm

Save The Palestinian Children

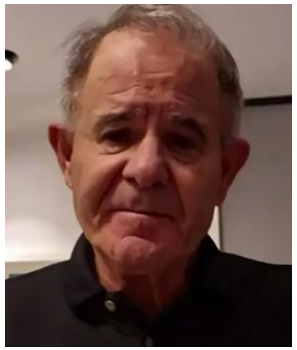

Rami Igra
Former Israeli Intelligence Official

"Children in Gaza over 4 deserve to be starved"

Bezalel Smotrich
Israeli Minister of Finance

"Might be 'justified and moral' to cause 2 million Gazans to die of hunger, but world won't let us"

Ben Gvir
Israeli Minister of National Security

"Executing The Palestinian prisoner 'right solution to overcrowding'"

Yoav Gallant
Israeli Minister of Defense

"There will be no electricity, no food, no fuel, everything is closed, We are fighting human animals"

Introduction

- In the previous parts we saw how to send multi-bit data signal using the mux synchronization scheme.
- Our issue with that scheme is that it's slow since it requires a handshake
- **Our CDC concerns till now:**
  - Data corruption: Partially fixed. The system can send multi-bit control signals and data but in a slow manner
  - Data incoherence: Fixed. The metastable value settles within the synchronizers at 0 or 1 and then propagates to all the domain 2 blocks with the same settled value
  - Data loss: Fixed. The pulse is wide enough that it won't be missed by domain 2
  - Data duplication: Fixed if we use pulse/edge synchronizers
  - Chip burning: Fixed. We limited the metastability propagation between the synchronizers and reduced its occurrence frequency.
- In this part we will see how to send multi-bit data signal using the CDC FIFO scheme

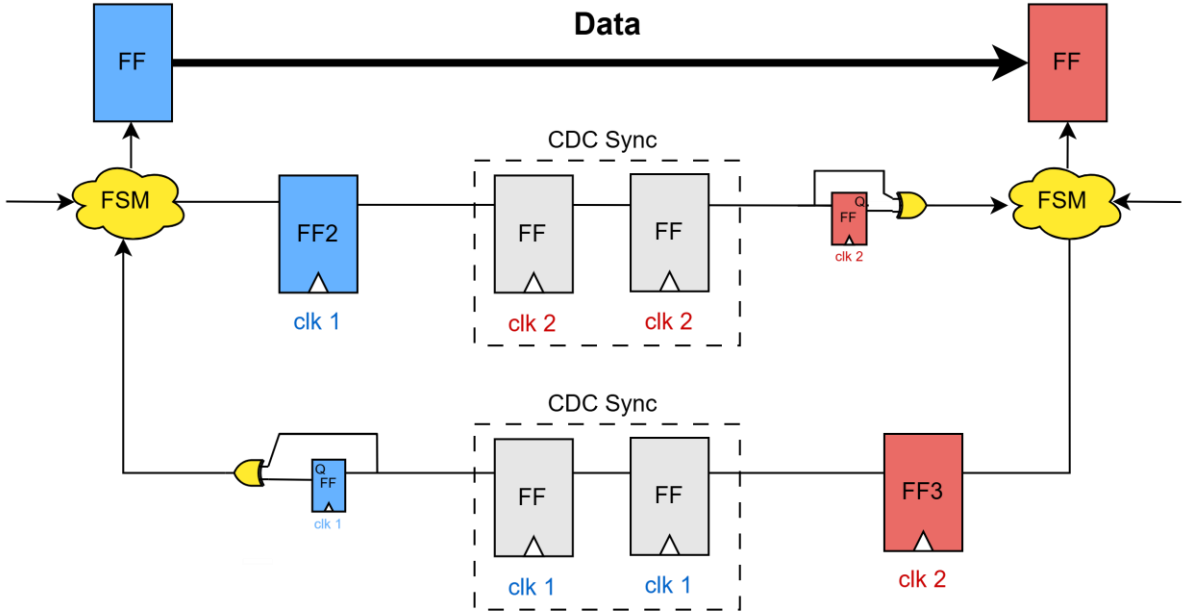

CDC Handshake Protocol

Introduction

- The asynchronous FIFO is perhaps the most common way to send data across clock domains.
- **The asynchronous FIFO consists of:**
  - A circular FIFO
  - Binary to Gray encoder and Gray to binary decoder.
  - Flip-Flop synchronizers
  - Comparators
- In the next slides we will talk about each part in detail.

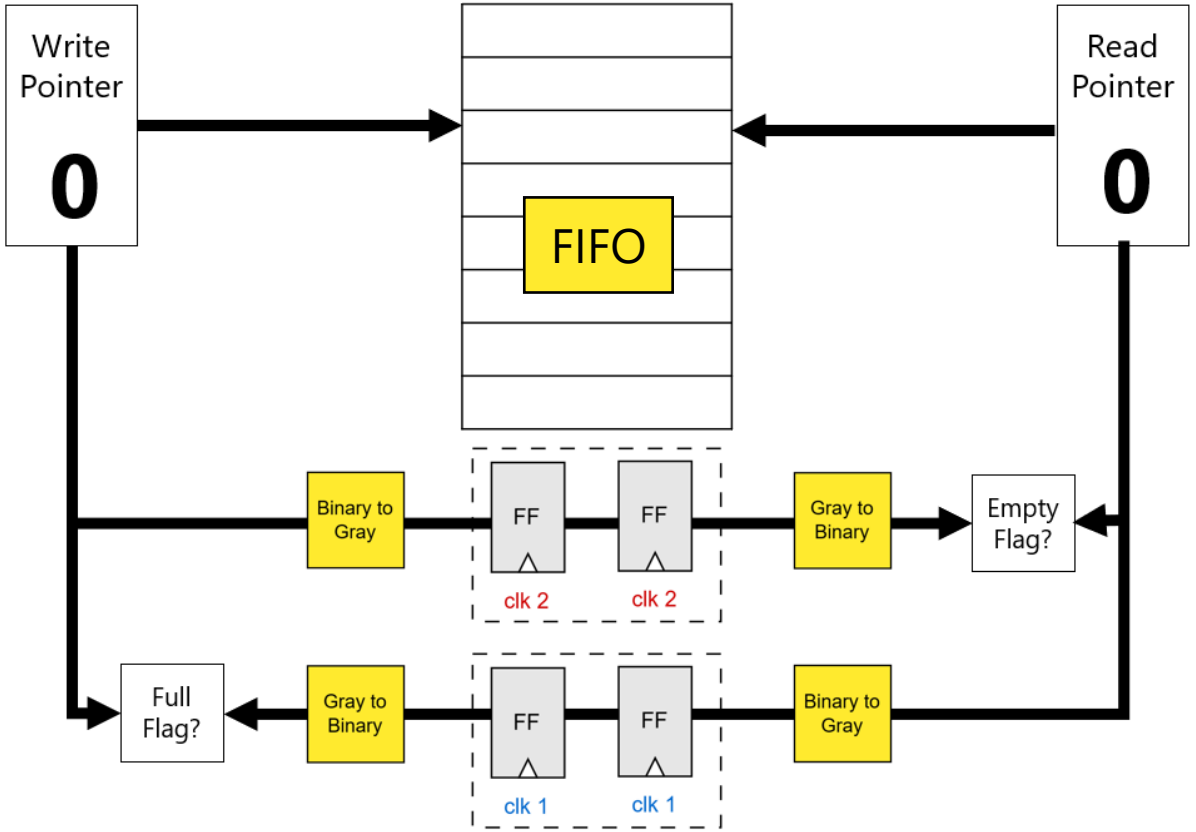

CDC FIFO

First-In First-Out Buffer

(FIFO)

FIFO Structure

- Circular FIFO is implemented using a fixed-size buffer (array) with two pointers: one for the read position (read pointer) and one for the write position (write pointer).
- When the write pointer reaches the end of the buffer, it wraps around to the beginning of the buffer, continuing to write data in a circular fashion. The same applies to the read pointer when reading data.
- Circular FIFO follows the First-In-First-Out principle, meaning that the first data written into the buffer is the first data read out.
- You can watch an animation of the FIFO operation here : https://lnkd.in/ezJMAtbG

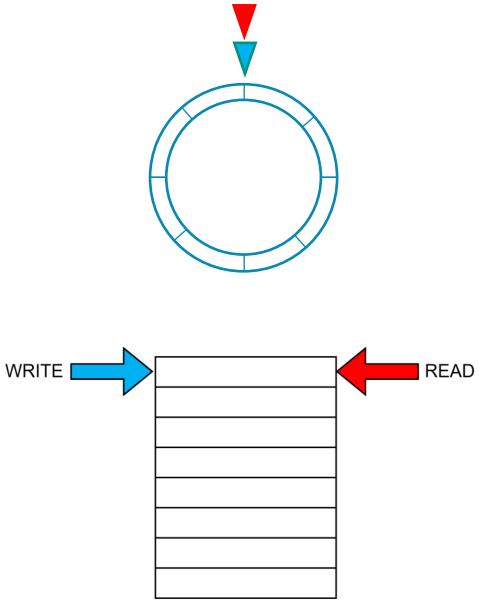

Empty FIFO

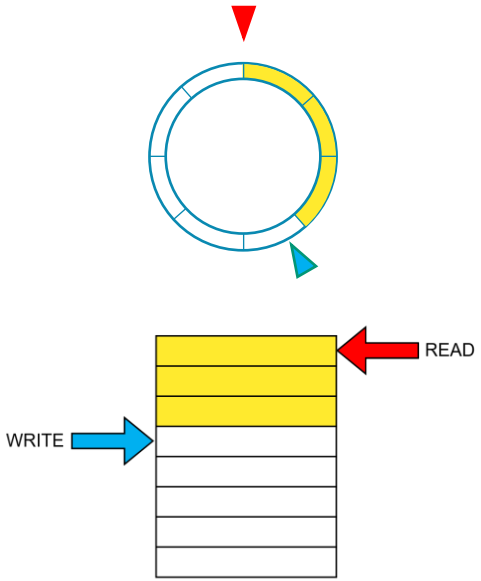

3 Entries Written
0 Entries Read

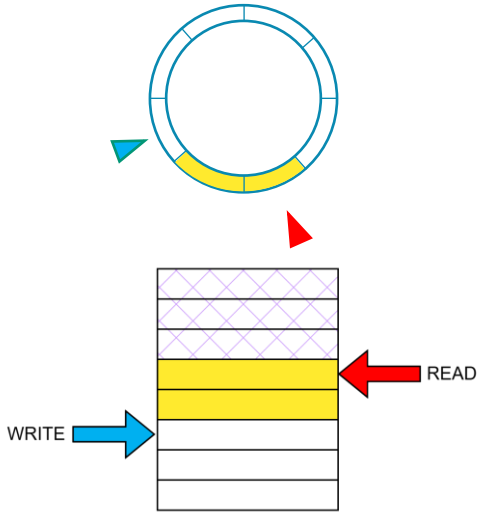

5 Entries Written
3 Entries Read

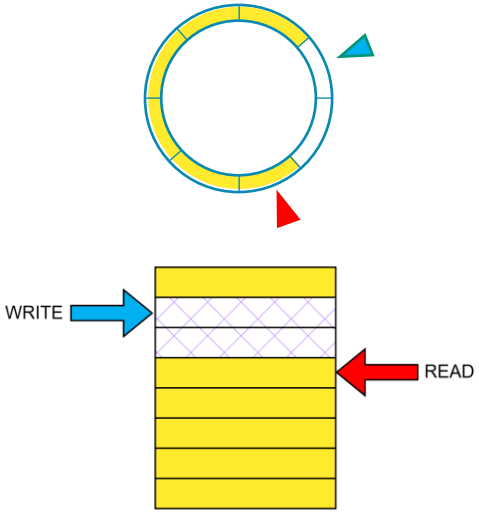

9 Entries Written
3 Entries Read

Empty And Full Conditions

- Underflow occurs when the buffer is empty, and a read operation is attempted. This can be managed by stopping reads when the buffer is empty.
- Overflow occurs when the buffer is full, and new data tries to overwrite unread data. This can be managed by stopping writes when the buffer is full.
- The question now is: how to determine if the FIFO is empty or Full?
- **From the 2 diagrams below we can see that when the two pointers are equal if the FIFO is either empty or full but we can't tell which.**
  - The full condition happens when the write pointer wraps around and is a complete cycle ahead of the read pointer.
  - If there is a flag that indicates wrapping around, we will be able to tell if the FIFO is empty or full
  - The conditions are therefore:
    - **Empty** : Pointers are equal and wrap flags are also equal.
    - **Full** : Pointers are equal and wrap flags are not equal.

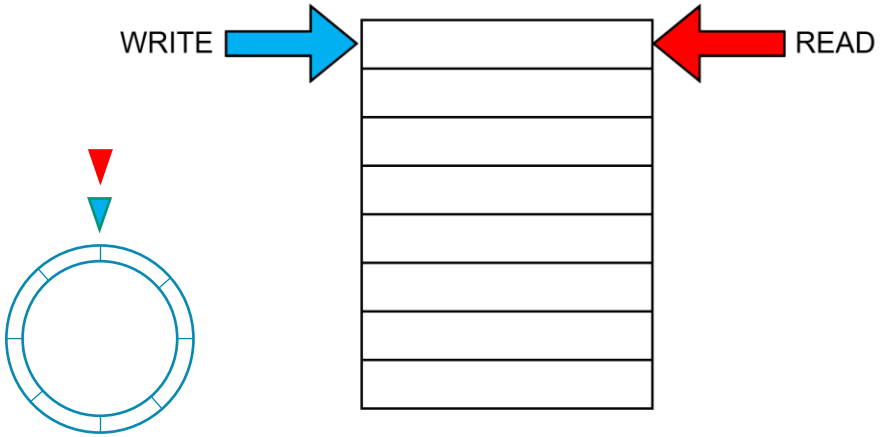

Empty FIFO

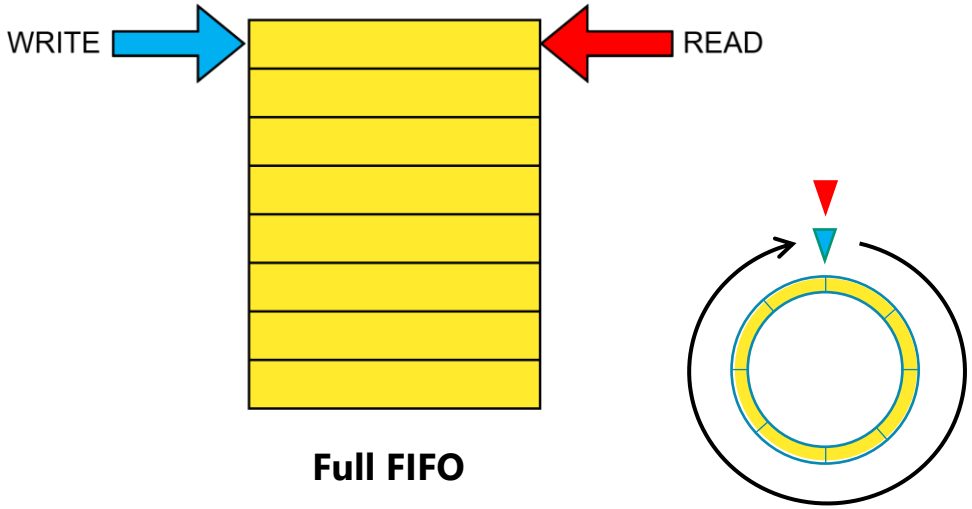

Full FIFO

Empty And Full Conditions Implementation

- **To implement the write and read pointer with the added flag you have to do the following when the pointer reaches the max value (the end):**
  - Reset the pointer
  - Toggle the flag
- If the FIFO depth is a power of 2 you don't need to create additional logic to handle the resetting and toggling.
- That's because once the pointer reaches the max value it will overflow and thus automatically reset the pointer and toggle the most significant bit (MSB)

5

Flag	Ptr
0	000
0	001
0	010
0	011
0	100
1	000
1	001
1	010
1	011
1	100
0	000

5-Deep FIFO

Flag	Ptr
0	000
0	001
0	010
0	011
0	100
0	101
0	110
0	111
1	000

8-Deep FIFO

Gray Encoder And Decoder

Binary to Gray Encoder

- Gray code is a binary numeral system where two successive values differ in only one bit.
- **To convert a binary number to its corresponding Gray code:**
  - The most significant bit (MSB) of the Gray code is the same as the MSB of the binary input.
  - Each subsequent Gray code bit is derived by XOR-ing the corresponding binary bit with the next higher-order binary bit.
  - <u>Example: If binary_in is 3'b101 (binary), then:</u>
    - gray_out[2] = binary_in[2] = 1
    - gray_out[1] = binary_in[2] ^ binary_in[1] = 1 ^ 0 = 1
    - gray_out[0] = binary_in[1] ^ binary_in[0] = 0 ^ 1 = 1
    - So, gray_out will be 3'b111 (Gray code).

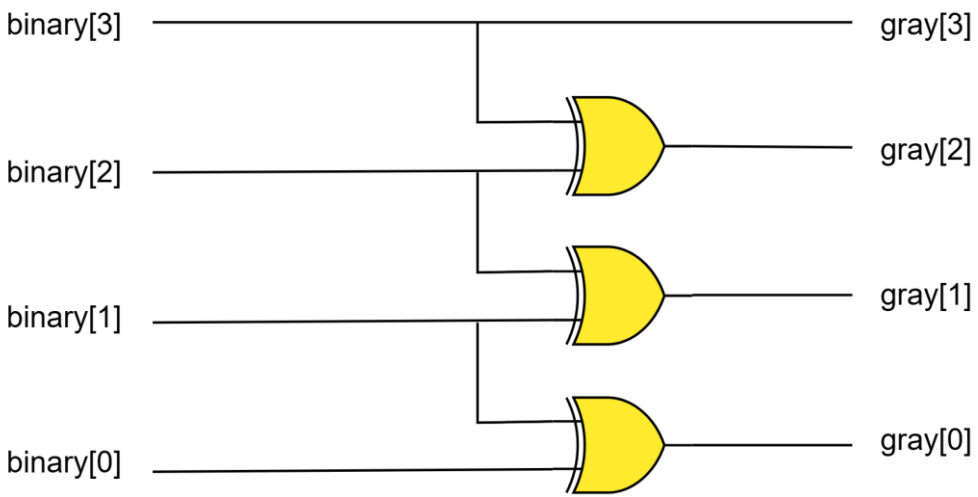

4-Bit Binary to Gray

Gray to Binary Decoder

- **To convert a Gray Code to its corresponding binary code:**
  - The most significant bit (MSB) of the Gray code is the same as the MSB of the binary input.
  - Each subsequent binary bit is derived by XOR-ing the previous binary bit with the corresponding Gray code bit.
  - <u>Example: If gray_in is 3'b111 (Gray), then:</u>
    - binary_out[2] = gray_in[2] = 1
    - binary_out[1] = binary_out[2] ^ gray_in[1] = 1 ^ 1 = 0
    - binary_out[0] = binary_out[1] ^ gray_in[0] = 0 ^ 1 = 1
    - So, binary_out will be 3'b101 (binary code).

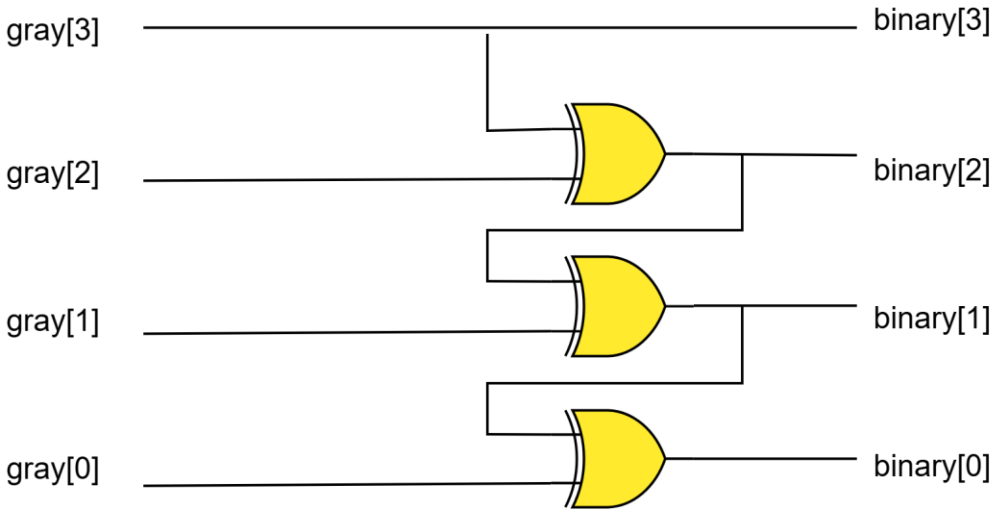

4-Bit Gray to Binary

Verilog Code

```
module binary_to_gray #(
    parameter N = 3  // Parameter to define the bit-width,
default is 3
)(
    input  [N-1:0] binary_in,  // N-bit binary input
    output [N-1:0] gray_out    // N-bit Gray code output
);

    // Assigning the MSB directly as it remains the same
    assign gray_out[N-1] = binary_in[N-1];

    // Loop to calculate the Gray code output from binary
    genvar i;
    generate
        for (i = N-2; i >= 0; i = i - 1) begin : bin_to_gray
            assign gray_out[i] = binary_in[i+1] ^ binary_in[i];
        end
    endgenerate

endmodule
```

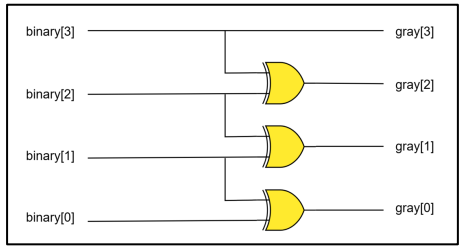

Binary to Gray

```
module gray_to_binary #(
    parameter N = 3  // Parameter to define the bit-width,
default is 3
)(
    input  [N-1:0] gray_in,   // N-bit Gray code input
    output [N-1:0] binary_out // N-bit binary output
);

    // Internal wire to store intermediate results
    wire [N-1:0] binary_temp;

    // Assigning the MSB directly as it remains the same
    assign binary_temp[N-1] = gray_in[N-1];

    // Loop to calculate the binary output from Gray code
    genvar i;
    generate
        for (i = N-2; i >= 0; i = i - 1) begin : gray_to_bin
            assign binary_temp[i] = binary_temp[i+1] ^
gray_in[i];
        end
    endgenerate

    // Assign the result to output
    assign binary_out = binary_temp;

endmodule
```

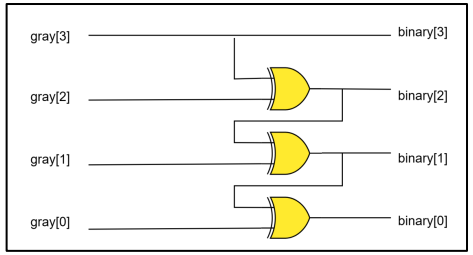

Gray to Binary

CDC FIFO

CDC FIFO

- **Write Interface (Write Logic)**
  - Function: The write interface is responsible for writing data into the FIFO. It operates in the write clock domain (write_clk).
  - Components:
    - Write Pointer (write_ptr): Tracks the position in the FIFO where the next data element will be written.
    - Write Enable Signal: Controls when data can be written to the FIFO, typically asserted when the FIFO is not full.
    - Write Data (data_in): The actual data to be written into the FIFO.
  - Process: Each time a write operation occurs (triggered by the write clock), the data is stored at the location indicated by the write pointer, and the write pointer is incremented.
- **Read Interface (Read Logic)**
  - Function: The read interface is responsible for reading data out of the FIFO. It operates in the read clock domain (read_clk).
  - Components:
    - Read Pointer (read_ptr): Tracks the position in the FIFO from where the next data element will be read.
    - Read Enable Signal: Controls when data can be read from the FIFO, typically asserted when the FIFO is not empty.
    - Read Data (data_out): The data read from the FIFO, presented to the output.
  - Process: Each time a read operation occurs (triggered by the read clock), the data is read from the location indicated by the read pointer, and the read pointer is incremented.
- An animation of the operation can be found here : https://lnkd.in/ezUCAx9a

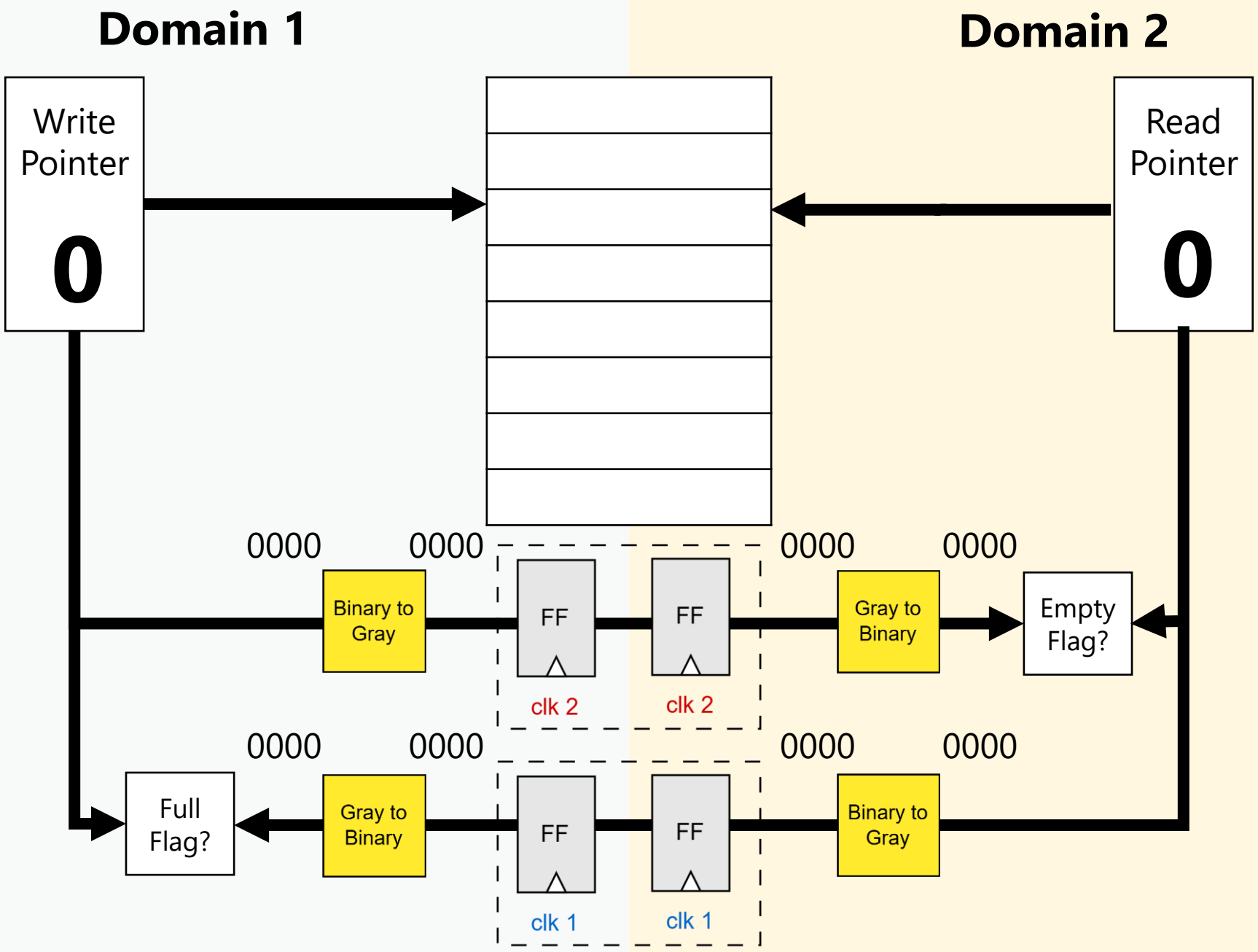
Domain 1
Domain 2
Write Pointer
0
Read Pointer
0
0000
0000
0000
0000
Binary to Gray
FF
FF
Gray to Binary
Empty Flag?
clk 2
clk 2
0000
0000
0000
0000
Full Flag?
Gray to Binary
FF
FF
Binary to Gray
clk 1
clk 1

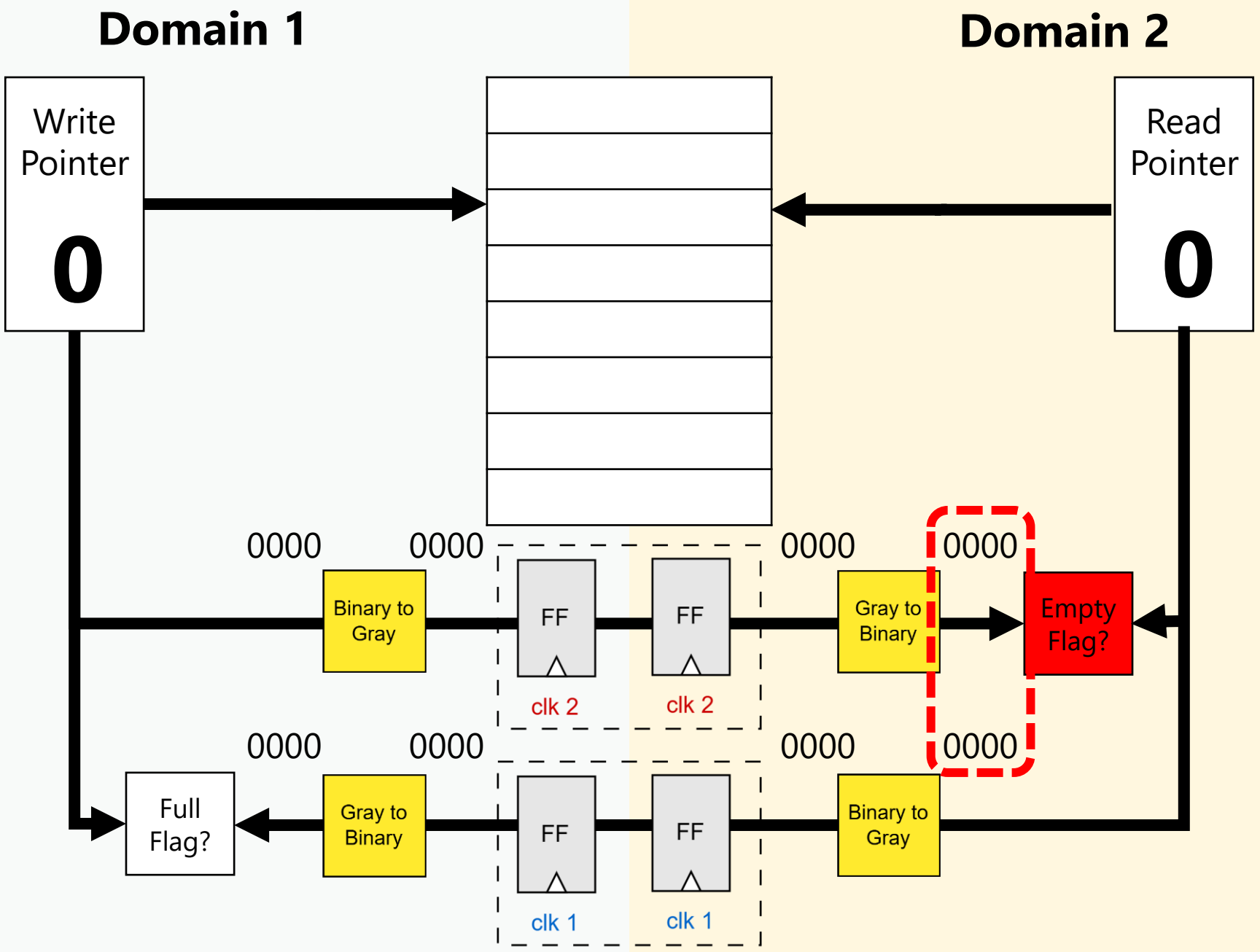

Domain 2 won't read any data as long as the empty flag is high

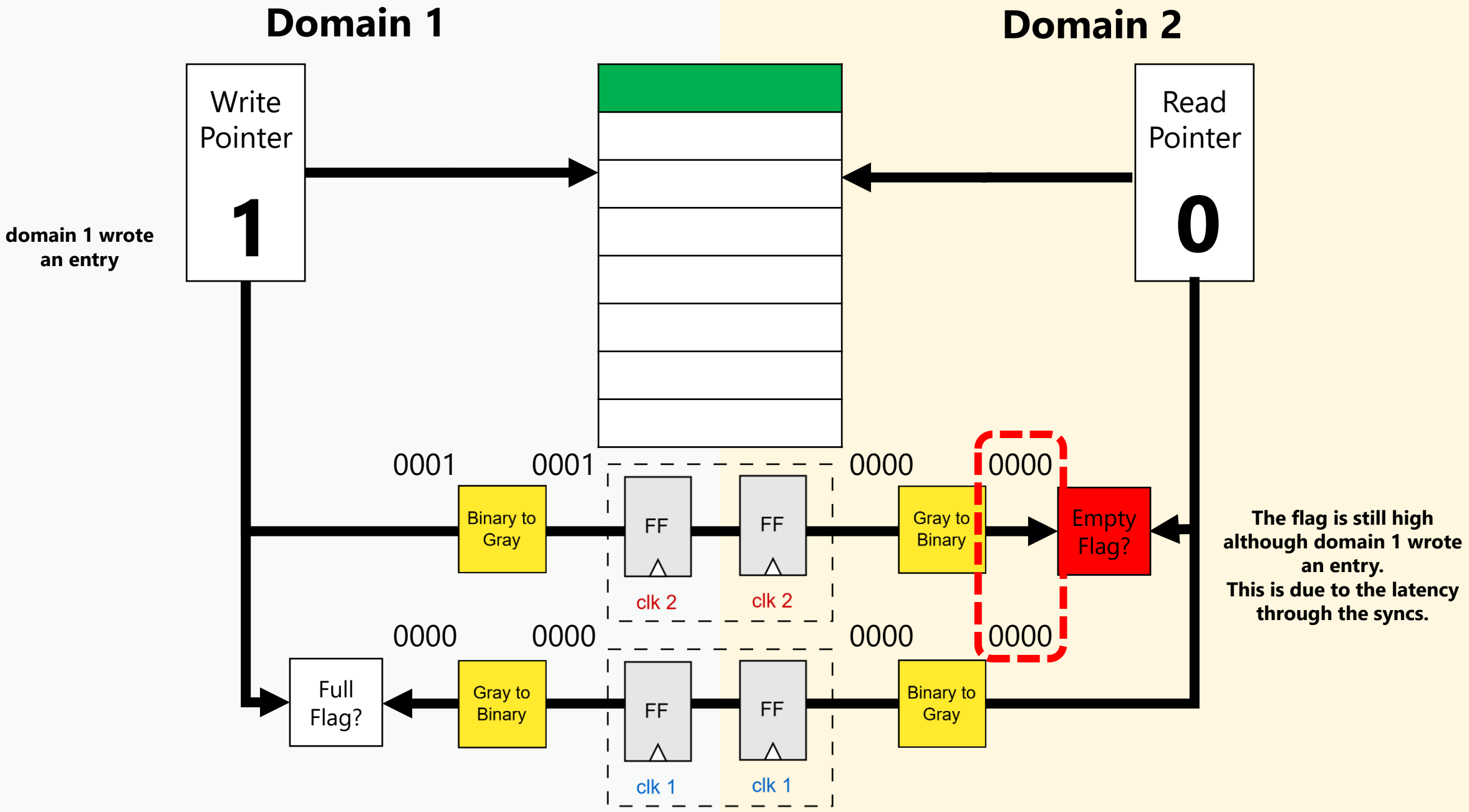
Domain 1
Domain 2
Write Pointer
1
Read Pointer
0
domain 1 wrote an entry
0001
0001
0000
0000
Binary to Gray
FF
FF
Gray to Binary
Empty Flag?
clk 2
clk 2
0000
0000
0000
0000
Full Flag?
Gray to Binary
FF
FF
Binary to Gray
clk 1
clk 1
The flag is still high although domain 1 wrote an entry.
This is due to the latency through the syncs.

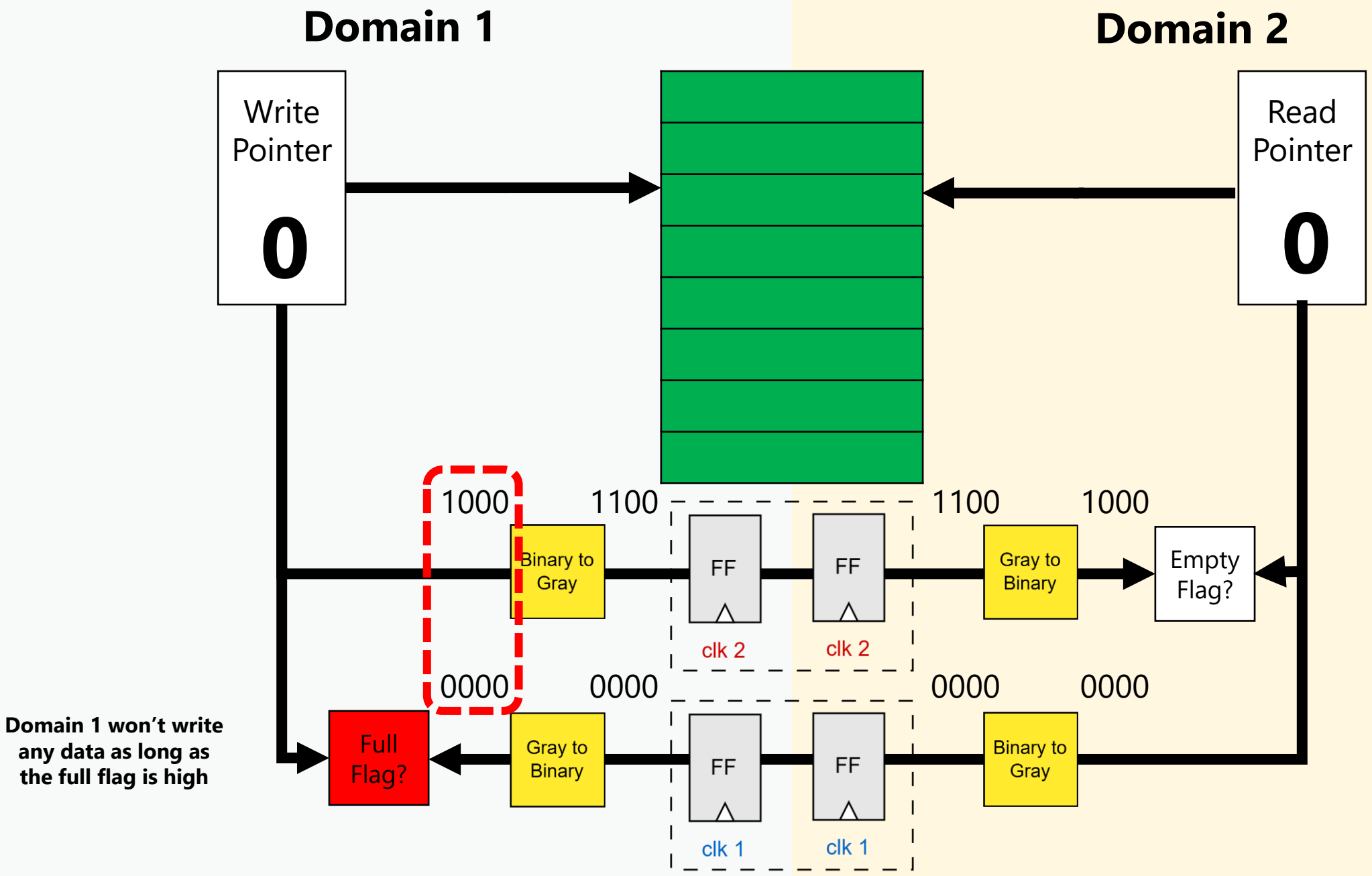
Domain 1
Domain 2
Write Pointer
0
Read Pointer
0
1000
1100
1100
1000
Binary to Gray
FF
FF
Gray to Binary
Empty Flag?
clk 2
clk 2
0000
0000
0000
0000
Full Flag?
Gray to Binary
FF
FF
Binary to Gray
clk 1
clk 1
Domain 1 won't write any data as long as the full flag is high

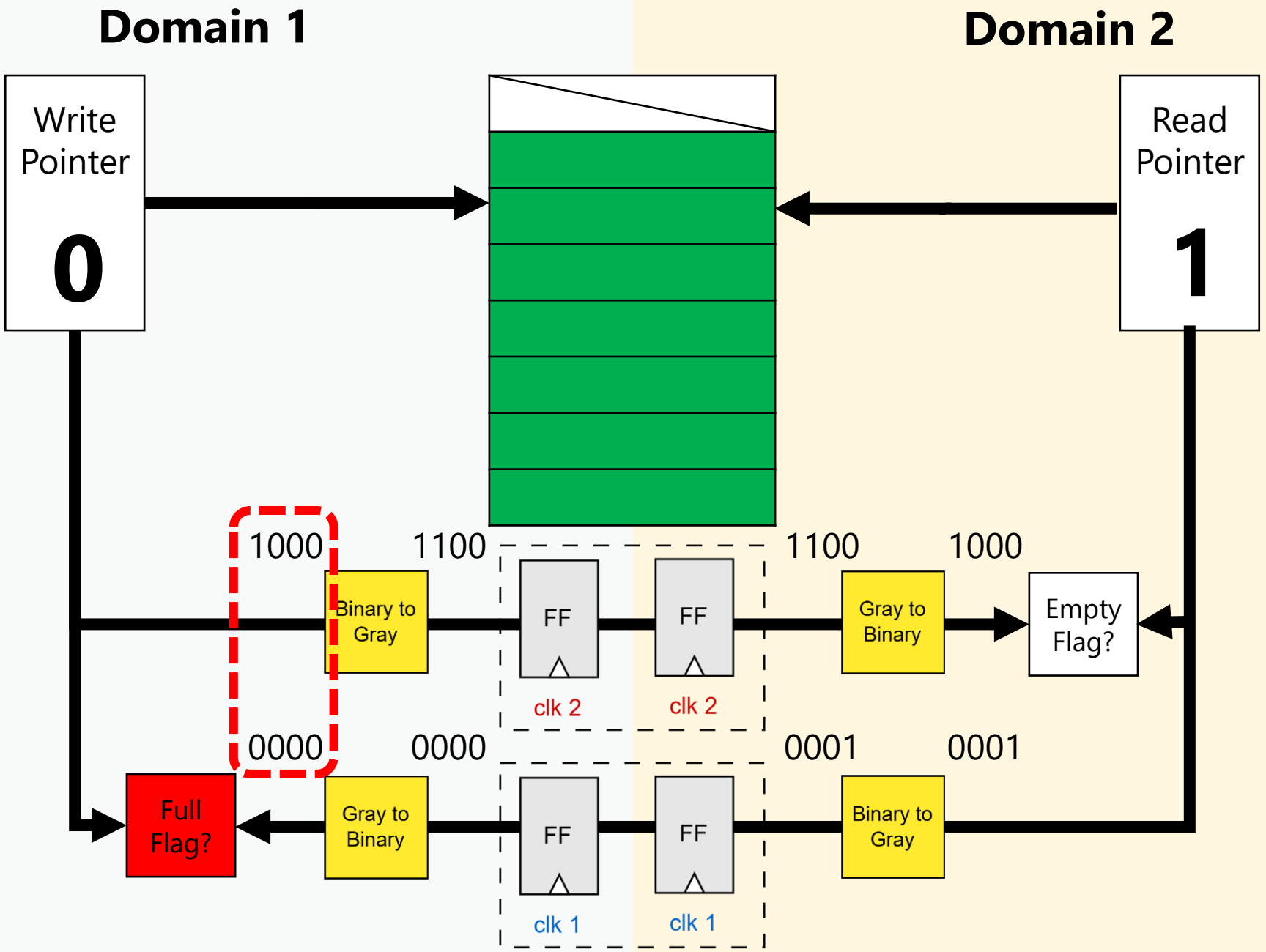

Domain 2 read an entry

The flag is still high although domain 2 read an entry. This is due to the latency through the syncs.

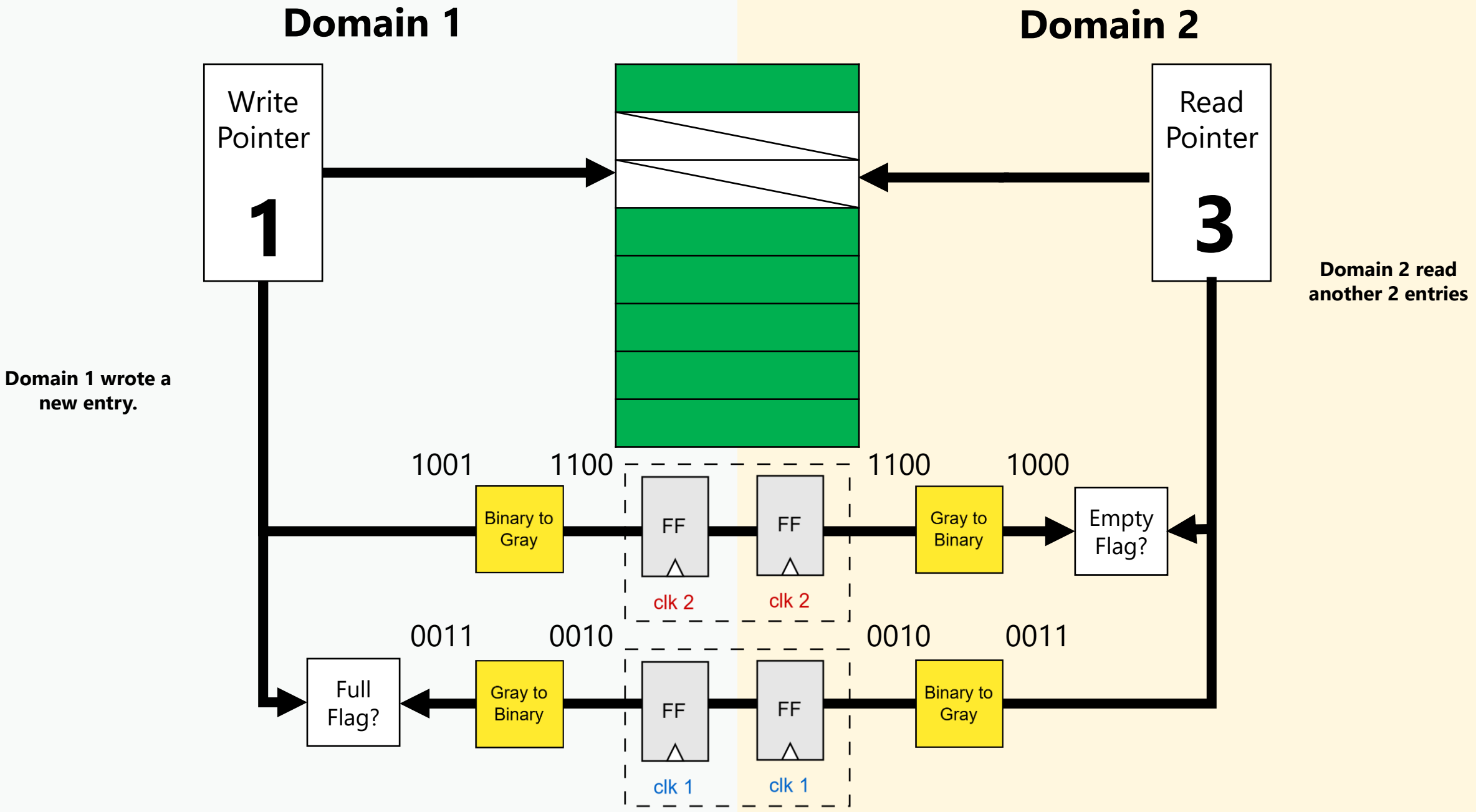

Write and read can happen simultaneously

FIFO Depth

- FIFO depth is crucial to prevent data overflow (when the FIFO is too shallow) or underutilization (when the FIFO is too deep).
- The data arrives in bursts (periods of high activity followed by inactivity), the FIFO must be deep enough to hold all the burst data until it can be processed.
- If the write domain writes **N** data samples within time **T** and the read domain reads **M** data samples within the same time we end up with **N-M** samples that need to be stored in the FIFO.
- For example if the write domain is 3 times faster than the read domain. For every 3 samples written the slow domain will be able to read only one sample.
- If the write domain write a burst of N samples. The read domain will only read $\frac{N}{3}$ samples leaving $\frac{2N}{3}$ samples that need to be stored
- **The size is therefore calculated as**

$$Depth = Burst\ - Burst \times \frac{f_{read}}{f_{write}}$$

$$Depth = Burst \times \left(1 - \frac{f_{read}}{f_{write}}\right)$$

FIFO Depth - Examples

- **Let $f_{write} = 400\ MHz, f_{read} = 150\ MHz$. Burst size = 120. There are no idle cycles between consecutive writes or read operations.**
  - $Depth = Burst\left(1 - \frac{f_{read}}{f_{write}}\right) = 120\left(1 - \frac{150}{400}\right) = 75$ location.
  - The size rounded to power of 2 = 128 locations.

- **Let $f_{write} = 400\ MHz, f_{read} = 150\ MHz$. Burst size = 120. There is 1 idle cycle between consecutive writes.**
  - The idle cycle will slow down the writing operation giving the read operation more time to read. We should expect the required size to decrease
  - With the idle cycle, the write domain takes 2 cycles for each write instead of 1. Effectively the frequency is halved.
  - $Depth = Burst\left(1 - \frac{f_{read}}{f_{write}/2}\right) = 120\left(1 - \frac{150}{400/2}\right) = 30$ location.
  - The size rounded to power of 2 = 32 locations.

- More examples can be found in this document by **Putta Satish :** https://shorturl.at/qBrGl

References

1) http://www.sunburst-design.com/papers/CummingsSNUG2008Boston_CDC.pdf
2) https://www.uio.no/studier/emner/matnat/ifi/IN3160/v21/timeplan/in3160-l92-clock-domains.pdf
3) https://ieeexplore.ieee.org/document/1676187
4) https://www.edn.com/keep-metastability-from-killing-your-digital-design/
5) https://people.ece.ubc.ca/~edc/7660.jan2018/lec11.pdf
6) https://www.onsemi.com/pub/Collateral/AN1504-D.PDF

Thank You!