On Chip Variation (OCV)

Amr Adel Mohammady

/amradelm

This Document Is Dedicated to Thousands of Palestinian Children Who

Were Killed

Lost Their Limps

Became Orphans

Are Starved

At The Hands of These War Criminals

Introduction

- On-Chip Variation refers to the variation in performance parameters (such as delay, power consumption, etc.) among different instances of the same integrated circuit design due to manufacturing process variations, environmental conditions, and other factors.

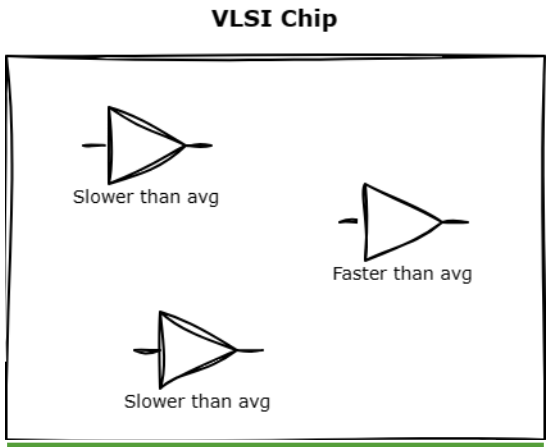

Gates with the same size and function can have different delays

Sources of OCV

- **Process Variations:** Variations in the manufacturing process can lead to differences in transistor characteristics (such as threshold voltage, oxide thickness, doping concentration, etc.)

- **Temperature Variations:** Temperature fluctuations across the chip during operation can cause variations in transistor behaviour and interconnect delays.

- **Supply Voltage Variations:** Fluctuations in the supply voltage, due to factors like power supply noise or voltage drop, can affect the performance of transistors and circuits.

- **Interconnect Variations:** Variations in interconnect resistance, capacitance, and parasitic effects can lead to differences in signal propagation delay and power consumption

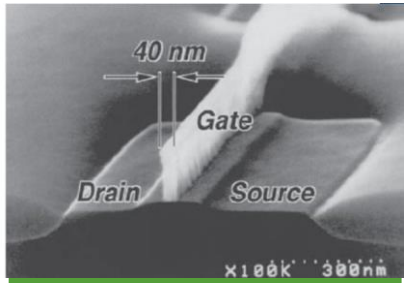

MOSFET under microscope [1]

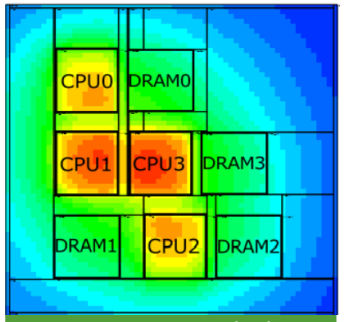

Temperature variations on chip [2]

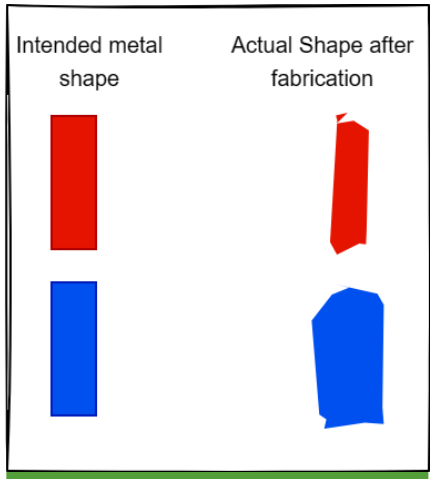

Variations in interconnect

On Chip Variation (OCV) vs Process Voltage Temperature (PVT)

- **PVT** discusses global variation affecting the entire chip including all instances (Die to die variations)
- **OCV** discusses the variations that happen within the same chip
- This document will discuss **OCV** only

	PVT	OCV
Process	Systematic and large variations such as doping, oxide thickness, etc can affect entire parts of a wafer resulting in all instance within the chip to be faster or slower than average	Non systematic and smaller variations that affect some instance within a chip while not affecting others
Voltage	Difference in the supply voltage provided to the entire chip For example, a chip can have two operating voltages 3V for high performance mode and 2V for low power mode	Variations between different cells due to different power grid resistances or hotspots with high cell density For example, for a supply 3V, a cell gets 2.9V while another one near it gets 2.85V
Temperature	Ambient temperature where the chip will be operated For example, the chip is being used in summer vs winter or in a cooled server room ($-40℃$) vs hot car engine ($120℃$)	Temperature variations withing the same chip due to parts of the chip consuming more power than others or hotspots with high cell density. For example, the CPU within a chip has a temp of $125℃$ while the rest of the chip has a temp of $100℃$
Interconnect	Large variations affecting characteristics of all the wires on the chip For example, chemical variations resulting in all wires within a chip to have higher resistivity than average	Smaller variations between the wires within the same chip For example, due to random variations in etching, a wire was etched more than a wire near it resulting in a narrower wire with more resistance

Worst Case Analysis

- Since we can't know before fabrication which standard cell or wire will get slower and which will get faster, we will assume **worst case scenario.**

- **Setup Analysis:**
  a. Combinational path: The worst case is to assume this path will get slower
  b. Launch clock path: Assume this path will get slower
  c. Capture clock path: Assume this path will get faster

- **Hold Analysis:**
  a. Combinational path: The worst case is to assume this path will get faster
  b. Launch clock path: Assume this path will get faster
  c. Capture clock path: Assume this path will get slower

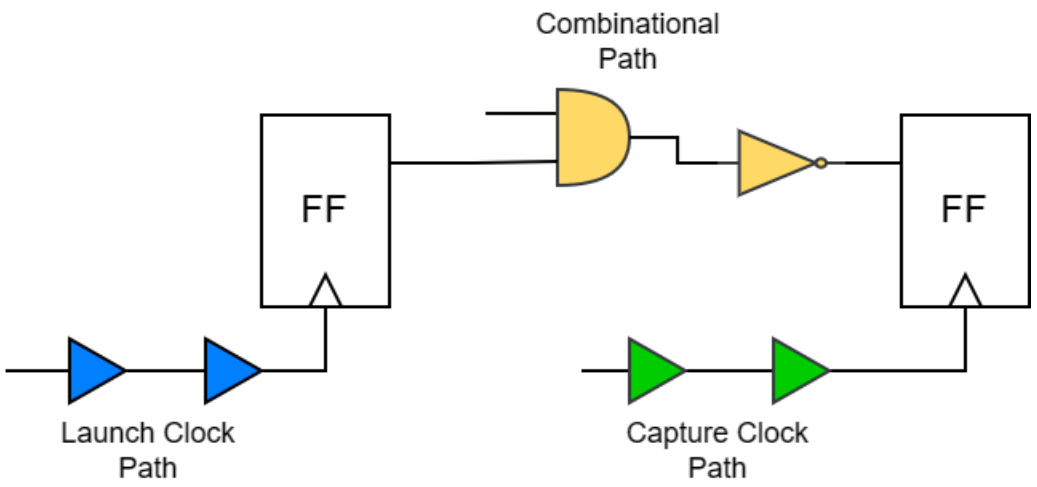

- The naming convention for slow and fast assumptions are called late and early analysis or max and min delay respectively.

Pessimism and Optimism

- **Pessimism**: When we assume worst case scenario, we say we add pessimism to our analysis. The worse the assumptions the more pessimism we add.
  - An overly pessimistic approach may result in designs that are larger, or consume more power than necessary to meet the unrealistic constraints.
- **Optimism**: Involves a more optimistic approach to OCV analysis. Instead of considering the worst-case scenario, designers may use statistical methods to analyze variations.
  - An overly optimistic approach risks potential timing violations and hence chip failure.
- Our goal is to remove any over pessimism without letting a timing violation slip through our analysis.

Cell Delay OCV

Types of OCV Analysis – **Flat Derates**

- In this approach we assume a **fixed** and **uniform** derate value across the entire chip
  - For example : Assume all cells are 10% slower in late analysis and 10% faster in early analysis
- **Pros** :
  - Easy to apply
  - Doesn't require additional library files
- **Cons** :
  - Adds over pessimism because it assumes all cells in a path are slower/faster, but in reality some cells will be slower and some will be faster, hence the variations will cancel each other
  - Assumes all cells vary with the same degree. However, a NAND gate may have different variation behavior than a buffer, and a small cells may differ than a large cell.
- This approach is used for large tech nodes (> 90nm). However, for small tech nodes the over pessimism makes it difficult to meet the requirements especially for high speed designs.

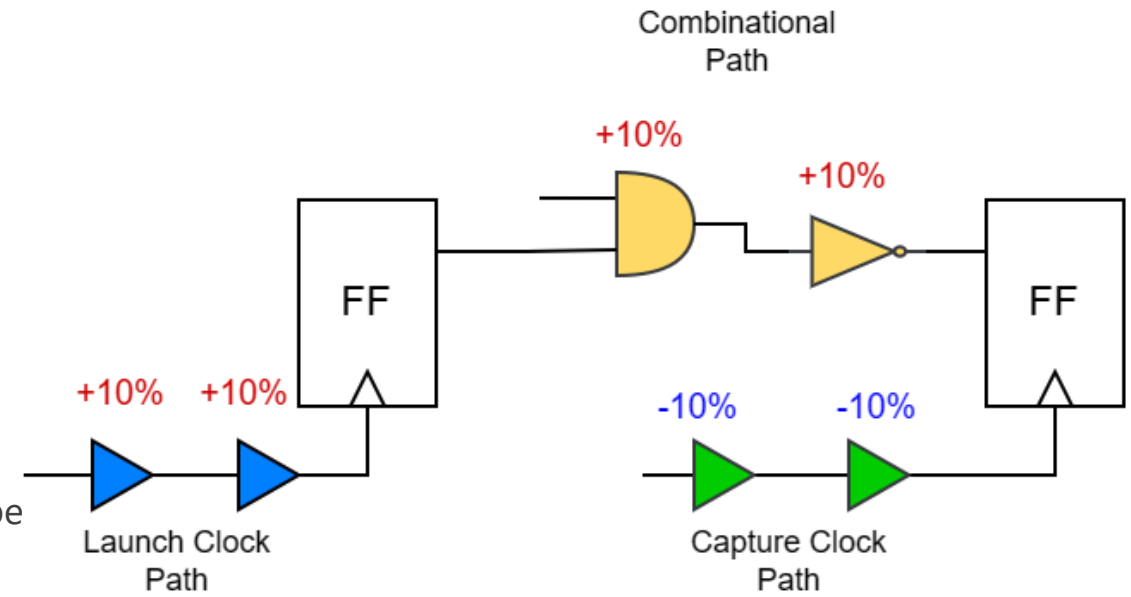

Flat derates applied for setup analysis

Types of OCV Analysis – **Advanced On-chip Variation (AOCV)**

- This approach relies on 3 observations
  - **Distance**: When the distance between the cells increase, it becomes more likely that they vary in process temperature or voltage. Therefore, as the distance increases the derate will increase
  - **Depth**: As the depth (number of cells in the path) increases, the random variations tend to cancel each other out. Therefore, as the depth increases derate will decrease
  - **Cell Type**: The variation behavior will vary depending on cell type and size
- The derate of each cell is taken from tables defined inside the timing library files (.lib/.db) and the derate value depend on the cell distance from the bounding box that encloses all path cells and the depth of the cell on the timing path. <u>Look at the next slide!</u>
- **Pros** : Removes some of the pessimism of the flat derates approach
- **Cons** :
  - Requires additional tables for the derates
  - Higher runtime
- This approach is used for mid tech nodes (> 40nm). However, for small tech nodes there is still over pessimism that AOCV can't cancel

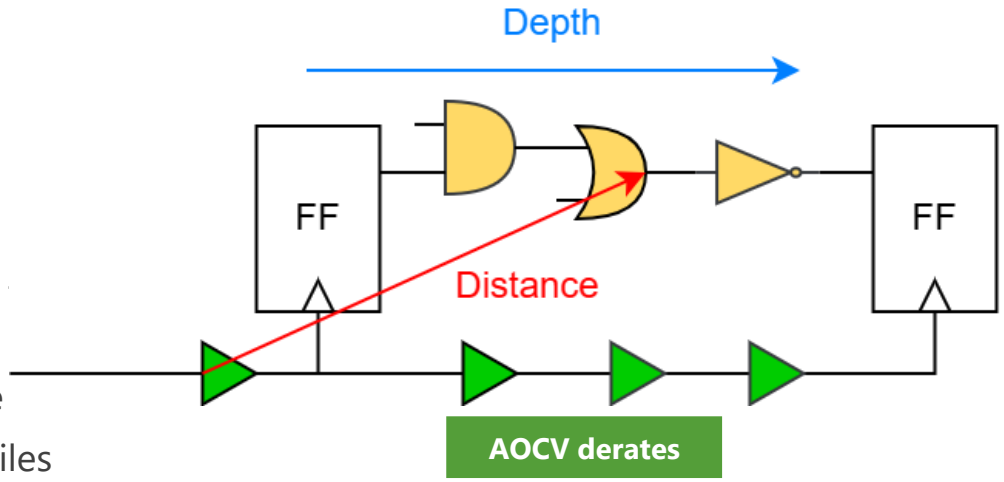

Depth (Decrease with depth)

Distance (Increase with distance)

	1	**5**	**10**	**20**
1000	1.10	1.08	1.04	1.02
2000	1.15	1.10	1.07	1.05
3000	1.2	1.14	1.12	1.10

AOCV derates table

Advanced On-chip Variation (AOCV) - Calculations

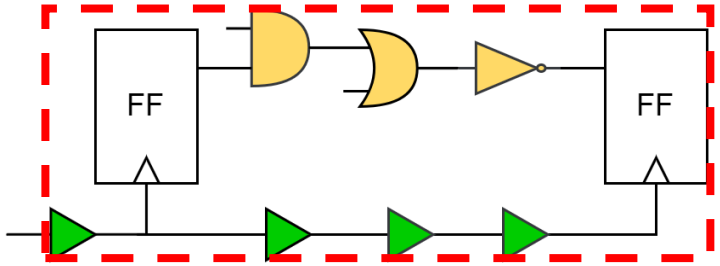

1 The STA tool creates a bounding box that encloses all cells in the timing path

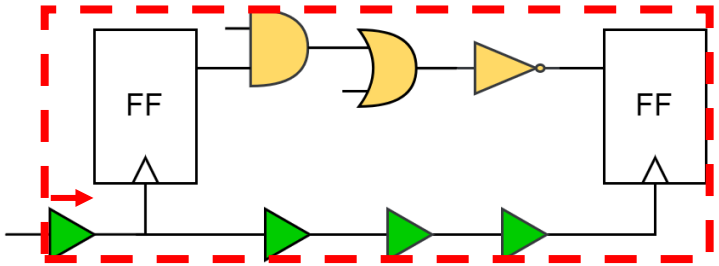

2 The STA tool gets the derate value of the 1st cell (clock buffer) from its AOCV tables

Depth →

Distance ↓

	1	5	10	20
0	1.10	1.08	1.04	1.02
500	1.15	1.10	1.07	1.05
1500	1.2	1.14	1.12	1.10

Buffer AOCV Table

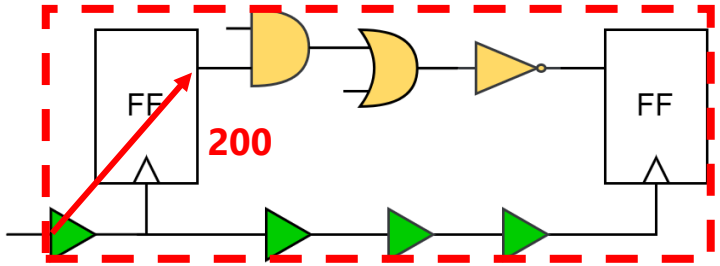

3 The STA tool gets the derate value of the 2nd cell (FF) from its AOCV tables. Since the distance (200) is not in the table, the tool will do interpolation

Depth →

Distance ↓

	1	2	3	4
0	1.11	1.1	1.08	1.06
500	1.13	1.12	1.11	1.08
1500	1.15	1.14	1.13	1.09

FF AOCV Table

$$\frac{x - 1.10}{200 - 0} = \frac{1.12 - 1.10}{500 - 0}$$

$$x = 1.108$$

Types of OCV Analysis – **Parametric On-chip Variation (POCV)**

- This approach considers the cell a random variable with mean $\boldsymbol{\mu}$ and standard deviation $\boldsymbol{\sigma}$
- Using $\sigma = \pm 1$ means there is 68.26% probability that the cell delay will fall within this range
- STA tools usually use a deviation $\sigma = 3$ to have a more accurate analysis but the designer can select whatever fits his requirements
- The cell delay =
  - Mean **+** 3σ for **late** analysis
  - Mean **–** 3σ for **early** analysis
- The mean and deviation are defined inside the timing library of each cell and sometimes the deviation is stored in a different file (.pocv file)
- **Pros** : Removes the pessimism of the AOCV approach
- **Cons** :
  - Requires additional tables for the derates
  - Higher runtime
- This approach is used for low tech nodes (< 40nm).

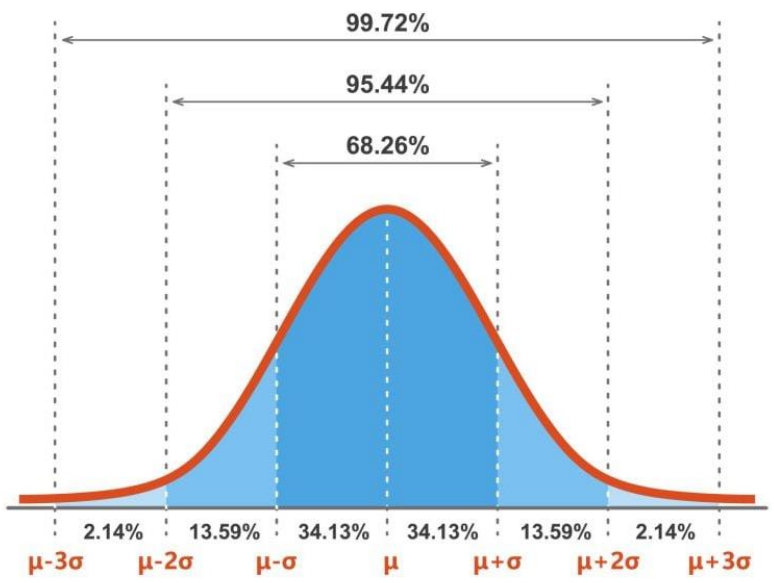

POCV derates

Parametric On-chip Variation (POCV) - Calculations

$\mu = 1$
$\sigma^2 = 1$

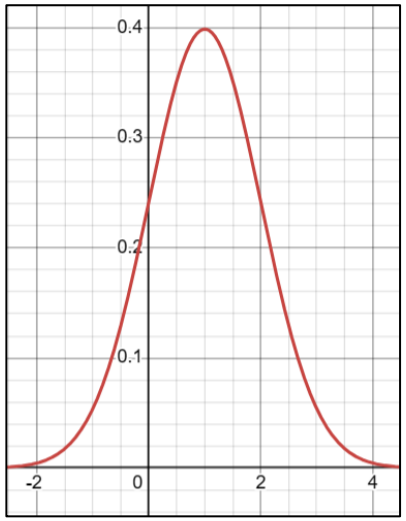

+

$\mu = 2$
$\sigma^2 = 2$

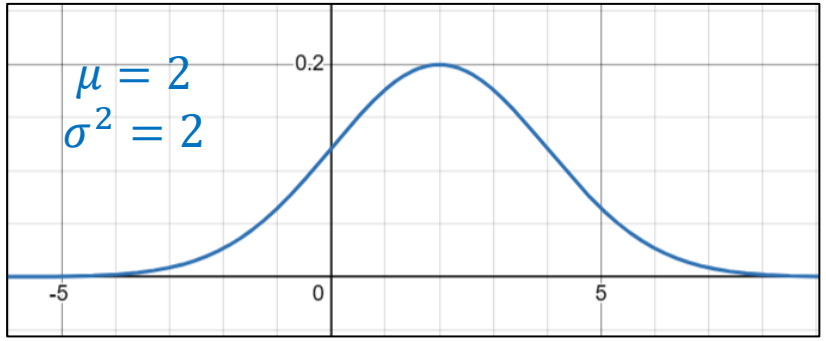

=

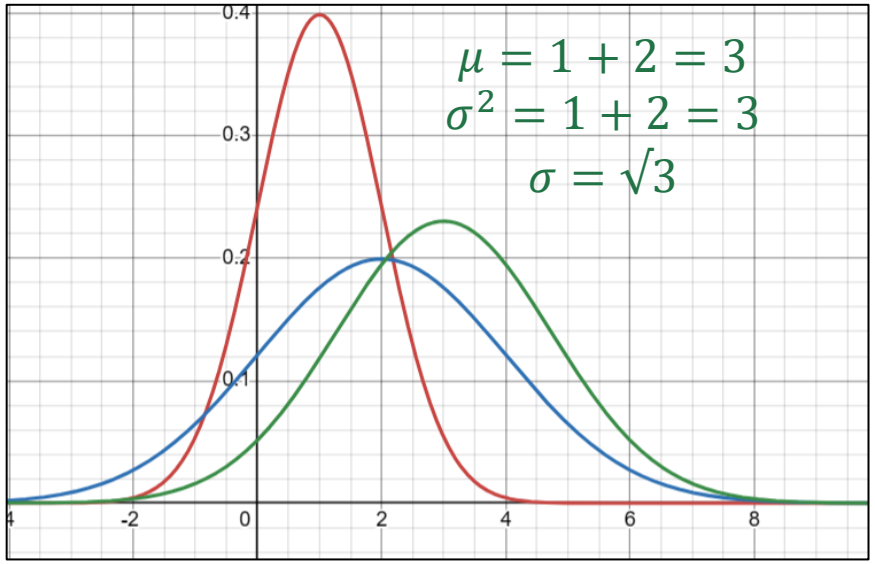

- In probability theory, the sum of N normally distributed random variables is also a normally distributed random variable
- The mean of the sum = The sum of means of all random variables
- The variance of the sum = The sum of variances of all random variable
- Standard deviation = $\sqrt{\text{variance}}$

Parametric On-chip Variation (POCV) - Calculations

1 The STA tool calculates the sum of the random variables (NAND + INV)

$$\mu = 60 + 80 = 140$$
$$\sigma^2 = 3^2 + 4^2 = 25$$
$$\sigma = \sqrt{25} = 5$$

2 The total delay of the path (NAND+INV)
$= \mu + 3\sigma = 140 + 3 * 5 = 155$ (assuming setup and 3σ analysis)

* The delay of the NAND
$= \mu + 3\sigma = 60 + 3 * 3 = 69$

* The delay of INV
$= total\ delay - NAND\ delay = 155 - 69 = 86$

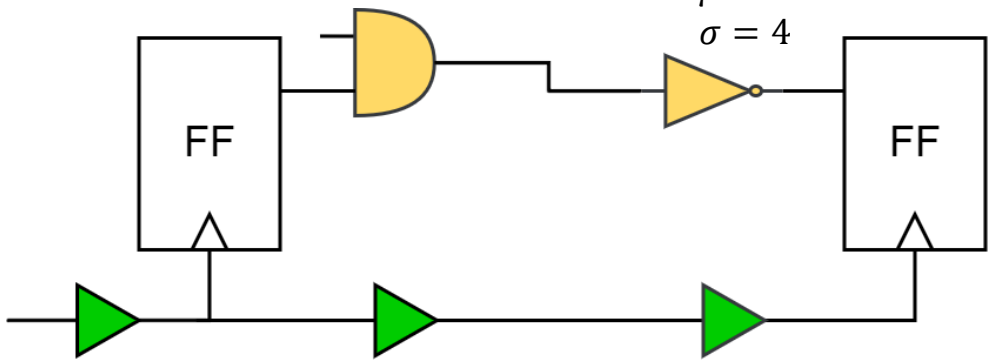

$$\mu = 20 + 30 = 50$$
$$\sigma^2 = 1^2 + 1.5^2 = 3.25$$
$$\sigma = \sqrt{3.25} = 1.8$$

3 For the capture path, early analysis is done
The total delay $= \mu - 3\sigma = 50 - 3 * 1.8 = 44.6$

POCV vs LVF (Library Variation Format)

- **POCV** uses a single value for the sigma for each cell with no dependency on input transition or load capacitance

Cell : INV_4

Derate_type : Late

Coefficient : 0.05

Example POCV File

Sigma = mean * coefficient

- **LVF** provides a table of multiple value for the sigma with dependency on the input transition and load capacitance of the cell

Input Transition

Load Cap

	10	**15**	**20**	**25**
10	1.10	1.12	1.14	1.15
20	1.12	1.13	1.15	1.17
30	1.15	1.16	1.18	1.20

Example LVF Table

Temp and Voltage OCV

Temp and Voltage OCV – **Flat Derates**

- The standard cell supplier provides tables showing the expected derate factor for each voltage drop
- **The process for applying derates for voltage (IR) drop:**
  1. The designer decides on a maximum accepted IR drop (for example, 5% drop from the nominal voltage)
  2. The ASIC engineer runs EMIR analysis and make sure no cell in the chip has an IR drop that exceeds this maximum limit
  3. The STA engineer looks at the table provided from the standard cell provider and adds on the entire design a flat derate that corresponds to the maximum IR drop

- For temperature variations: This variation has smaller effect than other OCV effects
  - A flat derate value can be applied based on the designer experience or from tables

	2%	**3%**	**4%**	**5%**
Derate	1.03	1.05	1.06	1.07

Example IR Drop Table

Wire Delay OCV

Wire Delay Analysis – **Flat Derates**

- The OCV effect on wire delay is small compared to the effect on cell delays
- The approach used for wire OCV is applying a flat derate
- **The derate could be applied in two ways:**
  - Derate applied to the propagation delay of the wire
  - Scaling factor applied on the resistance and capacitance of the wire and hence the propagation delay. This approach also affects the load capacitance that the cells see and therefore, the cell propagation delay and transition time

Additional Topics

Clock Reconvergence Pessimism Removal (CRPR)

- STA tools calculate the clock paths (Launch/Capture) from clock ports down to the clock pins of the FFs
- **Flow assuming setup analysis:**
  1. The tool will consider the **launch** path (from clock port to clock pin of 1st FF) and will apply **positive** derates on it to model the worst case OCV
  2. The tool will then consider the **capture** path (from clock port to clock pin of 2nd FF) and will apply **negative** derates to model the worst case OCV
- We can see a clear over pessimism applied on the buffers common between the launch and capture paths (the **green** buffers) :
  - During launch analysis we assumed they faced a variation that caused them to be slower
  - During the capture analysis we assumed they faced a variation that caused them to be faster
  - In reality, these 2 events are mutually exclusive, either the buffers got slower or faster during fabrication but not both.
  - This issue is called **Clock Reconvergence Pessimism**

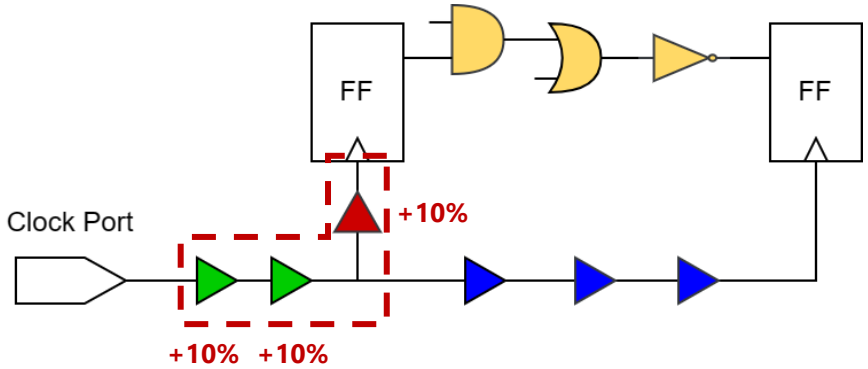

Derates applied on launch clock path

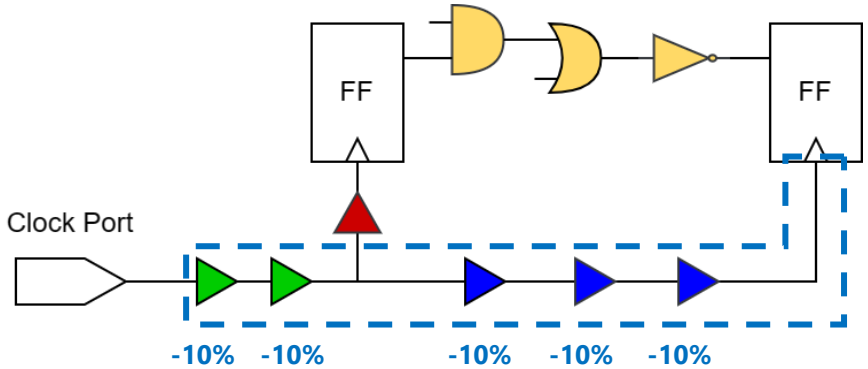

Derates applied on capture clock path

Clock Reconvergence Pessimism Removal (CRPR)

- To resolve this issue, STA tools calculate the difference in the common buffers delays due to the pessimism
- In this example, the pessimism for
  - **BUF_1** = $11 - 9 = 2$
  - **BUF_2** = $12 - 10.5 = 1.5$
  - **TOTAL** = 2 + 1.5 = 3.5
- The tool adds the total to the required time

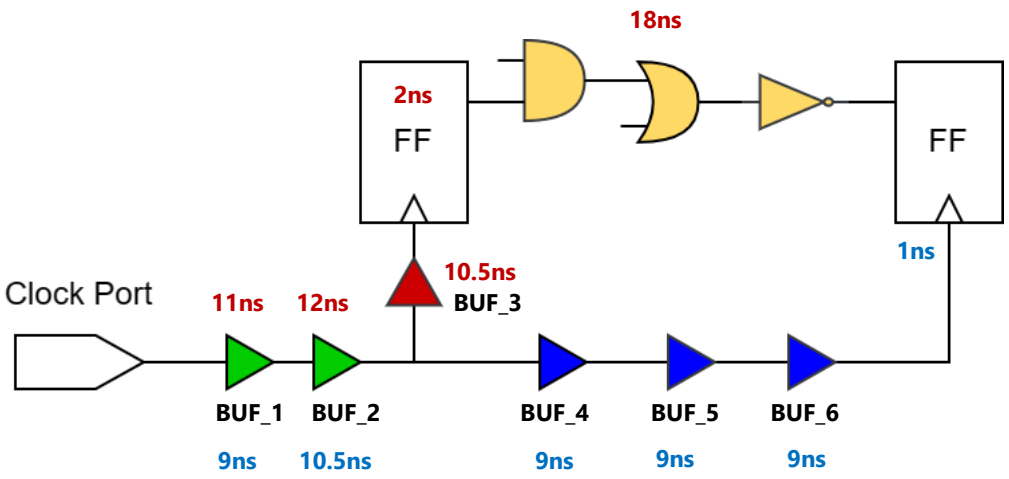

Without CRPR

	Path	Incr	Total
Arrival	BUF_1	11	11
	BUF_2	12	23
	BUF_3	10.5	33.5
	FF_TCQ	2	35.5
	Combinational path	18	53.5
Required	Clock Period	5	5
	BUF_1	9	14
	BUF_2	10.5	24.5
	BUF_4	9	33.5
	BUF_5	9	42.5
	BUF_6	9	51.5
	FF_Setup	-1	50.5
	Setup (Required – Arrival)		-3

With CRPR

Path	Incr	Total
BUF_1	11	11
BUF_2	12	23
BUF_3	10.5	33.5
FF_TCQ	2	35.5
Combinational path	18	53.5
Clock Period	5	5
BUF_1	9	14
BUF_2	10.5	24.5
BUF_4	9	33.5
BUF_5	9	42.5
BUF_6	9	51.5
FF_Setup	-1	50.5
CRPR	3.5	54
Setup (Required – Arrival)		+0.5

Citations

- [1] https://www.bbvaopenmind.com/en/technology/innovation/mini-transistors-technological-revolution-20th-century/
- [2] L. Chen, W. Jin and S. X. . -D. Tan, "Fast Thermal Analysis for Chiplet Design based on Graph Convolution Networks," 2022 27th Asia and South Pacific Design Automation Conference (ASP-DAC), Taipei, Taiwan, 2022, pp. 485-492, doi: 10.1109/ASP-DAC52403.2022.9712583.

Thank You!