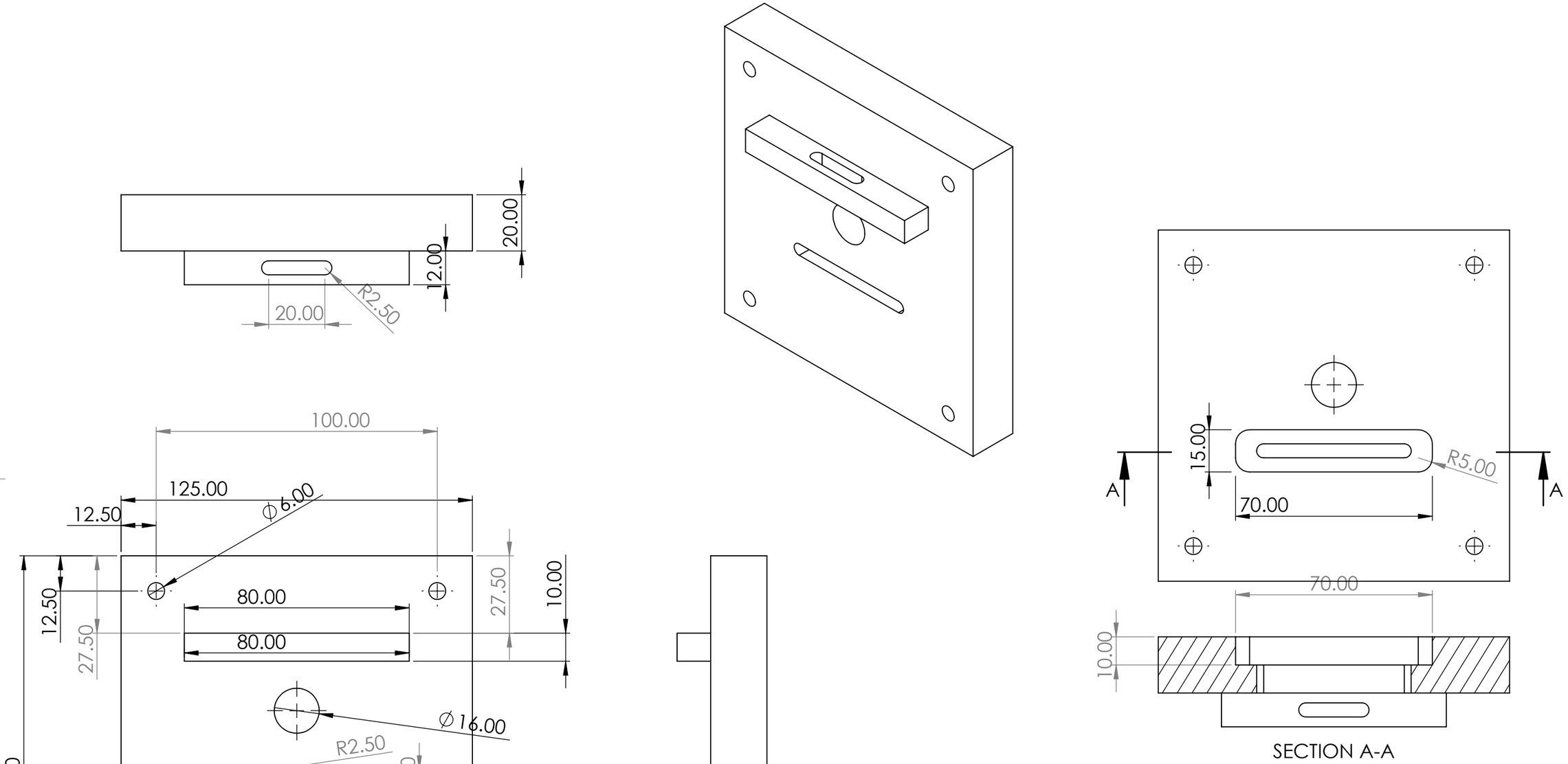

UNLESS OTHERWISE SPECIFIED: DIMENSIONS ARE IN MILLIMETERS SURFACE FINISH: TOLERANCES: LINEAR: ANGULAR:	FINISH:		DEBURR AND BREAK SHARP EDGES	DO NOT SCALE DRAWING	REVISION
	NAME	SIGNATURE	DATE	TITLE:	
DRAWN	A.ORR				
CHK'D					
APPV'D					
MFG					
Q.A				MATERIAL: ALUMINIUM	DWG NO. stage-perp-holder A3
				WEIGHT:	SCALE:1:1.5 SHEET 1 OF 1

SOLIDWORKS Educational Product. For Instructional Use Only.