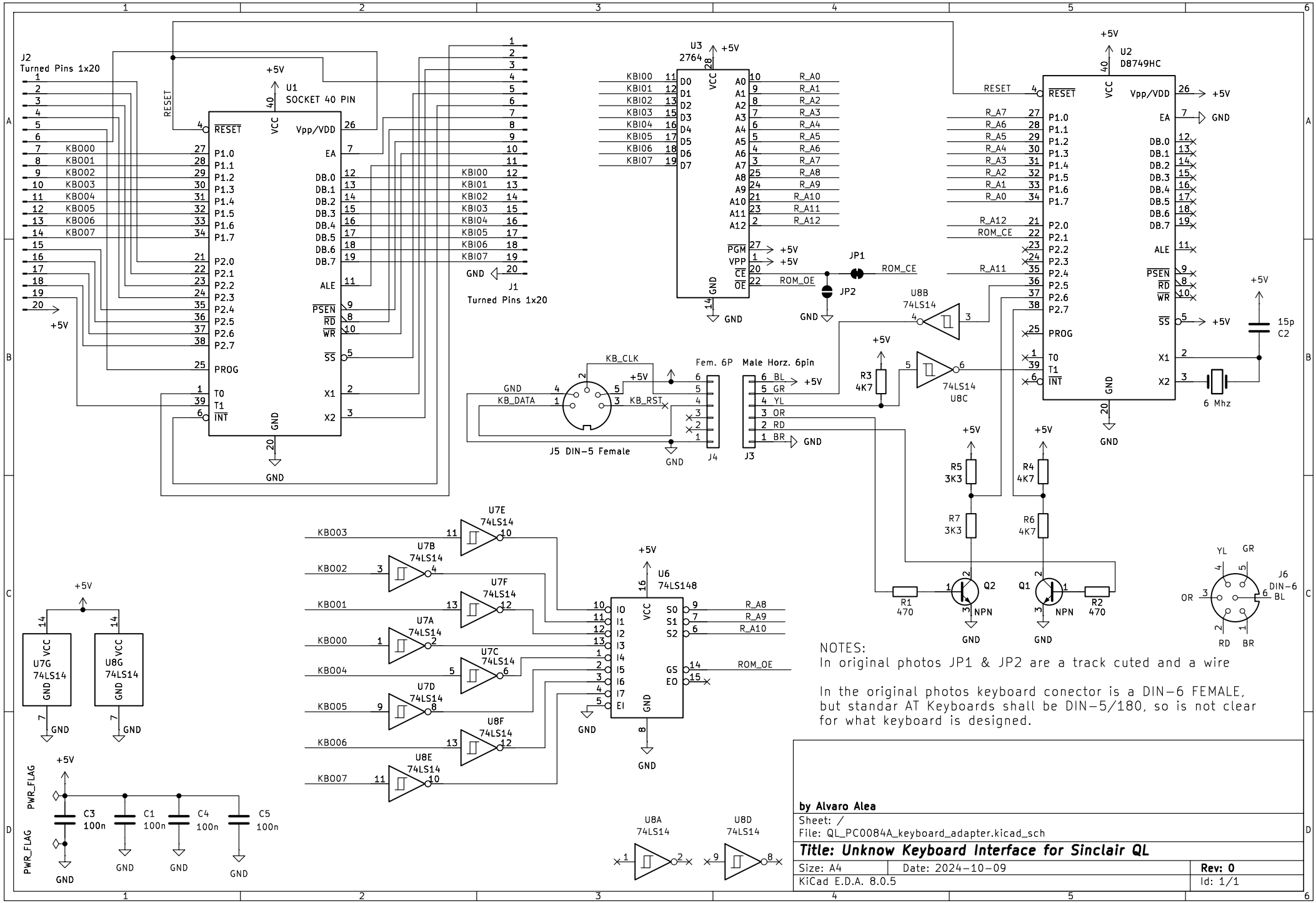


NOTES:
In original photos JP1 & JP2 are a track cuted and a wire

In the original photos keyboard conector is a DIN-6 FEMALE, but standar AT Keyboards shall be DIN-5/180, so is not clear for what keyboard is designed.

**by Alvaro Alea**

Sheet: /
File: QL_PC0084A_keyboard_adapter.kicad_sch

***Title: Unknow Keyboard Interface for Sinclair QL***

| | | |
|---|---|---|
| Size: A4 | Date: 2024-10-09 | **Rev: 0** |
| KiCad E.D.A. 8.0.5 | | Id: 1/1 |