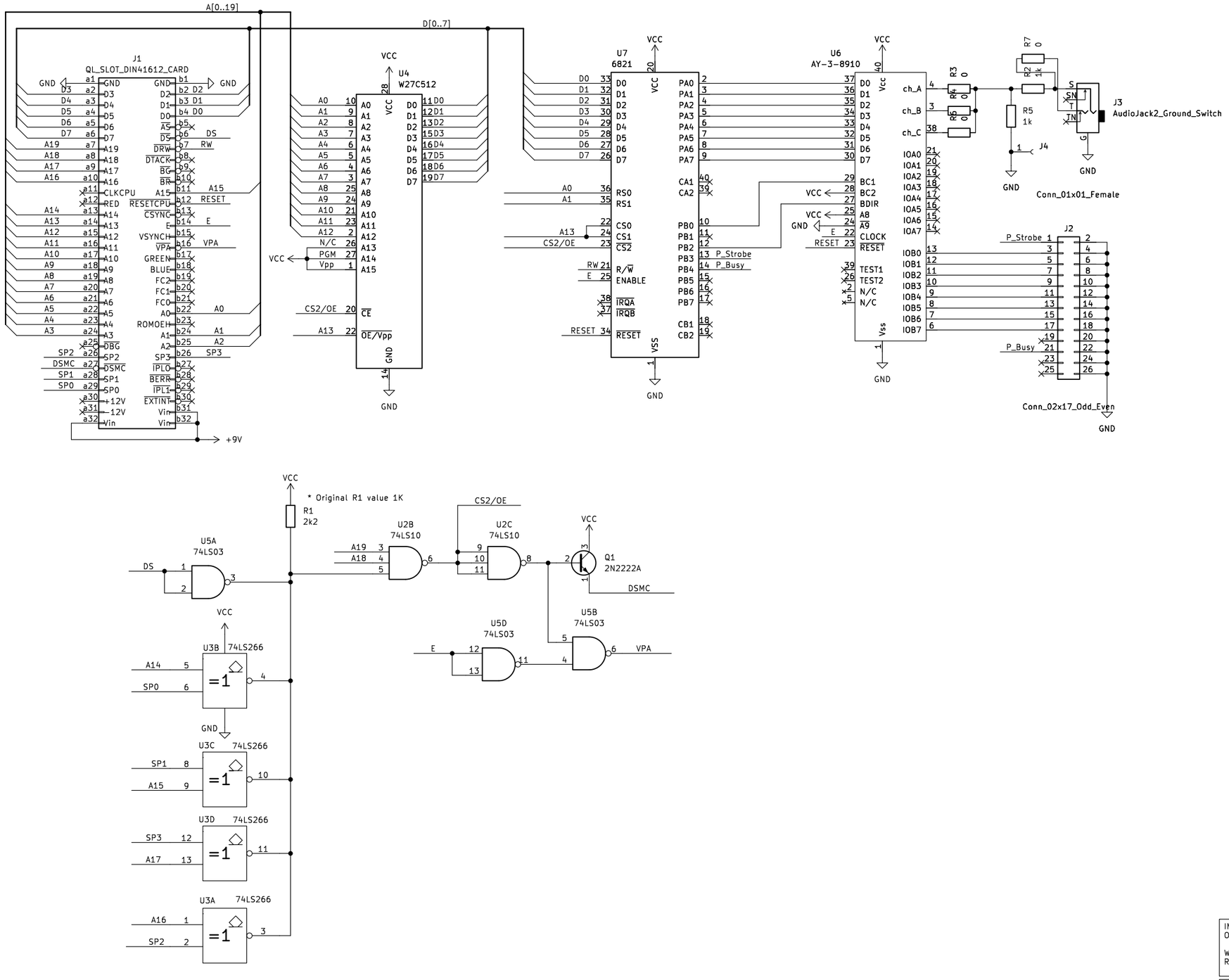

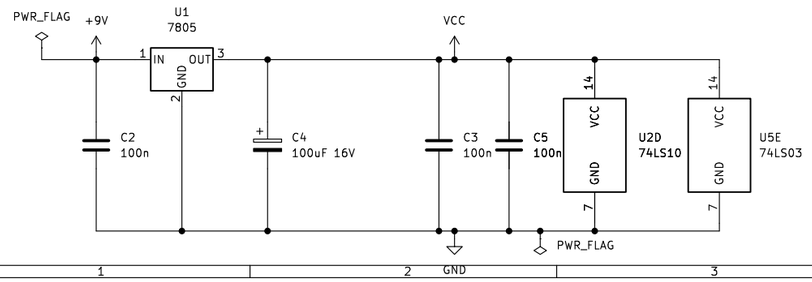

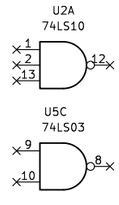

IMPORTANT NOTE:
Original ROM (U4) is 27C64A 8kB EPROM, U.V. erasable.

W27C512 is a EEPROM (no need U.V. light) compatible chip, it has 64Kb, if use, you should burn the ROM code in the upper 8Kb of the chip.

NOTE:
Original Q2 is 2N2222A.

2N2369 is recomended as it improve compatibility with some ZX8301.

Alvaro Alea Fdz

Sheet: /
File: QL_Qsound10x10.kicad_sch

Title: QSound/Qprint Interface for Sinclair QL

Size: A3	Date: 2023-12-26	**Rev: 0.1b**
KiCad E.D.A. 8.0.3		Id: 1/1