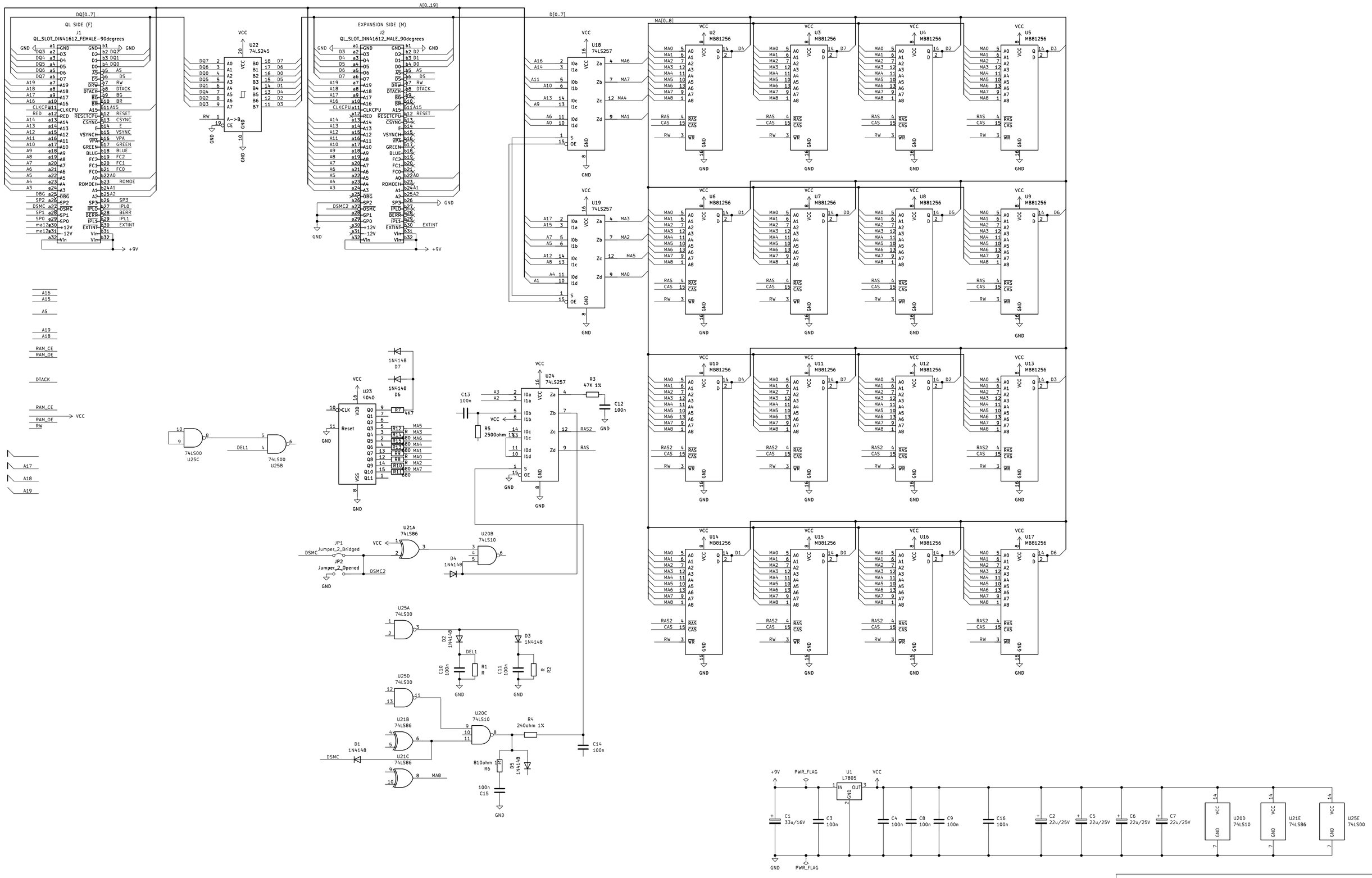

Under License
CERN Open Hardware Licence Version 2 – Strongly Reciprocal
https://ohwr.org/cern_ohl_s_v2.txt
(C) 2026 Alvaro Alea Fdz

Sheet: /
File: QL_Miracle_Trump_RAM.kicad_sch

Title: Miracle ExpandRam 512Kb for Sinclair QL

Size: A2	Date: 2026-03-22	**Rev: 3**
KiCad E.D.A. 9.0.2		Id: 1/1