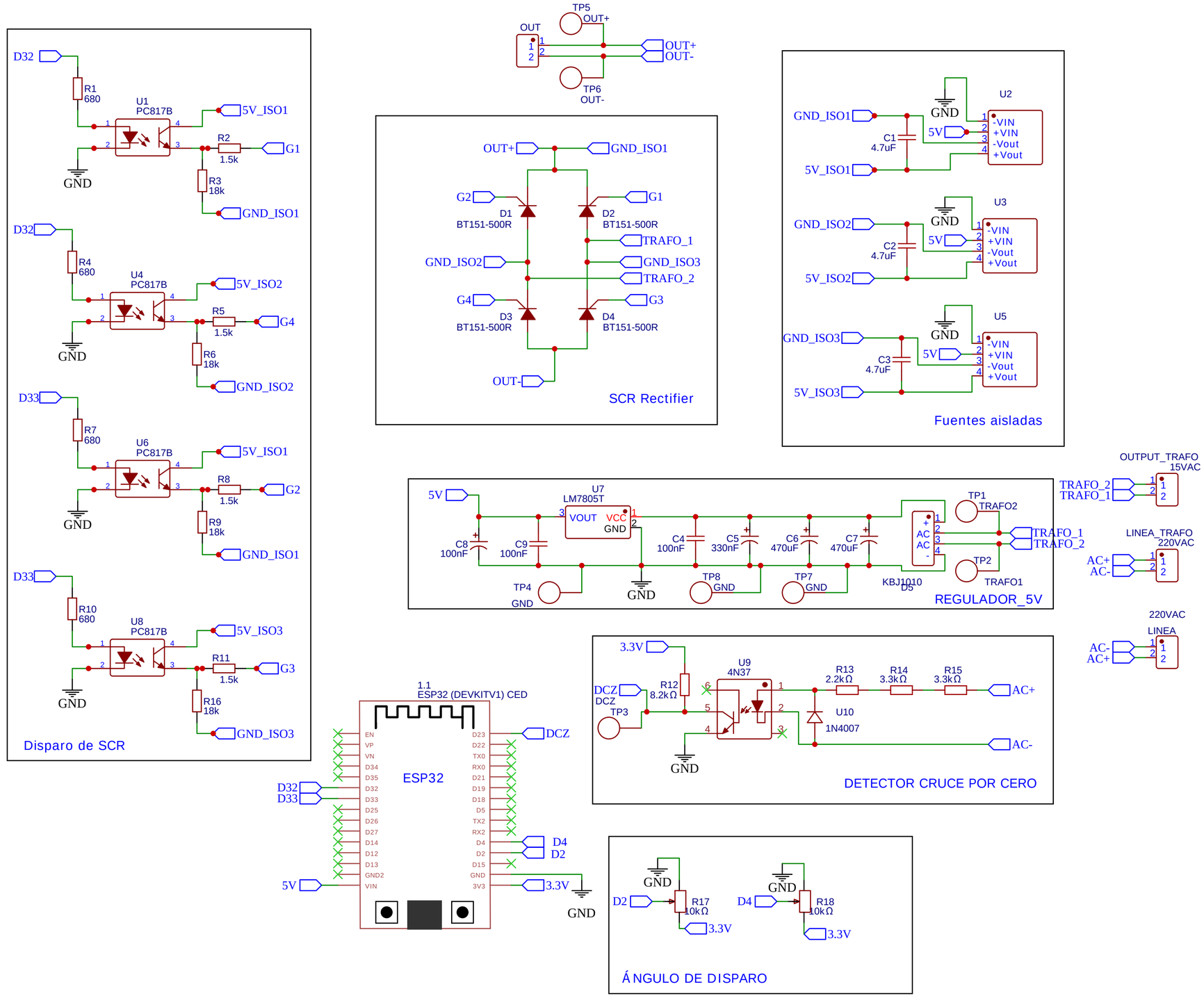

TITLE: Etapa de potencia	REV: 1.0
Company: Your Company	Sheet: 1/1
Date: 2024-12-05 Drawn By: syabar	