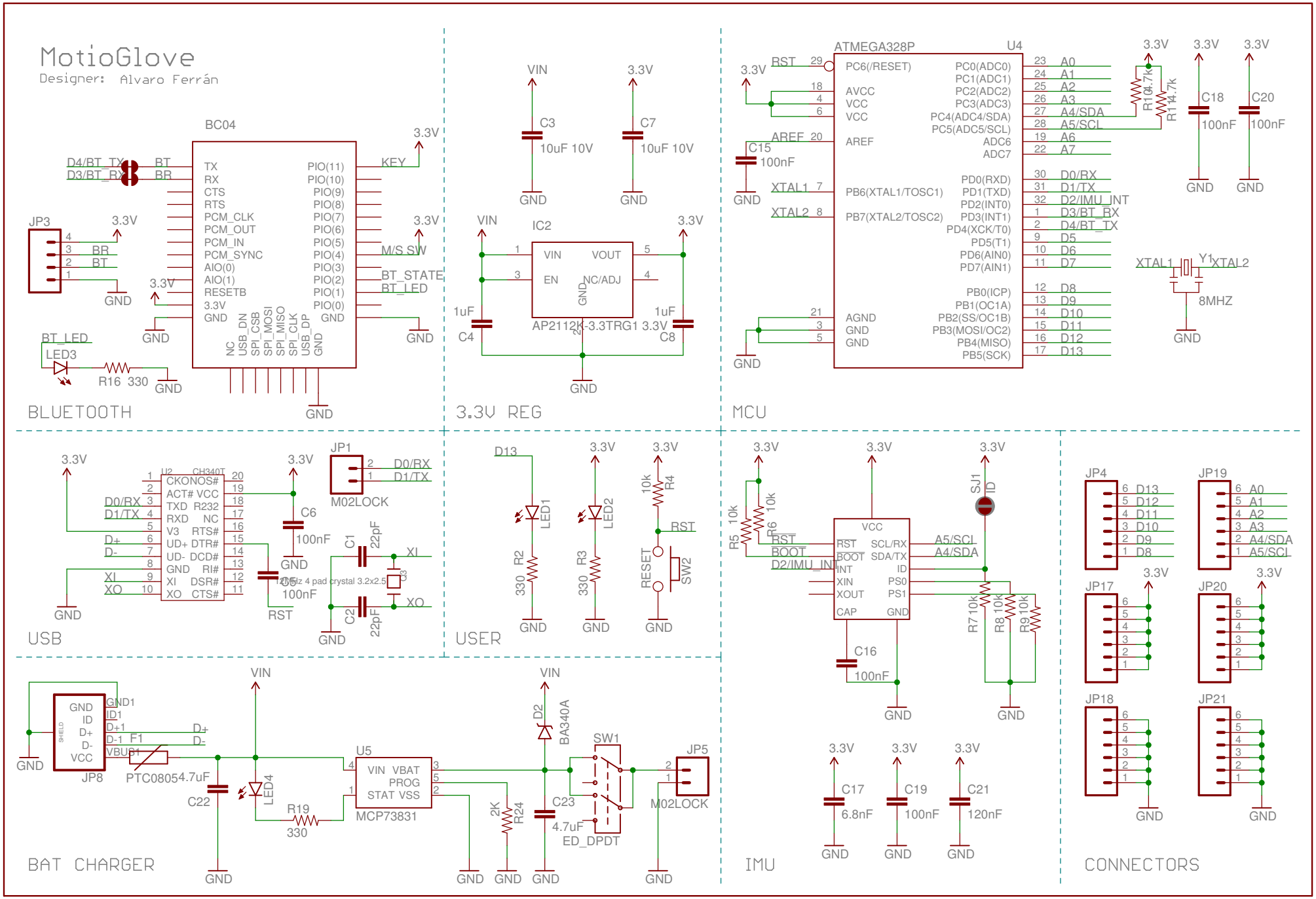
MotioGlove
Designer: Alvaro Ferrán
BC04
D4/BT_TX
D3/BT_RX
BT
BR
TX
RX
CTS
RTS
PCM_CLK
PCM_OUT
PCM_IN
PCM_SYNC
AIO(0)
AIO(1)
RESETB
3.3V
GND
PIO(11)
PIO(10)
PIO(9)
PIO(8)
PIO(7)
PIO(6)
PIO(5)
PIO(4)
PIO(3)
PIO(2)
PIO(1)
PIO(0)
KEY
M/S SW
BT_STATE
BT_LED
NC
USB_DN
SPI_CSB
SPI_MOSI
SPI_MISO
SPI_CLK
USB_DP
JP3
BR
BT
BT_LED
LED3
R16 330
BLUETOOTH
VIN
C3
10uF 10V
C7
10uF 10V
IC2
VIN
VOUT
EN
NC/ADJ
AP2112K-3.3TRG1
1uF
C4
C8
3.3V REG
ATMEGA328P
U4
RST
AREF
C15
100nF
XTAL1
XTAL2
PC6(/RESET)
AVCC
VCC
AREF
PB6(XTAL1/TOSC1)
PB7(XTAL2/TOSC2)
AGND
PC0(ADC0)
PC1(ADC1)
PC2(ADC2)
PC3(ADC3)
PC4(ADC4/SDA)
PC5(ADC5/SCL)
ADC6
ADC7
PD0(RXD)
PD1(TXD)
PD2(INT0)
PD3(INT1)
PD4(XCK/T0)
PD5(T1)
PD6(AIN0)
PD7(AIN1)
PB0(ICP)
PB1(OC1A)
PB2(SS/OC1B)
PB3(MOSI/OC2)
PB4(MISO)
PB5(SCK)
A0
A1
A2
A3
A4/SDA
A5/SCL
A6
A7
D0/RX
D1/TX
D2/IMU_INT
D3/BT_RX
D4/BT_TX
D5
D6
D7
D8
D9
D10
D11
D12
D13
R10 4.7k
R11 4.7k
C18
100nF
C20
100nF
Y1
8MHZ
MCU
JP1
D0/RX
D1/TX
M02LOCK
U2
CH340T
CKONOS#
ACT# VCC
TXD R232
RXD NC
V3 RTS#
UD+ DTR#
UD- DCD#
GND RI#
XI DSR#
XO CTS#
D+
D-
XI
XO
C6
100nF
C5
100nF
C1
22pF
C2
22pF
12MHz 4 pad crystal 3.2x2.5
C3
USB
D13
LED1
LED2
R2
330
R3
330
10k
R4
RST
RESET
SW2
USER
SJ1
ID
R5 10k
R6 10k
VCC
RST
BOOT
INT
XIN
XOUT
CAP
SCL/RX
SDA/TX
ID
PS0
PS1
GND
A5/SCL
A4/SDA
D2/IMU_INT
C16
100nF
R7 10k
R8 10k
R9 10k
C17
6.8nF
C19
100nF
C21
120nF
IMU
JP4
JP19
JP17
JP20
JP18
JP21
CONNECTORS
JP8
GND
ID
D+
D-
VCC
GND1
ID1
D+1
D-1
VBUS1
F1
PTC08054.7uF
C22
LED4
R19
330
U5
VIN
VBAT
PROG
STAT
VSS
MCP73831
D2
BA340A
SW1
JP5
M02LOCK
2K
R24
C23
4.7uF
ED_DPDT
BAT CHARGER

MOTION
GLOVE
BT
RESET
S
V
G
S
V
G
S
V
G
S
V
G