Harley-Davidson

SERVICE MANUAL 1978

Sportster
XL/XLH/XLCH/XLT-1000

1970 to

PART NO. 99484-78

FOREWORD

This service and repair manual has been prepared with two purposes in mind. First, it will acquaint the reader with the construction of the Harley-Davidson product and assist him in performing basic maintenance and repair. Secondly, it will introduce to the professional Harley-Davidson mechanic the latest field-tested and factory-approved major repair methods. We sincerely believe that this manual will make your association with Harley-Davidson products more pleasant and profitable.

HOW TO USE YOUR SERVICE MANUAL

Your Service Manual is arranged for quick, easy reference. This manual is divided into numbered sections entitled "Chassis," "Engine" and "Transmission." Sections are then divided into sub-sections. The Engine Section, for example, is comprised of "Cylinder" and "Crankcase" sub-sections.

Use this manual as follows:

1. Check the Table of Contents located in the front of each section to find subject desired.

2. Page number is listed across from subject.

3. Each section is printed with section number for quick general location of subject. Page number consists of section number and page number.

Information is presented in a definite order as follows:

Minor adjustments
Minor maintenance or repair
Complete disassembly
Cleaning
Major maintenance or repair
Assembly

In figure legends the number following a name of a part indicates the quantity necessary for one complete assembly.

All information for servicing a part should be read *before* repair work is started to avoid needless disassembly.

SERVICE BULLETINS

In addition to the information given in this Service Manual, Service Bulletins are issued to Harley-Davidson Dealers from time to time, which cover interim engineering changes and supplementary information. Service Bulletins should be consulted for complete information on the models covered in this manual.

USE GENUINE REPLACEMENT PARTS

To ensure a satisfactory and lasting repair job, follow the manual instructions carefully and use only genuine Harley-Davidson replacement parts.

This is your insurance that the parts you are using will fit right, operate properly and last longer. When you use genuine Harley-Davidson parts you use the best.

WARNING — Gasoline is extremely flammable and highly explosive under certain conditions. always stop engine, and do not smoke or allow open flame or sparks when refueling or servicing the fuel system, or when using gasoline as a cleaning solvent where specified in this manual.

Harley-Davidson products are manufactured under one or more of the following patents: U.S. Patents — 2986162, 2987934, 2998809, 3116089, 3144631, 3144860, 3226994, 3229792, 3434887, 3559773, Des. 225,626.

1970-78 SPORTSTER

XL/XLH/ XLCH/XLT-1000

SERVICE MANUAL

PRODUCT 1

CHASSIS 2

ENGINE 3

TRANSMISSION 4

ELECTRICAL 5

MISCELLANEOUS 6

The maintenance and repair information in this manual applies to the 1970-72 Sportster Models XLH, XLCH, the 1976 XLT and the 1973-78 XL/XLH/XLCH.

COPYRIGHT 1978 BY HARLEY-DAVIDSON MOTOR CO., INC. ALL RIGHTS RESERVED

HG-5M-2/85

TABLE OF CONTENTS

	Page Number
PRODUCT	
SPECIFICATIONS	
Dimensions	1-1
Capacities	1-1
Engine	1-1
Transmission	1-1
Tire Data	1-1
SERVICE	
Servicing a New Motorcycle	1-3
Recommended Operations at First 500 and 1,000 Miles	1-3
Regular Service Intervals	1-4
Lubricants	1-5
TORQUE REQUIREMENTS	
Fastener Tightening	1-13
LOCATING TROUBLES	
Engine	1-15
Lubrication System	1-16
Electrical System	1-16
Carburetor	1-16
Transmission	1-16
Clutch	1-16
Brake	1-17
CHASSIS	
DRIVE	
Front Chain	2-1
Adjustment	2-1
Lubrication	2-2
Replacing	2-2
Rear Chain	2-2
Adjustment	2-2
Rear Chain Oiler	2-2
Servicing Rear Chain	2-3
WHEELS	
Service Chart	2-5
Removing and Installing Wheels	2-5
Hubs	2-7
Sprocket Replacement	2-10
Spoking Wheels	2-11
Truing Wheels	2-13
Truing Rim	2-13
Removing Tire and Tube from Rim	2-14
Mounting Tire and Tube on Rim	2-14
Checking Tire Trueness	2-15
Aligning Wheels	2-16
HANDLEBAR THROTTLE CONTROL	
Spiral Type	2-17
Disassembling	2-17
Assembling	2-17
Drum Type	2-18
Disassembling and Assembling	2-18
FRAME	2-19
FORKS	
Front Fork	2-21
Servicing	2-21
Disassembling and Repair	2-24
Assembly	2-30
Rear Shock Absorber	2-31
Rear Fork	2-32
BRAKES	
Servicing	2-35
Adjusting Front Wheel Brake	2-35
Adjusting Rear Wheel Brake	2-35
Replacing Front Wheel Brake Cable	2-36
Disassembling Brakes	2-36
Inspecting and Repairing Brakes	2-36
Assembling Brakes	2-37
Cross Shaft	2-37
Rear Brake Foot Pedal (1977 & Later)	2-38
Front Disc Brake (1973 & Later)	2-40
Check List	2-41
1973 Front Disc Brake	2-42
Disassembling and Reassembling	2-42
1974 and Later Front Disc Brake	2-43
Front Brake Master Cylinder	2-45
Bleeding Hydraulic System	2-46
FIBERGLASS BODY CARE AND REPAIR	
General	2-47
Surface Finishing	2-47
Molded-in-Color Surface Repairs	2-48
Patching of Holes, Punctures and Breaks	2-49
TOOLS	2-53
ENGINE	
GENERAL	
Specifications	3-1
Description	3-1
Lubrication	3-2
Repair Procedure	3-7
CYLINDER HEAD	
Removing	3-11
Disassembling	3-11
Cleaning and Inspecting	3-11
Repair Rocker Arm and Bushings	3-13
Refacing Valves and Valve Seats	3-13
Assembling Cylinder Head	3-14
Adjusting Tappets	3-15
Removing and Installing Push Rods Only	3-15
CYLINDER AND PISTON	
Removing	3-17
Cleaning and Inspecting	3-17
Refinishing Cylinders	3-17
Fitting Piston Rings	3-19
Connecting Rod Bushing	3-20
Straightening Connecting Rods	3-20
Assembling Cylinder and Piston	3-21
GEARCASE	
Oil Pump	3-23
Check Valve	3-23
Cleaning and Inspecting Oil Pump	3-24
Assembling Oil Pump	3-25
Disassembling Oil Pump	3-25
Valve Tappets and Guides	3-28
Gearcase Cover and Timing Gears	3-30
Disassembling	3-30
Cleaning and Inspecting	3-31
Bearing Replacement	3-31
Assembling	3-32
CRANKCASE	
General	3-35
Disassembling Crankcase	3-35
Flywheels	3-37
Assembling Crankcase	3-42
FUEL SYSTEM	
Carburetor (Tillotson)	3-45
Description	3-45
Operation	3-45
Adjusting	3-48
Inspecting and Testing	3-49
Disassembling	3-51
Cleaning, Inspecting, and Repairing	3-51
Assembling	3-53
Troubleshooting Guide	3-53

TABLE OF CONTENTS (cont'd)

	Page Number
Carburetor (Bendix)	3-54
Operation	3-54
Adjusting	3-55
Disassembling	3-56
Cleaning and Inspection	3-56
Assembling	3-58
Carburetor (Keihin)	3-58
Operation	3-58
Adjusting	3-61
Disassembling	3-61
Cleaning and Inspecting	3-62
Assembling	3-62
Installing	3-62
Troubleshooting Chart	3-64
Air Cleaner	3-66
Fuel Tank	3-66
Fuel Supply Valve	3-66
TOOLS	3-69

TRANSMISSION

	Page Number
GENERAL	
Specifications	4-1
Description	4-1
CLUTCH	
Diagnosis Chart	4-3
1970 Clutch Controls	4-3
Adjusting Clutch Release Mechanism	4-3
Adjusting Clutch Spring Tension	4-3
Replacing Clutch Control Cable and Coil	4-4
Disassembling Clutch Release Mechanism	4-4
Inspecting Clutch Release Mechanism	4-5
Assembling Clutch Release Mechanism	4-5
1971 and Later Clutch Controls	4-6
Adjusting Clutch Release Mechanism	4-6
Adjusting Clutch Spring Tension	4-6
Disassembling Clutch Release Mechanism and Clutch Cable	4-6
Inspecting and Repairing Clutch Release Mechanism and Clutch Cable	4-6
Assembling Clutch Release Mechanism and Clutch Cable	4-8
1970 Clutch	4-8
Disassembling	4-8
Inspecting and Repairing	4-8
Replacing Clutch Sprocket Needle Bearing and Starter Clutch	4-9
Assembling Clutch	4-9
1971 and Later Clutch	4-11
Disassembling	4-11
Inspecting and Repairing	4-11
Assembling Clutch	4-14
Compensating Sprocket	4-15
KICK STARTER	
General	4-17
Disassembling	4-17
Inspecting and Repair	4-18
Assembling	4-18
ELECTRIC STARTER	
Starter Drive	4-21
Disassembling Solenoid	4-21
Disassembling Starter Drive Shaft and Housing	4-22
Assembling Starter and Solenoid	4-22
TRANSMISSION	
General	4-23
1975 and 1976 Shifter Linkage	4-23
Removing Transmission	4-24
Inspecting and Replacing Parts	4-25
Assembling Transmission	4-28
Lubrication	4-30
TOOLS	4-31

ELECTRICAL

	Page Number
WIRING	
Wiring Diagrams	
1970-71 XLH	5-3
1970-71 XLCH	5-5
1972 XLH Std. Seat	5-5
1972 XLCH Std. Seat	5-6
1972 XLH Low Seat	5-7
1972 XLCH Low Seat	5-7
1973-74 XL	5-9
1973-74 XLCH	5-9
1975 & 1976 XL	5-11
1975 & 1976 XLCH	5-11
1977 XL	5-13
1977 XLCH	5-13
1978 XL	5-15
1978 XLCH	5-15
SWITCHES	
Button	5-17
Solenoid Switch	5-18
Stop Lamp Front Brake Switch	5-18
Starter Relay Switch	5-19
LAMPS	
Headlamp	5-21
Adjusting Beam	5-21
Bulb Chart	5-21
GENERATOR	
Checking, Testing and Repair	5-23
Brushes	5-23
Field Coils	5-23
Armature	5-25
Commutator	5-26
Disassembling	5-27
Assembling	5-28
CIRCUIT BREAKER	
Description	5-29
Operation	5-29
Troubleshooting	5-29
Adjusting Points	5-29
Ignition Timing	5-30
Disassembling and Assembling	5-31
Installing Circuit Breaker	5-33
Disassembling and Assembling 1971 & Later Models	5-33
IGNITION COIL	
Troubleshooting	5-37
Replacing Cables	5-37
SPARK PLUGS	
Removing Plugs	5-39
Cleaning, Inspecting and Repair	5-39
Setting Spark Gap	5-40
Testing Spark Plugs	5-40
Installing Spark Plugs	5-40
REGULATOR – 1977 & EARLIER	
Tests	5-41
Test Specifications	5-41
Testing Method I (Model XLH)	5-42
Testing Method I (Model XLCH)	5-43

TABLE OF CONTENTS (cont'd)

	Page Number
Testing Method II (Model XLH)	5-44
Testing Method II (Model XLCH)	5-45
Servicing	5-47
REGULATOR – 1978	
General	5-49
Checking Charging System	5-49
BATTERY	
Care	5-53
Testing	5-53
Charging	5-54
HORN	5-55
STARTER MOTOR	
Troubleshooting	5-57
Starter Motor and Drive	5-57
Prestolite Starter Motor	5-58
Hitachi Starter Motor	5-58
Prestolite and Hitachi Starter Motors	5-60
TOOLS	5-61

MISCELLANEOUS

	Page Number
INSTRUMENTS	
Speedometer	6-1
Tachometer	6-1

PRODUCT 1

TABLE OF CONTENTS

	PAGE
General	1-1
Service	1-3
Locating Troubles	1-15

PECIFICATIONS

DIMENSIONS

		XL, XLH	XLCH
Wheel Base		58-1/2"	58-1/2"
Overall Length	1970-76	87-1/4"	87-1/4"
	1977 & later	87-3/4"	87-3/4"
Overall Width	1970-76	33"	32"
	1977 & later	35"	35"
Overall Height	1970-76	40-1/2"	42"
	1977 & later	48"	48"
Road Clearance	1970-72	6-3/4"	6-1/2"
	1973-77	7-1/4"	7-1/4"

CAPACITIES

	XL, XLH	XLCH
Gasoline Tank (U.S. Gallons)	4.0 or 2.2	4.0 or 2.2
Reserve	.25	.25
Oil Tank (Quarts)	3	3
Transmission (Pints)	1-1/2	1-1/2

ENGINE

Model Designation Letters ..... XL, XLH, XLCH
Type of Engine ..... 4 Cycle OHV
Number of Cylinders 2
Placement of Cylinders ..... 45 Degree, V Type
Horsepower: 1970-71 ..... 58 hp at 6800 rpm
1972-77 ..... 61 hp at 6200 rpm
1978 ..... 59.5 hp at 6400 rpm
Taxable Horsepower 7.2
Bore: 1970-71 ..... 3.00 in. (76.2 mm)
1972 & later ..... 3.188 in. (81 mm)
Stroke ..... 3.8125 in. (96.8 mm)
Piston Displacement:
1970-71 ..... 53.9 cu. in. (883 cc)
1972 & later ..... 60.9 cu. in. (997.5 cc)
Torque ..... 52 lb-ft at 3800 rpm
Compression Ratio ..... 9.0 to 1
Spark Plugs (for break-in period) ..... No. 4

After break-in period, No. 5 plug is recommended for average and hard service.

The Vehicle Identification Number (V.I.N.) is stamped on the right side of the engine crankcase and on the frame steering head. It consists of a model code, a serial number, a manufacturer's identification and model year as shown in the table.

Letters	Model No.	Serial No.	Mfgr.	Year
XL or XLH XLCH XLA XLT	3A 4A 4D 2G	10,000 and up (5 digits)	H Harley-Davidson	8 (1978)

Always give this number when ordering parts or making an inquiry.

TRANSMISSION

Type ..... Constant Mesh - Foot Shift
Speeds ..... 4 Forward

Number of Sprocket Teeth:	XL, XLH, XLCH 1973 & Later	XL, XLH, XLCH 1970-73	1970-71 XLCH Only
Engine	34	34	34
Clutch	59	59	59
Transmission	21	20	19
Rear Wheel	51	51	51
Gear Ratios:			
First (Low) Gear	10.63	11.16	11.74
Second Gear	7.70	8.08	8.50
Third Gear	5.82	6.11	6.43
Fourth (High) Gear	4.22	4.42	4.66

TIRE DATA

SPORTSTER TIRE CHART

Wheel	Wheel Description	Tire Size
19 Inch	Laced	3.75-19T
XLH/XLCH/XLT Front	Cast, 7 Spoke Cast, 9 Spoke	MJ90-19
18 Inch	Laced	4.25-18T
XLH/XLCH/XLT Rear	Cast, 7 Spoke Cast, 9 Spoke	MN90-18
16 Inch XLH/XLCH Rear (Accessory)	Cast, 7 Spoke	MT90-16T 5.00-16T 5.10-16T

WARNING — These tires have been specified to provide maximum handling stability and must be used exclusively for replacement.

Tire Size ..... Front – MM90-19T (3.75 x 19T)
Rear – 4.25 x 18T
Pressure ..... Front – 24 lbs.
Rear – 30 lbs.

WARNING — Maximum pressure of either tire is 32 lbs.

IMPORTANT

Either Goodyear or Yokohama tires are supplied as original equipment and are identified according to the chart on page 1-1. Innertubes are identified with manufacturers corresponding size numbers. These tires were specially designed to provide maximum roadability. These special tires must be used exclusively for replacement. Tires will fit only taper base rims. On the XLT model, use only Yokohoma's Y-980 for the front and Y-622 for the rear tire.

The tire inflation pressures given are based on a rider weighing approximately 150 lbs. When this load is exceeded by 50 lbs. or more, increase tire pressure as follows: for each 50 lbs. of overload, increase pressure of rear tire 2 lbs. and front tire 1 lb.

SERVICE

SERVICING A NEW MOTORCYCLE

PRE-DELIVERY

Service operations to be performed before delivery to customer are specified in the Setting Up Instructions and Important Instructions included with new vehicle.

CHECK AT FIRST 500 MILES

1. Drain oil tank through drain plug, flush with kerosene and refill with fresh oil.
2. If motorcycle is equipped with oil filter, service the filter.
3. Drain transmission and front chain compartments, clean transmission magnetic drain plug, and refill with fresh oil. Use same grade oil used in engine. Reinstall plug. If an oil leak is noted, reinstall plug along with Seal Washer, Part No. 6370.
4. Lubricate all points indicated for 2000 mile servicing as described in the Regular Service Intervals Chart.
5. Inspect and service air cleaner if needed.
6. Check and adjust chains.
7. Check lubrication and condition of rear chain and adjust rear chain oiler if necessary.
8. Check all nuts, bolts and screws, and tighten any found loose to specified torque.
9. Check wheel mounting bolts which secure rear wheel to brake assembly. These bolts must be kept very tight. See torque chart.
10. Check battery solution level and add distilled water if needed. Make sure terminals are clean and connections tight.
11. Check tightness of all cylinder head bolts and all cylinder base nuts. See torque chart.
12. Check tappet adjustment and readjust if necessary.
13. Check spark plug electrodes, clean and regap if necessary.
14. Check ignition timing and circuit breaker point condition and gap.
15. Check wheel spokes and tighten if necessary.
16. Check front fork and rear fork bearing adjustment.
17. Check clutch adjustment.
18. Check brake adjustment.
19. Aim headlight.
20. Oil all control joints and parts as indicated in 2000 mile regular service intervals.
21. Check gasoline supply valve, lines, and fittings to be sure there are no leaks.
22. Check tire pressure and inspect tread.
23. Change front fork oil.
24. Check fluid level in master cylinder reservoir. Check brake lines and brake caliper for leaks.
25. Check carburetor controls and adjustment.
26. Inspect brake pad linings and brake discs for wear.
27. Check oil lines and fittings for leaks.
28. Road test.

CHECK AT FIRST 1000 MILES

1. Drain oil tank through drain plug and refill with fresh oil.
2. Clean oil filter (if applicable).
3. Check level of oil in transmission and front chain compartments and add oil if needed. Use same grade of oil used in engine.
4. Service air cleaner.
5. Check and adjust chains.
6. Check lubrication and condition of rear chain and adjust rear chain oiler if necessary.
7. Check battery solution level and add distilled water if needed. Make sure terminals are clean and connections tight.
8. Check tappet adjustment and readjust if necessary.
9. Check circuit breaker points and adjust if needed.
10. Check clutch adjustment.
11. Check brake adjustment.
12. Check tire pressure and inspect tread.
13. Check gasoline supply valve, lines, and fittings to be sure there are no leaks.
14. Check fluid level in master cylinder reservoir.
15. Check and tighten spokes.
16. Check carburetor controls and adjustment.
17. Lubricate all controls and fittings.
18. Inspect brake linings and discs.
19. Check all lines and brake system for leaks.
20. Check all fasteners (nuts, bolts, screws) and make sure they are tight. See torque chart.
21. Check tightness of cylinder base nuts and cylinder head bolts. See torque chart.
22. Road test.

All operations are fully described in subsequent sections.

REGULAR SERVICE INTERVALS

(Figures 1-1 through 1-7)

SUGGESTED OPERATIONS FOLLOWING THE INITIAL BREAK-IN PERIOD

Regular Service Interval	Index No.	Grease	Index No.	Oil	Index No.	Service
300 Miles			7	Rear Chain (Manual) (1977 & later)		
Every 1000 miles	31	Rear brake foot lever shaft	7	Rear chain (with oiler) (1976 & earlier)		Inspect tires
	16	Kick starter shaft	21	Clutch hand lever		Check spokes
	19	Rear brake lever at drum	1	Brake hand lever		Check oil lines and brake system for leaks
	11	Speedometer drive	22	Clutch control cable	4	Air cleaner
	12	Circuit breaker cam-shaft	37	Rear brake cable	25	Battery
			28	Throttle control cable	7	Rear chain adjust-ment
			17	Rear brake rod clevis	36	Gasoline valve, lines and fittings
						Check fastener tightness
					15	Clutch adjustment
					2,17	Brake adjustment
					30	Front chain adjust-ment
Every 2000 miles	8	Front brake shaft	9	Front brake cable clevis	13	Tappet adjustment
	31	Rear brake crossover shaft (1974 & earlier)	2	Front brake cable	5	Oil filter
	15	Clutch release worm (1970)	26	Seat post (saddle only)		Check carburetor controls
	14	Foot shift lever			20	Rear chain oiler (1976 & earlier)
	6	Seat bar roller and bolt			12	Circuit breaker points
	32	Rear wheel hub			35	Check brake fluid
	31	Foot shift crossover shaft (1975-76)			24	Inspect, clean and gap spark plugs
						Check fastener tightness
Every 5000 miles or 1 year (whichever comes first)	3	Throttle control spiral			10	Check front and rear fork bearing adjustment
	34	Speedometer and tachometer cables			18	
						Replace:
					24	Spark plugs
					5	Oil filter element
						Inspect tires
					12	Time ignition
						Clean gas tank strainer
					29	Check generator brushes
					33	Check shock rubber bushings
					23	Change front fork oil (1973 & later)
						Change brake fluid
Every 10,000 miles	18	Repack rear fork pivot bearings				
	27	Repack wheel bearings				
Weekly						Check tires
						Check battery

SERVICE INTERVAL ENGINE AND TRANSMISSION

	300 Miles	1000 Miles	2000 Miles	5000 Miles or 1 Year	Spring and Fall
Engine Oil	Check	Check	Change		Change
Transmission Oil		Check		Change	

LUBRICANTS TO USE

Use proper grade of oil for the lowest temperature expected before next oil change period as follows:

USE Harley-Davidson Oil	Use Grade	Air Temperature (Cold Engine Starting Conditions)
Medium Heavy	75	Above 40°F
Special Light	58	Below 40°F
Regular Heavy	105	Severe operating condition at high air temperatures above 90°F

HARLEY-DAVIDSON GREASE-ALL GREASE

Use for all bearings on motorcycles.

HARLEY-DAVISON CHAIN GREASE, CHAIN SAVER AND CHAIN SPRAY

Designed especially as chain lubricant. Penetrates inner bearings for long chain life.

GASOLINE

Use a good quality leaded "premium grade" gasoline (94 pump octane or higher). "Pump octane" is the octane number usually shown on the pump.

If leaded premium is not available, unleaded premium grade gasoline (94 pump octane or higher) is satisfactory, provided there is an occasional fill (every 3 or 4 tankfuls) with leaded premium.

Leaded or unleaded regular grade gasoline (lower than 94 pump octane) is not recommended.

BRAKE FLUID

Use D.O.T. 5 brake fluid only.

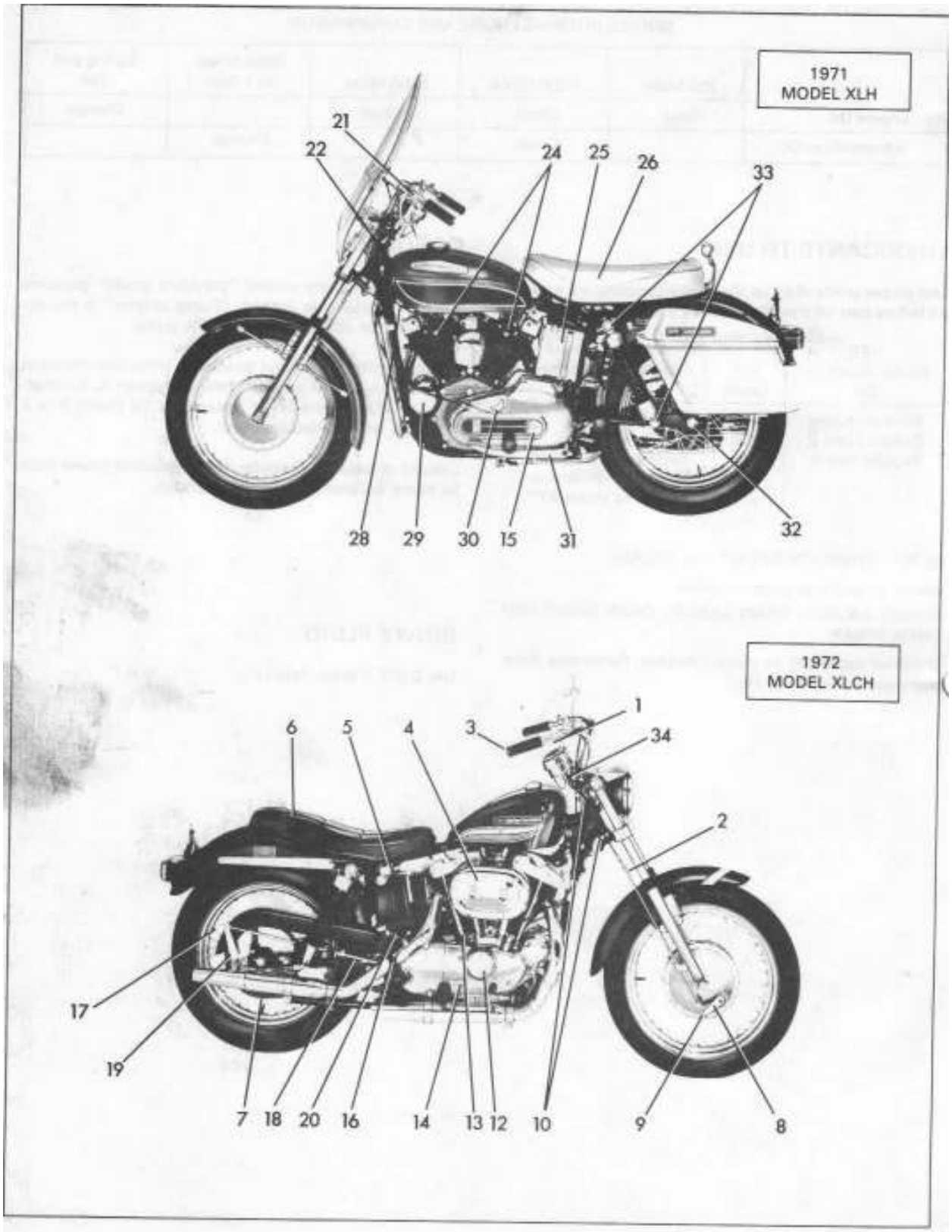

Figure 1-1. Service Chart

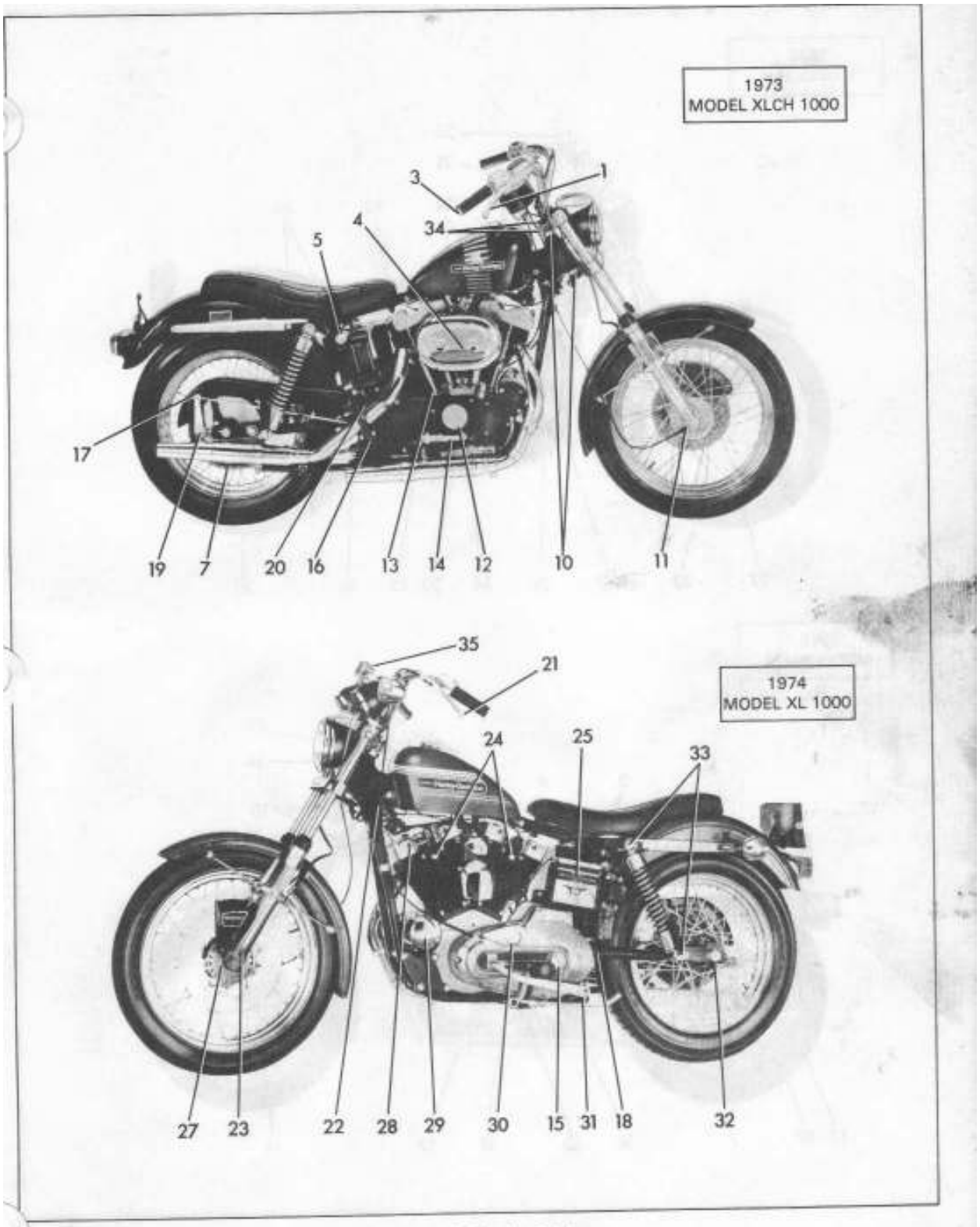

Figure 1-2. Service Chart

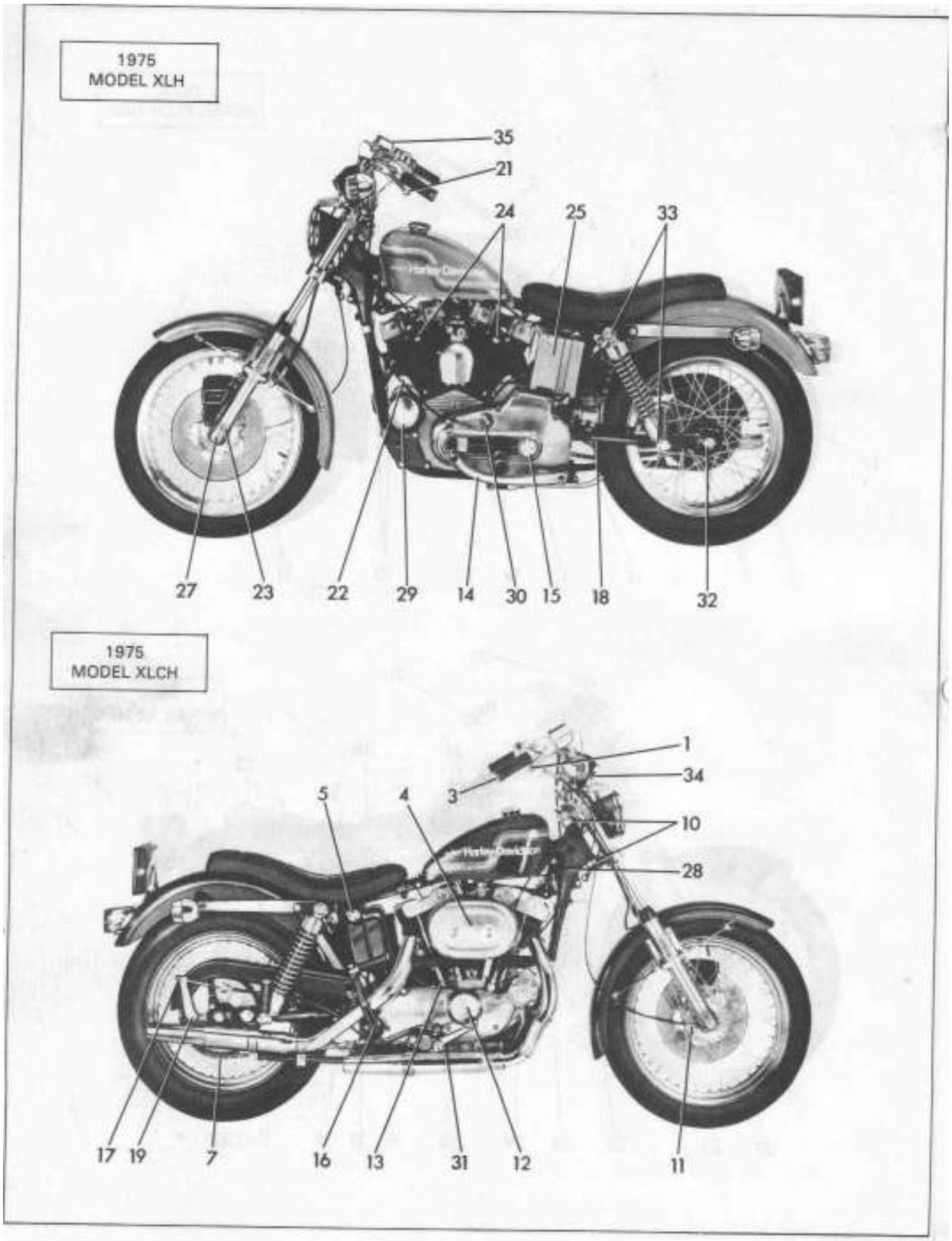

Figure 1-3. Service Chart

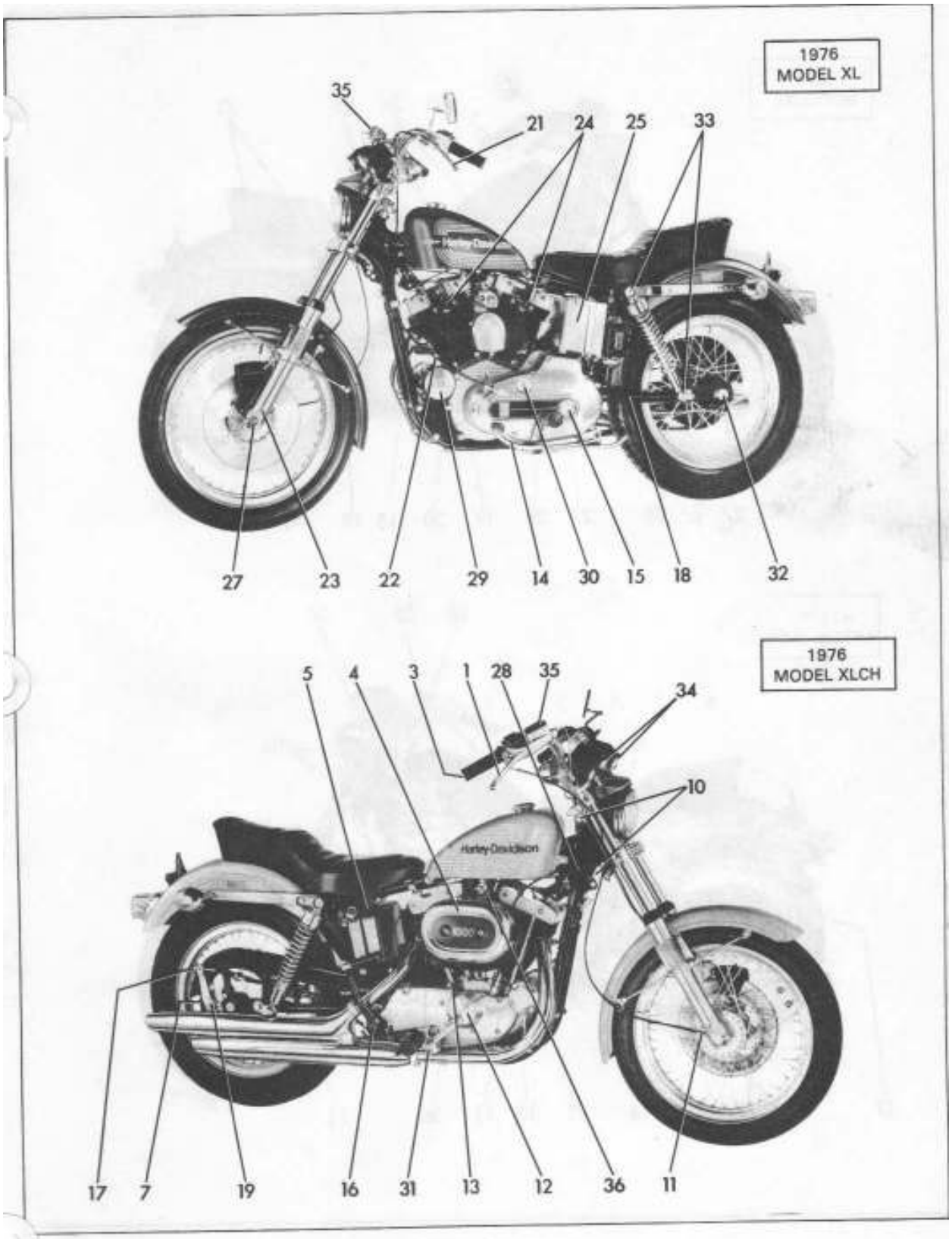

Figure 1-4. Service Chart

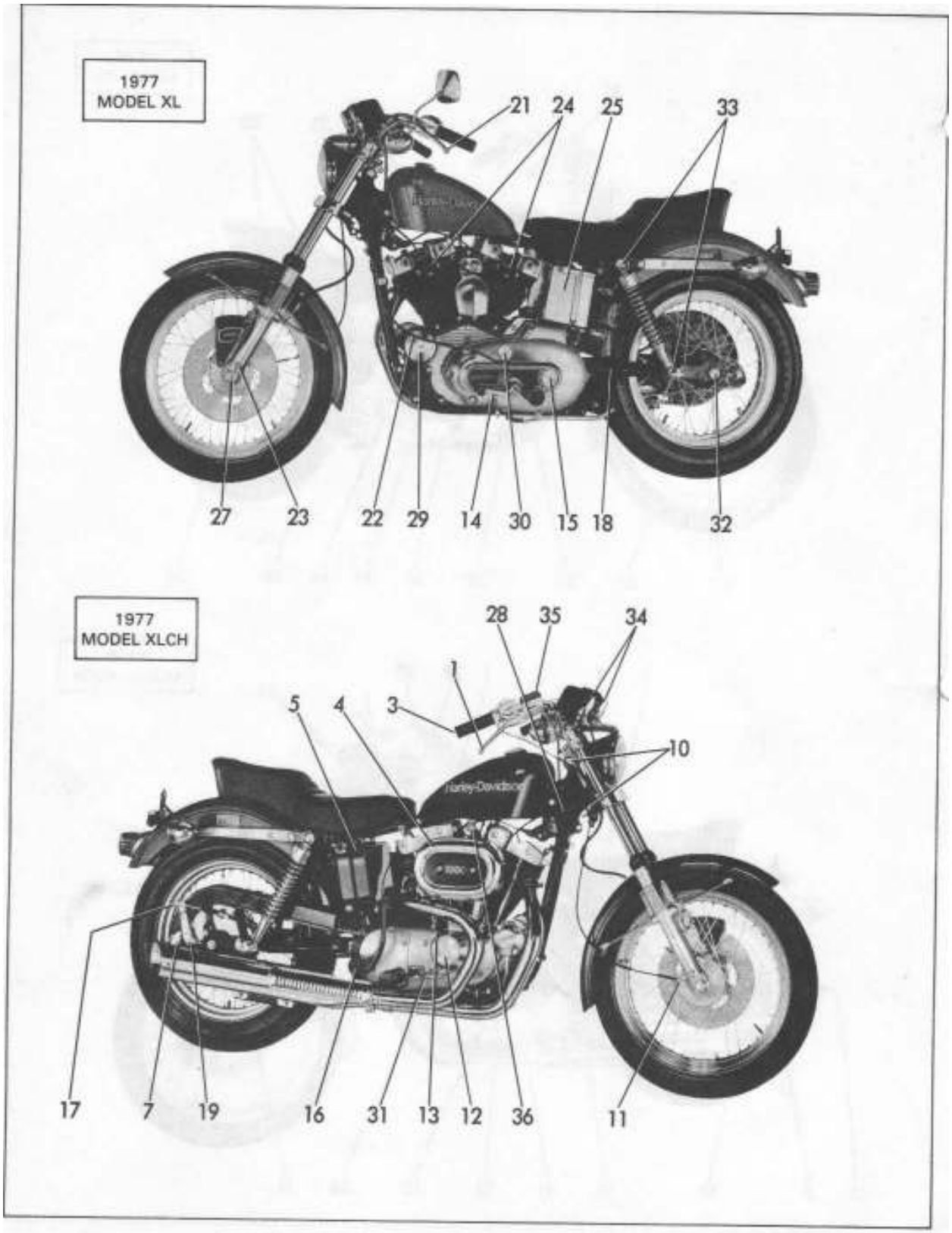

Figure 1-5. Service Chart

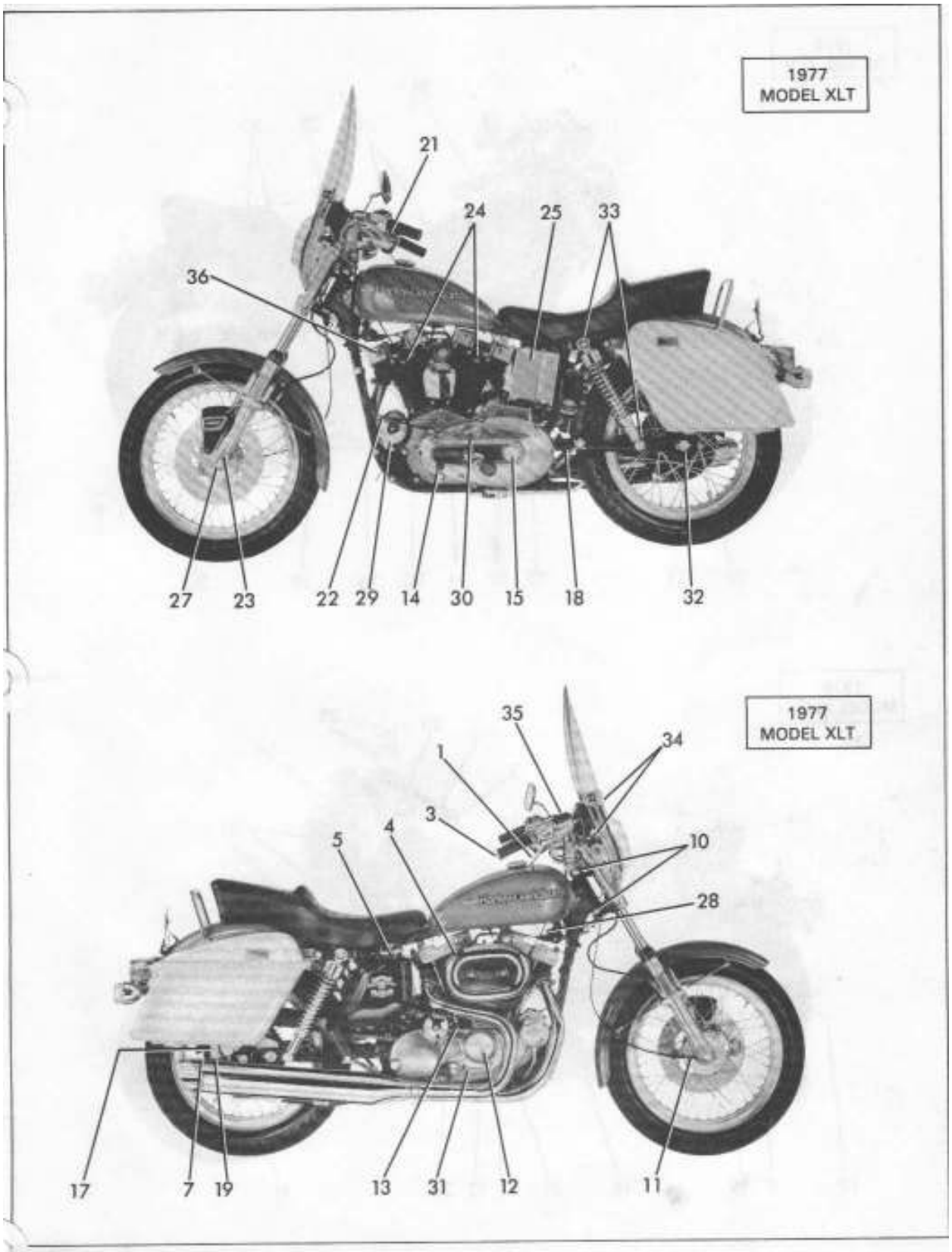

Figure 1-6. Service Chart

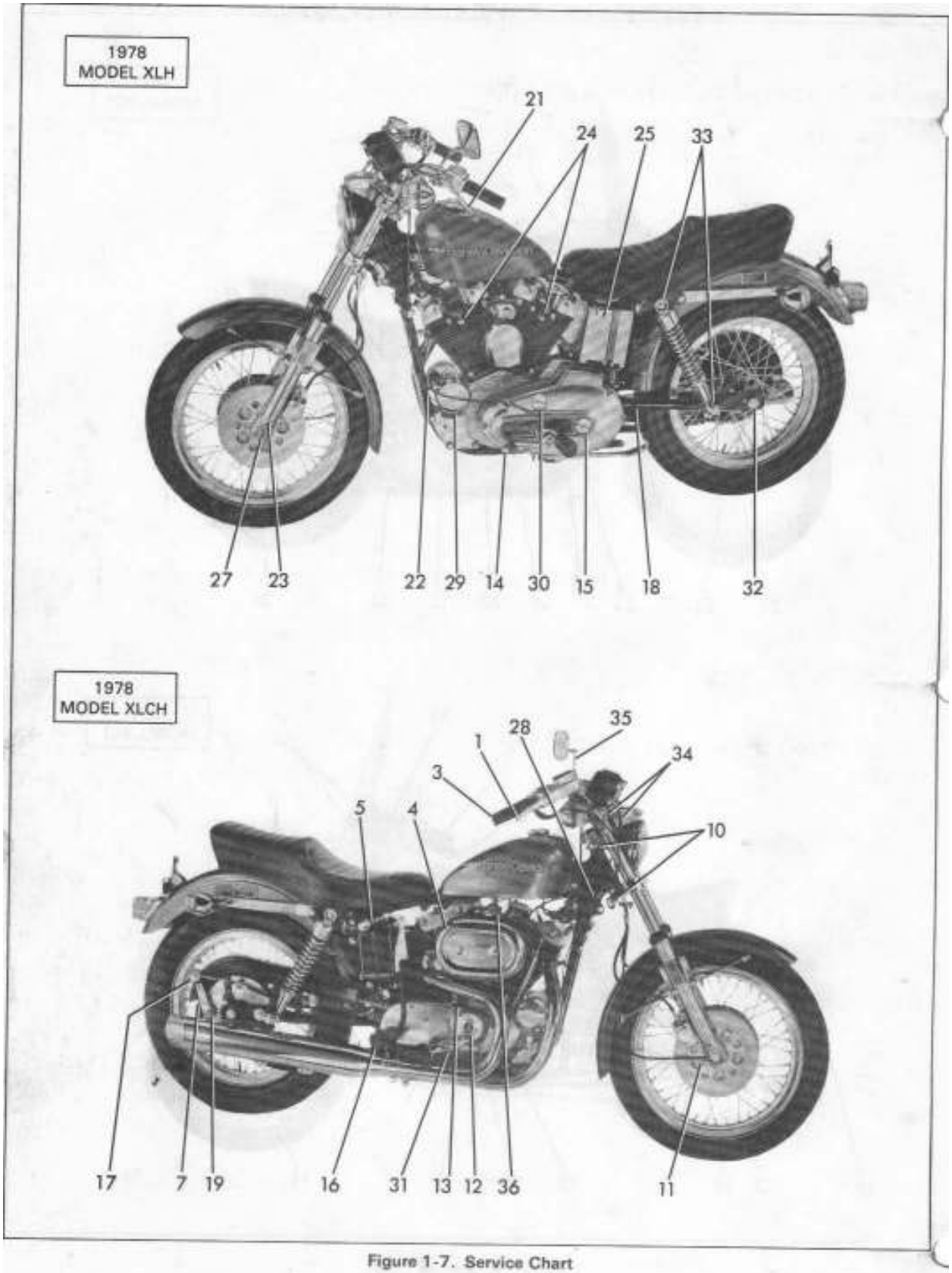

Figure 1-7. Service Chart

TORQUE REQUIREMENTS

GENERAL FASTENER TIGHTENING SPECIFICATIONS

Torque to the values given in this table unless specified otherwise below. Torque figures are in ft-lbs except those marked with an asterisk (*) which are in-lbs.

FASTENER	TYPE	MINIMUM TENSILE STRENGTH	MATERIAL	Body Size or Outside Diameter																
				2	3	4	5	6	8	10	1/4	5/16	3/8	7/16	1/2	9/16	5/8	3/4	7/8	1
	SAE 2 STEEL	74,000 PSI	LOW CARBON								6	12	20	32	47	69	96	155	206	310
	SAE 5 STEEL	120,000 PSI	MEDIUM CARBON HEAT TREAT						14*	22*	10	19	33	54	78	114	154	257	382	587
	SAE 7 STEEL	133,000 PSI	MEDIUM CARBON ALLOY								13	25	44	71	110	154	215	360	570	840
	SAE 8 STEEL	150,000 PSI	MEDIUM CARBON ALLOY								14	29	47	78	119	169	230	380	600	700
	SOCKET HEAD CAP SCREW	160,000 PSI	HIGH CARBON QUENCHED TEMPERED								16	33	54	84	125	180	250	400	640	970
	SOCKET SET SCREW	212,000 PSI	HIGH CARBON QUENCHED TEMPERED					9*	16*	30*	70*	140*	18	29	43	63	100	146		
	STUDS	Use SAE 2, 5 and 8 values when grade is known, with nut of sufficient strength.																		

SPECIFIC FASTENER TIGHTENING SPECIFICATIONS

CHASSIS COMPONENTS

Axle nut ..... 50 ft-lbs
Brake disc mounting screw (1973) ..... 35 ft-lbs
Brake disc mounting screw (1974 and later) .... 10 ft-lbs
Fork stem pinch bolt ..... 20 to 25 ft-lbs
Handlebar clamping bolt ..... 20 ft-lbs
Caliper (front brake) bolt ..... 35 ft-lbs
Brake disc (front brake) bolt ..... 35 ft-lbs

ENGINE COMPONENTS

Pinion gear nut (1977 & 1978) ..... 50 ft-lbs
Gear shaft nut ..... 100-120 ft-lbs
Sprocket shaft nut ..... 100-120 ft-lbs
Crank pin nut ..... 150 ft-lbs
Rocker arm cover screw ..... 20 ft-lbs
Cylinder head bolt ..... 65 ft-lbs
Carb. (Tillotson) inlet seat assy. ..... 40-45 in-lbs
Carb. (Tillotson) accel.-pump channel plug ..... 23-28 in-lbs
Clutch (1971 & later) hub nut ..... 150 ft-lbs
Cylinder base nut ..... 30 ft-lbs
Gear cover screws, chain cover screws, and oil pump ..... 100 in-lbs

ELECTRICAL COMPONENTS

Spark plug ..... 20 ft-lbs
Starter motor (Prestolite) thru bolt ..... 20-25 in-lbs
Starter motor (Hitachi) thru bolt ..... 20-25 in-lbs

LOCATING TROUBLES

The following check list will be helpful in locating most operating troubles:

ENGINE

STARTS HARD

1. Spark plugs in bad condition, partially fouled or have improper gap.
2. Spark plug cables in bad condition and "leaking."
3. Circuit breaker points out of adjustment or in poor condition.
4. Battery nearly discharged.
5. Loose wire connection at one of battery terminals, or at coil or circuit breaker.
6. Carburetor fuel mixture too rich or too lean.
7. Defective ignition coil.
8. Defective condenser.
9. Engine and transmission oil too heavy. (Winter operation.)
10. Engine ignition spark not timed properly.
11. Circuit breaker cam sticking in advance position.

STARTS BUT RUNS IRREGULARLY OR MISSES

1. Spark plugs in bad condition, or partially fouled.
2. Spark plug cables in bad condition and "leaking."
3. Spark plug gap too close or too wide.
4. Circuit breaker points out of adjustment or in need of cleaning.
5. Condenser connections loose.
6. Defective ignition coil.
7. Defective condenser.
8. Battery nearly discharged.
9. Loose wire connection at one of battery terminals, or at coil or circuit breaker.
10. Intermittent short circuit due to damaged wiring insulation.
11. Water or dirt in fuel system and carburetor.
12. Gasoline tank cap vent plugged or carburetor vent line closed off restricting fuel flow.
13. Carburetor fuel mixture too rich or too lean.
14. Weak or broken valve springs.

CRANKING MOTOR DOES NOT OPERATE OR DOES NOT TURN ENGINE OVER

1. Ignition switch or handlebar stop switch is not on.
2. Discharged battery, or loose or corroded connections.
3. Starter control circuit or solenoid defective.
4. Clutch slipping.
5. Electric starter shaft pinion gear not engaging.

ENGINE TURNS OVER BUT DOES NOT START

1. Gasoline tank empty.
2. Gasoline valve shut off.
3. Gasoline line clogged.
4. Discharged battery or loose or broken battery terminal connection. Check by turning light switch "ON."
5. Fouled spark plugs.
6. Spark plug cables in bad condition and "leaking."
7. Badly oxidized ignition circuit breaker points.
8. Circuit breaker and/or ignition timing points badly out of adjustment.
9. Loose wire connection at one of battery terminals, or at coil or circuit breaker.
10. Clutch slipping and starter not turning engine over.
11. Engine flooded with gasoline as a result of overchoking.
12. Engine and transmission oil too heavy (winter operation).

A SPARK PLUG FOULS REPEATEDLY

1. Too cold a plug for the kind of service.
2. Piston rings badly worn or in bad condition.

PRE-IGNITION

1. Excessive carbon deposit on piston head or in combustion chamber.
2. Too hot a spark plug for the kind of service or for type of engine.
3. Defective spark plugs.
4. Ignition timing too advanced.

OVERHEATING

1. Insufficient oil supply, or oil not circulating.
2. Carburetor fuel mixture too lean.
3. Ignition timing too late.

DETONATION

1. Unsuitable fuel (octane rating too low).
2. Heavy deposit of carbon on piston head and in combustion chamber.
3. Defective spark plug or wrong heat range.
4. Ignition timing too early.

EXCESSIVE VIBRATION

1. Cylinder head bracket loose or broken.
2. Engine mounting bolts loose.
3. Broken frame.
4. Tires or wheels defective.

LUBRICATION SYSTEM

OIL DOES NOT RETURN TO OIL TANK

1. Oil tank empty.
2. Scavenger pump gear key sheared.
3. Oil feed pump not functioning.

HIGH OIL CONSUMPTION

1. Breather valve incorrectly timed.
2. Piston rings badly worn or in bad condition otherwise.
3. Chain oiler adjusting screw adjusted for an excessive amount of oil.
4. Oil leak to outside.

ELECTRICAL SYSTEM

GENERATOR DOES NOT CHARGE

1. Brushes badly worn.
2. Brushes sticking in holders.
3. Voltage regulator not grounded.
4. Voltage regulator incorrectly adjusted.
5. Defective voltage regulator.
6. Commutator dirty or oily.
7. Positive brush holder grounded.
8. Generator "A" terminal grounded.
9. Loose or broken wire in generator-battery circuit.
10. Broken field coil wire or loose terminal (both coils).
11. Commutator shorted.
12. Defective armature.

CHARGING RATE IS BELOW NORMAL

1. Voltage regulator incorrectly adjusted.
2. Broken field coil wire or loose terminal (one coil).
3. Commutator worn and not turning true with shaft – throws brushes at high speed.
4. Commutator dirty or oily.
5. Brushes gummy and sluggish in holders.
6. Defective armature.

CARBURETOR

FLOODS

1. Inlet valve sticking.
2. Inlet valve and/or valve seat worn or damaged.
3. Dirt or other foreign matter between valve and its seat
4. Carburetor inlet lever not set correctly.
5. Excessive pumping of hand throttle grip.

TRANSMISSION

SHIFTS HARD

1. Bent shifter rod.
2. Clutch dragging slightly.
3. Transmission oil too heavy (winter operation).
4. Shifter forks (inside transmission) sprung as a result of using too much force when shifting.

JUMPS OUT OF GEAR

1. Shifter rod improperly adjusted.
2. Shifter forks (inside transmission) improperly adjusted.
3. Corners worn off shifter clutch dogs (inside transmission) – makes engagement difficult.

CLUTCH

SLIPS

1. Clutch controls improperly adjusted.
2. Insufficient clutch spring tension.
3. Worn and/or oil soaked friction discs (1970).
4. Worn friction discs (1971 & later).

DRAGS OR DOES NOT RELEASE

1. Clutch controls improperly adjusted.
2. Clutch spring tension too tight.
3. Friction discs gummy.
4. Clutch sprocket keys badly worn.
5. Clutch discs warped.
6. Transmission oil too heavy.

BRAKE

DOES NOT HOLD NORMALLY

1. Brake shoe improperly adjusted.

Brake controls binding.

3. Brake linings impregnated with grease as a result of over-lubrication.

4. Brake linings badly worn.

5. Brake drum badly worn or scored.

6. Brake shoes not centered.

(HYDRAULIC BRAKE ONLY)

1. Master cylinder low on fluid.

2. Brake line contains air bubbles.

3. Master or wheel cylinder piston worn or parts defective.

CHASSIS 2

TABLE OF CONTENTS

	PAGE
Drive	2-1
Wheels	2-5
Handlebar Throttle Control	2-17
Frame	2-19
Fork	2-21
Brakes	2-35
Fiberglass	2-47
Tools	2-53

FRONT CHAIN

GENERAL

The front chain should be checked every 2000 miles for correct adjustment. Check chain adjustment through oil filler opening located near the top of the chain cover. A correctly adjusted front chain should have free up-and-down movement in the upper stand midway between engine and clutch sprockets as follows: Front chain adjustment: 5/8 to 7/8 in. chain slack with cold engine; 3/8 to 5/8 in. chain slack with hot engine. Check adjustment at tightest point on sprockets, found by rotating sprockets.

WARNING — To prevent accidental starter operation, disconnect positive or negative battery lead before doing any work on the engine, drive or electrical systems.

ADJUSTMENT (1976 AND EARLIER) (Figure 2-1)

To adjust chain, remove left footrest, and rear brake foot lever. Place an oil drain pan under clutch and remove front chain cover screws, chain cover and gasket.

The front chain is adjusted by means of a shoe underneath the chain which can be raised to tighten or lowered to loosen the chain. The chain adjuster is secured to the inner surface of the chain compartment by 3 bolts. Simply loosen bolts and raise or lower chain adjuster. When chain is correctly adjusted tighten bolts securely and reassemble remaining parts.

Fill transmission with correct amount and type of lubricant as described in "GEAR BOX," Section 4.

ADJUSTMENT (1977 AND LATER) (Figure 2-2)

Adjusting Chain Tension

The front chain can be adjusted without removing the chain cover. Adjustment is made by loosening locknut (6), Figure 2-2, and turning the slotted adjusting screw (5) IN for tightening or OUT for loosening.

Screw (5) raises or lowers an adjuster assembly which contacts the lower strand of the front chain and applies pressure to make the chain operate with the right amount of free play.

After adjusting is completed, retighten locknut (6).

REPLACING ADJUSTER ASSEMBLY (Figure 2-2)

If screw (5) is screwed in all the way and chain is still loose, the adjuster assembly or chain probably is worn excessively and should be replaced.

To replace chain adjuster (2) remove drain plug and drain oil from chain case. Remove gear shifter pedal, footrest, chain case cover and gasket. Chain adjuster (2) must be replaced as an assembly when slider material is excessively worn or damaged. To replace, relax chain tension by unscrewing chain adjuster screw (5, Figure 2-2), and remove adjuster. Remove spring from old adjuster and assemble to new adjuster.

Remove foreign material from magnetic drain plug. Replace and securely tighten drain plug. Replace case cover and gasket. Install shifter pedal and footrest on shafts.

Fill gearbox with correct amount of lubricant as described in "TRANSMISSION," Section 4. Readjust chain for correct tension as described previously.

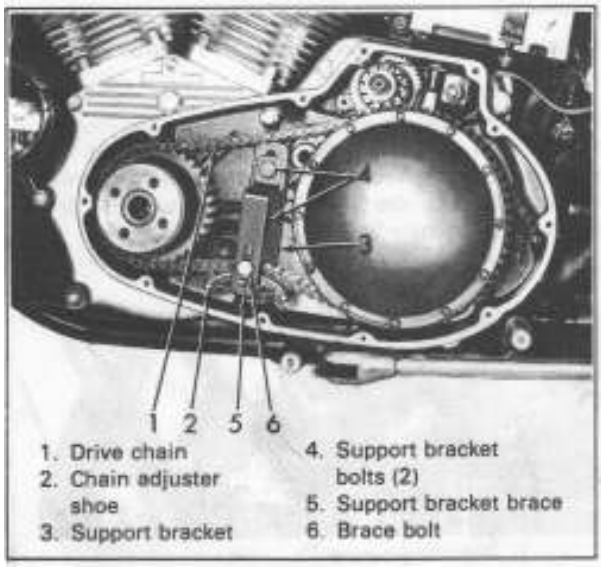

Figure 2-1. Front Chain Tensioner Adjustment (1976 and Earlier)

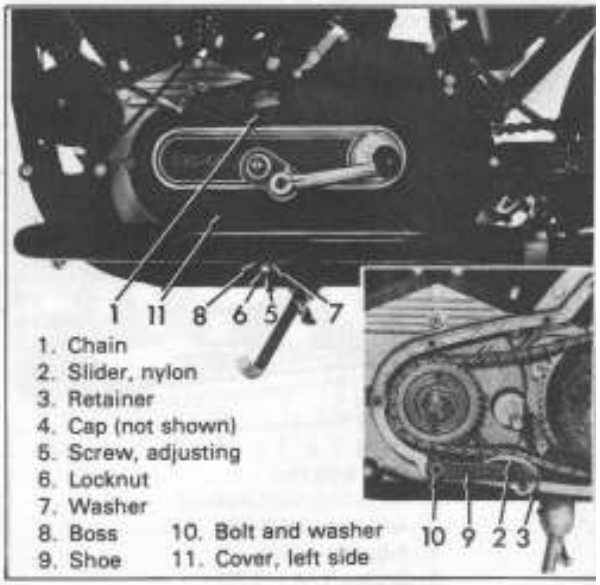

Figure 2-2. Front Chain Adjuster (1977 and Later)

LUBRICATION

There is an opening between the front chain and transmission compartments, and the same oil supply automatically lubricates moving parts in both compartments. For complete lubrication service on the front chain see "TRANSMISSION," Section 4.

REPLACING

Since the front chain is automatically lubricated by running in oil, little service will be required other than checking chain adjustment every 2000 miles. However, if through hard usage the front chain does become worn, it is essential to replace chain rather than trying to repair it. This will avert chain breakage and possible damage to the crankcases. To remove front chain, see "DISASSEMBLING CLUTCH," Section 4.

REAR CHAIN

ADJUSTMENT (Figure 2-3)

The rear chain should be checked every 1000 miles for correct adjustment. A correctly adjusted rear chain should have 1/2 in. free up-and-down movement midway between mainshaft and rear wheel sprocket with weight of motorcycle and rider on wheels. As chains stretch and wear in service, they will run tighter at one point on the sprockets than another; therefore always rotate rear wheel and check adjustment at tightest point of chain.

To adjust rear chain, loosen axle nut (1) on right side of motorcycle. Loosen locknut (2) from adjusting nut (3), on both sides of motorcycle. On 1973 to 1978 models also loosen anchor bolt (5). Turn adjusting nut (3) clockwise to move rear wheel back, tightening chain; turn adjusting nut (3) counterclockwise, and at the same time, tap each end of the axle to move the wheel forward, loosening the chain. Turn adjusting nut (3) on either side exactly the same number of turns to maintain alignment of wheel. With locknut (2) tight against adjusting nut (3), the distance from locknut to outer end of adjusting stud (4) should be the same on both sides.

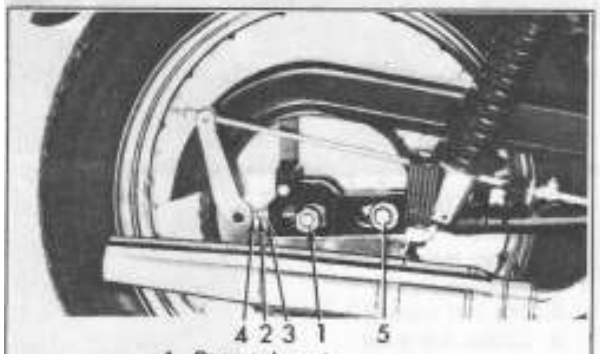

1. Rear axle nut
2. Adjusting stud locknut
3. Adjusting stud nut
4. Adjusting stud
5. Anchor bolt (1973)

Figure 2-3. Right Side Rear Wheel

Center brake shoes. Check correct alignment of wheel by observing that tire runs about midway between rear frame tubes and rear wheel sprocket runs centrally in the chain. When readjustment is completed, be sure to securely retighten rear axle nut (1), rear wheel adjusting stud locknut (2) and anchor bolt (5) where applicable. After adjusting rear chain, the rear brake may be too tight. Readjust brake linkage, if necessary, as described in "ADJUSTING REAR WHEEL BRAKE," Section 2.

REAR CHAIN OILER (1976 AND EARLIER) (Figure 2-4)

At regular service intervals (1000 miles) make a close inspection of rear chain. If it does not appear to be getting sufficient lubrication, or if there is evidence of an oversupply of oil, adjust rear chain oiler.

To adjust rear chain oiler, proceed as follows. Loosen locknut (2), if used, and turn screw (1) outward for more oil, and inward for less oil. Turn screw only a fraction of a turn at a time; lock adjusting screw in place if locknut is used.

The quantity of oil needed to lubricate the rear chain is very small. The size of the opening (orifice) through which oil bleeds to the chain is regulated by the adjusting screw. Sediment and gummy matter, accumulating in the oil supply, deposit in and around this orifice and gradually decrease the oil supply to the chain. A chain that has been lubricated perfectly the first 2000 miles may run short of oil the second 2000 miles. For this reason, even though inspection indicates the chain is amply lubricated, it is advisable to blow away accumulated sediment and restore the orifice to its original size at intervals of approximately 2000 miles.

To clean rear chain oiler, proceed as follows:

1. If locknut is used, back it out as far as possible.

2. Turn adjusting screw in until it bottoms on its seat. Count the number of turns needed to turn the screw in.

3. Remove adjusting screw and blow out orifice with compressed air.

4. Reinstall adjusting screw and turn it in until it bottoms on its seat.

5. Turn adjusting screw out the number of turns counted in Step 2 above and lock in place with locknut if used. This is the original setting. The rear chain oiler should be set to permit oil to flow at a rate of 2 to 3 drops per minute. This setting is approximately 3/4 of a turn.

1. Adjusting screw
2. Adjusting screw locknut (early 1970)

Figure 2-4. Rear Chain Oiler (1976 and Earlier)

REAR CHAIN LUBRICATION (1977 AND LATER)

The 1977 and later motorcycle is not equipped with a rear chain oiler. Therefore, the rear chain should be checked and lubricated at regular intervals.

Under normal operating conditions, brush off the dirt and lubricate chain at least every 300 miles. Use Harley-Davidson grade 75 or 105 (SAE 40 or 60) or "Chain Spray," "Chain Saver," or "Chain Grease." Apply at room temperature to both chain side plates and rollers. Apply with a brush or squirt can to thoroughly cover chain. Wipe off surplus lubricant.

SERVICING REAR CHAIN

At regular service intervals of 1000 miles, examine the rear chain for adequate lubrication and worn chain links. If additional chain lubrication is needed for 1976 and earlier models, adjust chain oiler according to the procedure described in "REAR CHAIN OILER (1976 AND EARLIER)"; for 1977 and later models, refer to paragraph titled, "REAR CHAIN LUBRICATION (1977 AND LATER)."

If the motorcycle is operated under extremely dirty, wet, or high speed conditions, extra cleaning and lubrication of the rear chain may be advisable from time to time.

Free chain from motorcycle by removing spring-locked connecting link. Connecting link pins which have press fitted side plates can be pressed apart with Chain Repair Tool, Part No. 95020-38 which is supplied in accessory rider tool kit. A shop tool is available for this purpose under Part No. 95021-29. Lay clean chain out flat and contract chain by taking up all slack in its links. Measure the chain length. Then stretch chain out to its full length and again measure chain length. If the difference between the two measurements exceeds 1 in., the chain should be replaced. In addition, if the chain has any stiff links and is visibly worn or damaged, it should be replaced. If a new chain is not available and it is necessary to repair the old chain, remove damaged links by pressing out riveted link pins with Chain Repair Tool.

Soak and wash thoroughly in a pan of solvent such as kerosene. After removing chain from kerosene, allow kerosene to drain off or blow off with air hose. After chain is completely dry, apply Harley-Davidson grade 75 or 105 (SAE 40 or 60) oil or "Chain Spray," "Chain Saver," or "Chain Grease." Apply at room temperature to both chain side plates and rollers. Wipe all surplus lubricant from surface of chain.

Install chain on motorcycle. Inspect connecting link and spring clip closely for bad condition. Replace if at all questionable. To install new press fitted connecting link, use Rear Chain Assembling Tool, Part No. 95020-66. Be sure spring clip is securely locked on pin ends, open end of clip on outside, trailing direction of chain travel, as positioned on motorcycle.

WHEELS

GENERAL

Maximum tire mileage and good handling qualities are directly related to care given wheels and tires. A front tire kept in continuous service will wear irregularly and peaked and may affect handling, especially if over-inflated. Therefore, it is extremely important that correct tire pressure be maintained at all times.

At regular intervals of 5000 miles, or at any time handling irregularities are experienced, see the chart below for recommended service.

WHEEL SERVICE CHART

CHECK FOR	REMEDY
1. Loose axle nuts.	Tighten axle nuts (50 ft-lbs maximum torque).
2. Excessive side-play or radial (up and down) play in wheel hubs.	Replace wheel hub bearings as described in "INSPECTING AND REPAIRING WHEEL HUBS."
3. Loose spokes.	Tighten or replace spokes as described under "TRUING WHEELS" and "SPOKING WHEELS."
4. Alignment of rear wheel in frame and with front wheel.	Check wheel alignment as described in this section, or inspect and straighten frame as described in "FRAME," or repair rear fork as described in "REAR FORK."
5. Rims and tires out-of-true sideways, (should not be more than 3/64 in.).	True wheels, replace rims or replace spokes as described under, "SPOKING WHEELS" and "TRUING WHEELS."
6. Rims and tires out-of-round or eccentric with hub (should not be more than 3/32 in.).	See Item 5, above.
7. Irregular or peaked front tire wear.	Replace as described in "REMOVING AND INSTALLING FRONT AND REAR WHEEL," and "REMOVING AND INSTALLING TIRE AND TUBE."
8. Correct tire inflation.	Inflate tires as described in "SPECIFICATIONS," General.
9. Correct tire and wheel balance.	Static balance may be satisfactory if dynamic balancing facilities are not available, however, dynamic balancing is also recommended.
10. Steering head bearings.	Correct adjustment and replace pitted or worn bearings. See "FORKS."
11. Shock absorbers.	Check damping action and mounting stud rubbers. See "FORKS."
12. Rear fork bearings.	Check for looseness. See "FORKS."

REMOVING AND INSTALLING FRONT WHEEL (1972 AND EARLIER) (Figure 2-5)

Raise front end of motorcycle high enough to permit removing wheel; support motorcycle by suitable blocking underneath frame. Disconnect brake control by removing brake clevis pin (1). Remove axle nut (2), and axle nut lockwasher (3). Remove brake anchor and shoe centering bolt (4), and lockwasher (5). Loosen axle pinch bolt (6). With a soft hammer loosen axle (7) and remove from hub and fork assembly. Remove front wheel and brake assembly complete.

To reinstall front wheel and brake assembly, reverse the disassembly procedure. Center brake shoes as described in "ADJUSTING FRONT WHEEL BRAKE." Inject one ounce of "Grease-All" grease into the wheel hub. Tighten axle nut to 50 ft-lbs torque. Tighten pinch bolts (6) to 11 ft-lbs torque. Spin wheel, to make sure it turns freely.

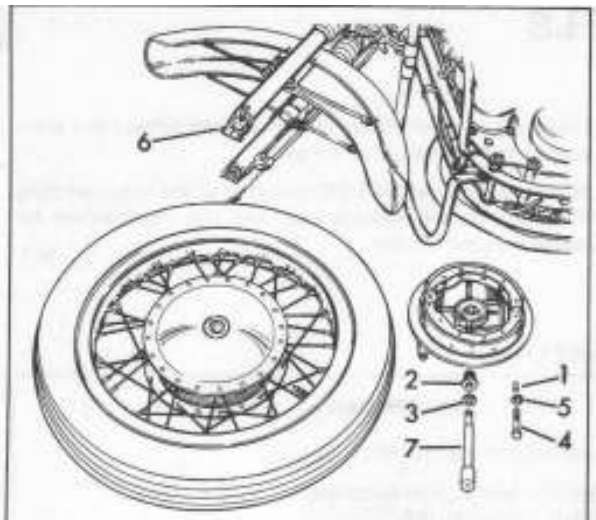

1. Brake clevis pin
2. Axle nut
3. Axle nut lockwasher
4. Brake anchor and centering bolt
5. Lockwasher
6. Front axle pinch bolt
7. Front wheel axle

Figure 2-5. Front Wheel Removal (1972 and Earlier)

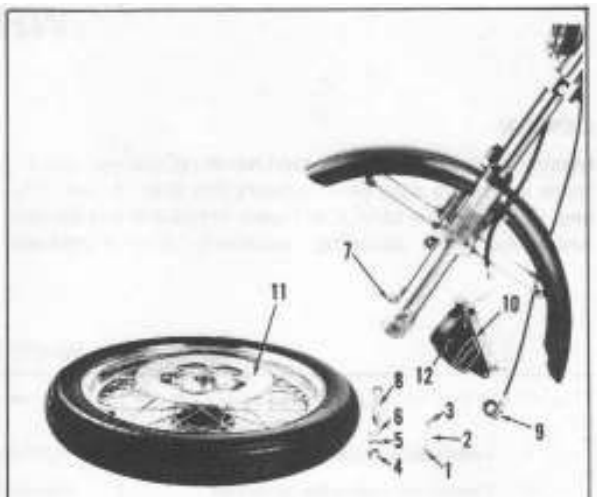

1. Caliper mounting bolt
2. Washer (2)
3. Locknut
4. Axle nut
5. Axle lockwasher
6. Axle washer
7. Slider cap nuts
8. Axle
9. Speedometer drive
10. Caliper
11. Brake disc
12. Bleeder fitting

Figure 2-7. Front Wheel Removal (1974 to 1977)

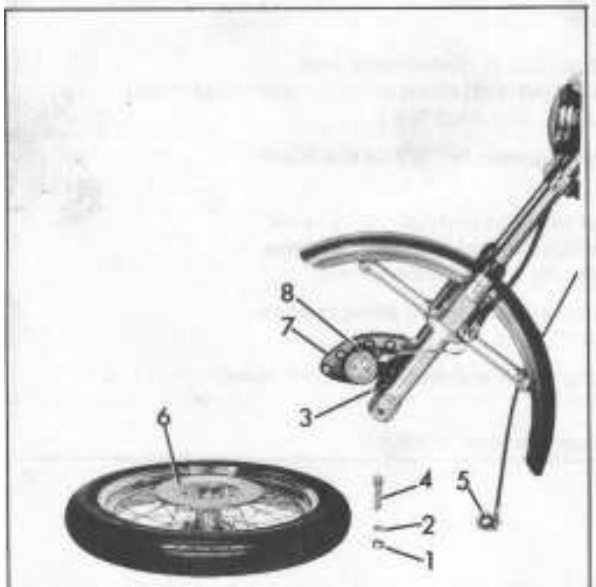

1. Axle nut
2. Axle nut lockwasher
3. Slider cap nuts
4. Front wheel axle
5. Speedometer drive
6. Brake disc
7. Brake caliper
8. Bleed fitting

Figure 2-6. Front Wheel Removal (1973)

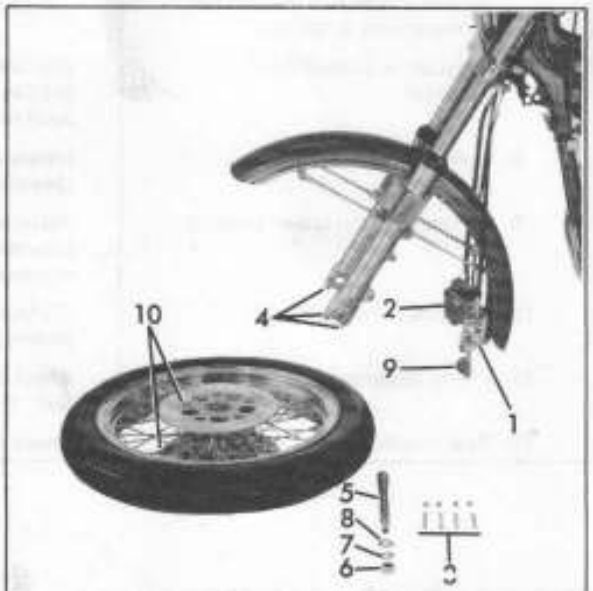

1. Left side caliper
2. Right side caliper
3. Caliper mounting hardware (2 sets)
4. Slider cap hardware (2 sets)
5. Axle
6. Axle nut
7. Axle lockwasher
8. Axle washer
9. Speedometer drive
10. Brake discs

Figure 2-8. Front Wheel Removal (1978)

REMOVING AND INSTALLING FRONT WHEEL (1973) (Figure 2-6)

Support motorcycle underneath frame with front wheel raised. Remove axle nut (1), and axle nut lockwasher (2). Loosen slider cap nuts (3). With a soft hammer tap left end of axle (4) to loosen it and start it out. Pull axle out of fork assembly. Remove front wheel assembly and speedometer drive.

To reinstall, reverse above procedure. Align the brake pads while installing the wheel so that the brake disc goes between caliper (7) pads. Be sure speedometer drive (5) ear engages hole in wheel hub when installed. Securely tighten axle nut (1) to 50 ft-lbs maximum torque and then tighten the two slider cap nuts (3) to 11 ft-lbs torque. This ensures proper alignment of the fork sides.

REMOVING AND INSTALLING FRONT WHEEL (1974 TO 1977) (Figure 2-7)

Support motorcycle underneath frame with front wheel raised. Remove brake caliper mounting bolt (1), washers (2) and locknut (3). Remove axle nut (4), lockwasher (5) and washer (6). Loosen slider cap nuts (7). With a soft hammer tap left end of axle (8) to loosen it and start it out. Pull axle (8) out of fork assembly. Remove front wheel assembly and speedometer drive (9). To reinstall, reverse above procedure. Align the brake pads while installing the wheel so that the brake disc goes between caliper (10) pads. Be sure speedometer drive (9) ear engages hole in wheel hub when installed. Securely tighten axle nut (4) to 50 ft-lbs, exercising care not to overtighten, and then tighten the two slider cap nuts (7) to 11 ft-lbs torque. This will ensure correct alignment of the fork sides.

REMOVING AND INSTALLING FRONT WHEEL (1978) (Figure 2-8)

Support motorcycle underneath frame with front wheel raised. Detach both the right and left caliper assemblies from the fork sliders by removing mounting hardware (3). Let caliper assemblies hang down loose out of the way as shown in figure. Remove axle nut (6), lockwasher (7) and washer (8). Loosen slider cap hardware (4). With a soft hammer tap left end of axle (5) to loosen it and start it out. Pull axle (5) out of fork assembly. Remove front wheel assembly and speedometer drive (9).

CAUTION — Do not operate front brake lever when the front wheel is removed because the brake caliper piston may be forced out of the bore, requiring disassembly of the brake system to get it properly reseated.

To reinstall wheel, reverse above procedure. Be sure speedometer drive (9) ear engages hole in wheel hub when installed. Securely tighten axle nut (6) to 50 ft-lbs and then tighten slider cap hardware (4) to 11 ft-lbs torque. This will ensure correct alignment of the fork sides. Tighten caliper mounting bolts (3) to 11 ft-lbs torque.

REMOVING AND INSTALLING REAR WHEEL (Figure 2-9)

Raise rear end of motorcycle high enough to permit removing wheel; support motorcycle by suitable blocking underneath frame. Locate and remove chain connecting link (1) and disengage chain from rear sprocket. Remove brake

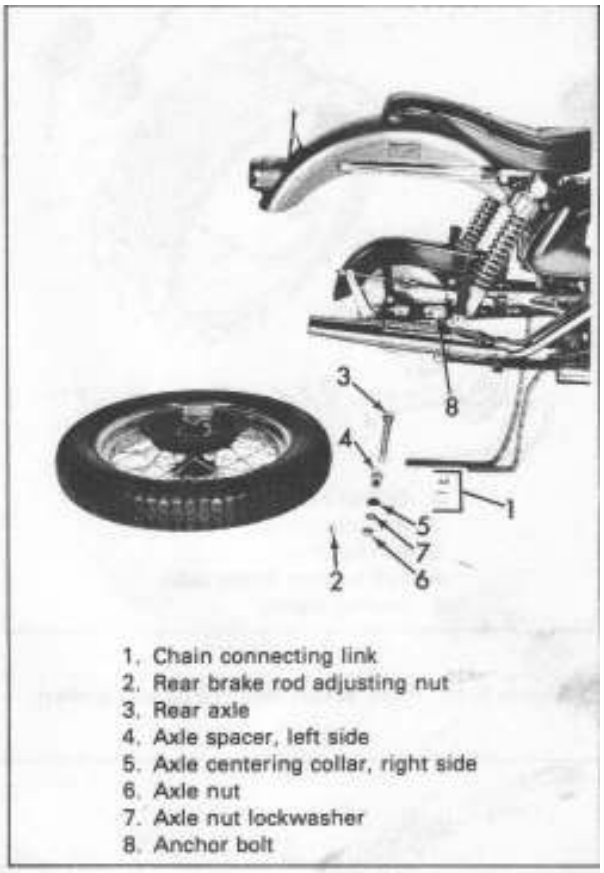

Figure 2-9. Rear Wheel Removal

adjusting nut (2) from brake rod. Remove axle nut (6), axle nut lockwasher (7) and centering collar (5). With a soft hammer tap right end of axle (3) to loosen from left side of frame. Remove axle from hub and frame assembly. Remove axle spacer (4) from left side. Slide wheel and brake assembly to extreme rear end of frame. Lift wheel up to pass brake drum over brake shoes. Remove wheel from motorcycle.

To reinstall rear wheel, reverse the disassembly procedure. Center brake shoes as described in "ADJUSTING REAR WHEEL BRAKE."

HUBS

DISASSEMBLING AND ASSEMBLING FRONT WHEEL HUB (1972 AND EARLIER) (Figure 2-10)

Pry grease seal (1) from wheel hub. Remove retaining ring (2) with Tru-arc lock ring pliers. Tap ball bearing (3) inward all the way against its seat in hub. This will move bearing (4) out far enough so that spacer (5) can be moved away from bearing (4). Then use a drift to tap out bearing (4) from opposite end of hub. Bearing (3) can now be tapped out from opposite end.

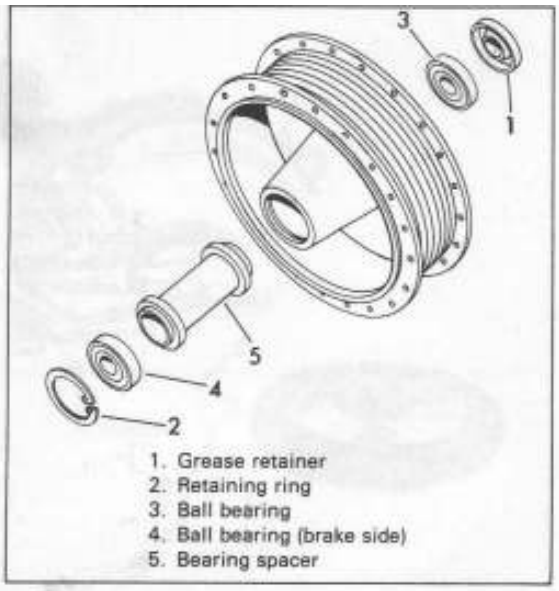

Figure 2-10. Front Wheel Hub (1972 and Earlier)

Clean and inspect all parts, paying particular attention to the wheel hub bearings. If bearings have excessive side play or radial (up and down) play in the wheel hubs, they should be replaced. If bearings have been removed from the hubs, carefully examine for visible wear, heat discoloration or damage to inner and outer races. Inspect brake shells or brake disc for scoring, grooving and worn running surfaces. Check spoke flanges for bent or damaged condition. Recommended hub repair is replacement of worn or damaged parts.

Clean and pack both ball bearings with fresh Grease-All grease. Press brake side ball bearing (4) against shoulder in hub, shielded side out. Install retaining ring (2) using Tru-arc lock ring pliers.

IMPORTANT

Flat side of retaining ring must be toward bearing.

Install bearing spacer (5). Press ball bearing (3) against shoulder in hub and tap grease retainer (1) in place.

DISASSEMBLING AND ASSEMBLING FRONT WHEEL HUB (1973 TO 1977) (Figure 2-11)

Remove oil seals (1), spacer (2), and bearing cones (3). Use a bearing puller to remove bearing cups (4). Spacer (5) may now be removed. Brake disc (6 or 6A) is secured to hub (9 or 9A) with 5 bolts and lockwashers (8) or screws (8A).

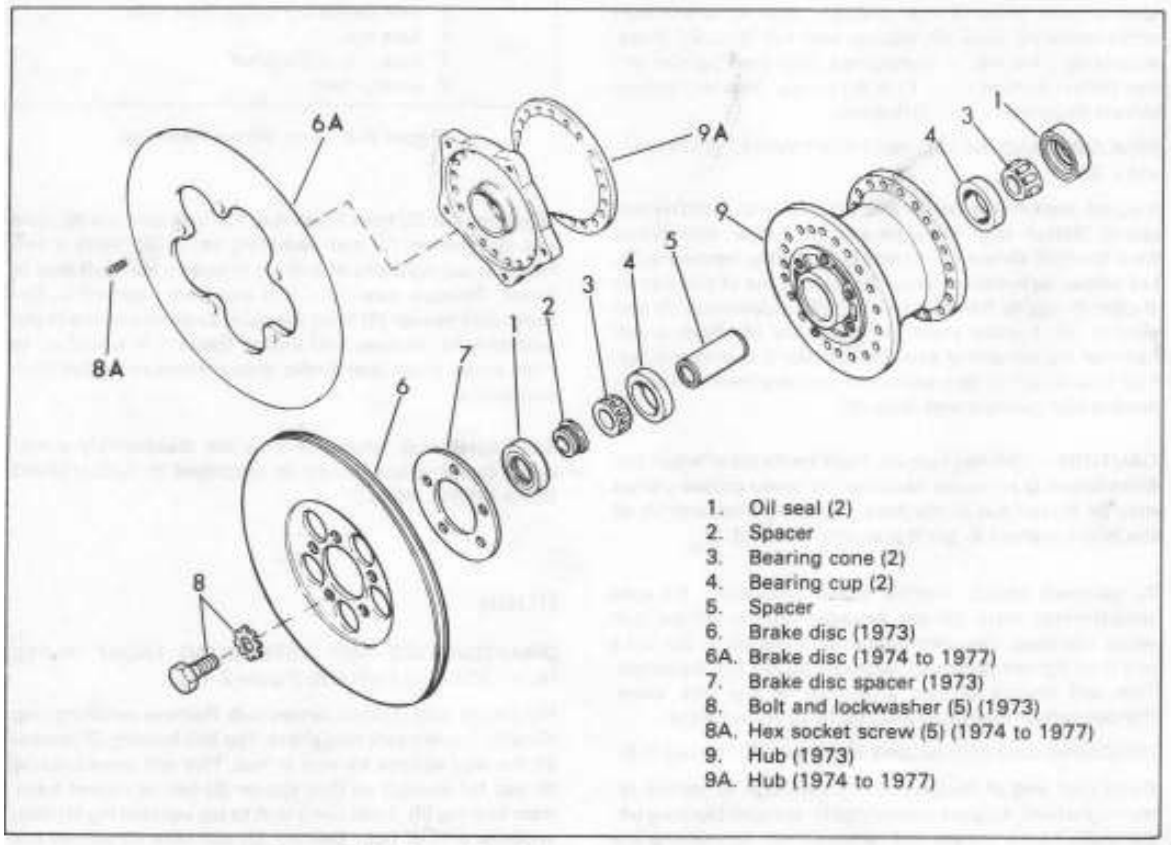

Figure 2-11. Front Wheel Hub - Exploded View (1973 to 1977)

Clean and inspect all parts, paying particular attention to the wheel hub bearings. If bearings have excessive side play or radial (up and down) play in the wheel hubs, they should be replaced. If bearings have been removed from the hubs, carefully examine for visible wear, heat discoloration or damage to inner and outer races. Inspect brake shells or brake disc for scoring, grooving and worn running surfaces. Check spoke flanges for bent or damaged condition. Recommended hub repair is replacement of worn or damaged parts.

Reassembly is basically the reverse of disassembly with the following exceptions: Apply a liberal amount of Harley-Davidson Grease-All to bearing cones (3) before assembly. Press oil seals (1) into hub flush with outer surface. Lubricate lip of oil seal before inserting spacer (2). If brake disc (6 or 6A) and brake disc spacer (7) have been disassembled make sure all mating surfaces are clean and flat before assembly. Apply Harley-Davidson "Stud and Bearing Mount," Part No. 99626-77, to threads and tighten bolts (8) to 35 ft-lbs torque or screws (8A) to 16 ft-lbs torque. When wheel is assembled to motorcycle, bearing end play should be .0025 to .015 in. If end play is not correct, substitute a slightly longer or shorter spacer (5) as necessary.

DISASSEMBLING AND ASSEMBLING FRONT WHEEL HUBS (1978) (Figures 2-12, 2-13)

Remove oil seals (1), spacer (2) and bearing cones (3). Use a standard bearing puller to remove bearing cups (4). Spacer (5) may now be removed. Brake discs (6) are secured to hub or wheel (8) with screws (7).

Clean all parts in solvent and inspect for damage or wear. Replace parts as necessary. If bearing cones or cups need replacing, replace as a set. Inspect brake discs for warping, scoring or worn running surfaces. Replace as necessary. On spoked wheels, check spoke flanges for bent or damaged condition.

Reassembly is basically the reverse of disassembly with the following exceptions: Apply a liberal amount of Harley-Davidson Grease-All grease to bearing cones before assembly. Lubricate lip of oil seal (1) before assembly. Press oil seals (1) into hub flush with outer surface. If brake discs (6) have been disassembled, make sure all mating surfaces are clean and flat. Apply Harley-Davidson "Stud and Bearing Mount," Part No. 99626-77, to threads of screws (7) and tighten to 16 ft-lbs torque. When wheel is mounted to motorcycle and axle nut is tightened to 50 ft-lbs torque, bearing end play should be 0.004 to 0.018 in. If end play is not correct, substitute a slightly longer or shorter spacer (5) as necessary.

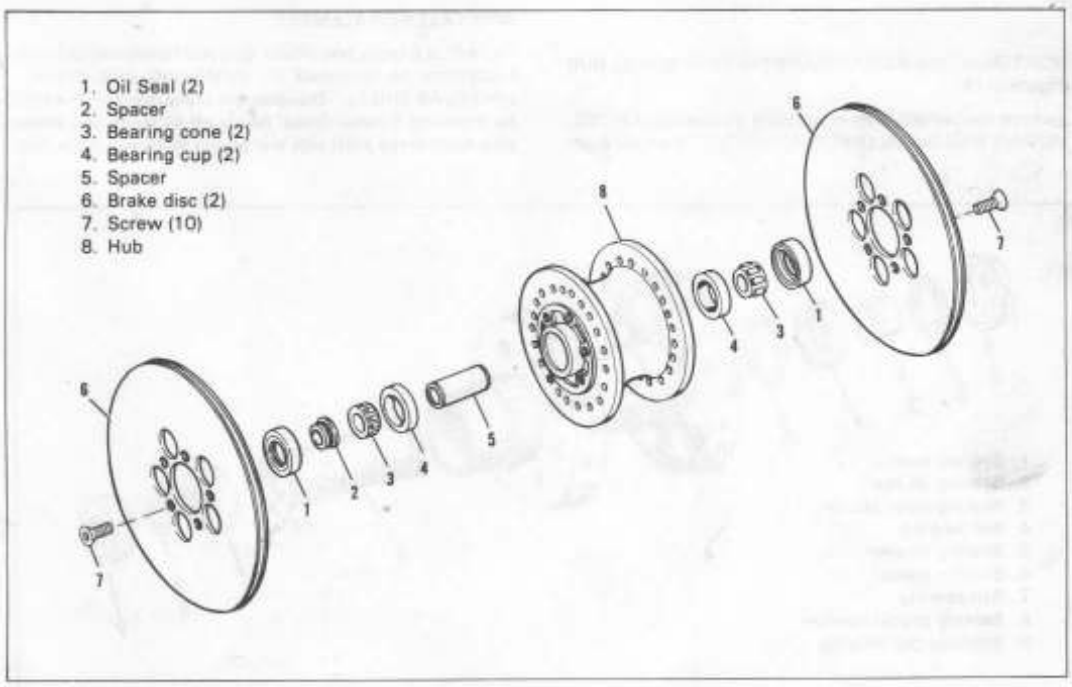

Figure 2-12. Front Wheel Hub (1978)

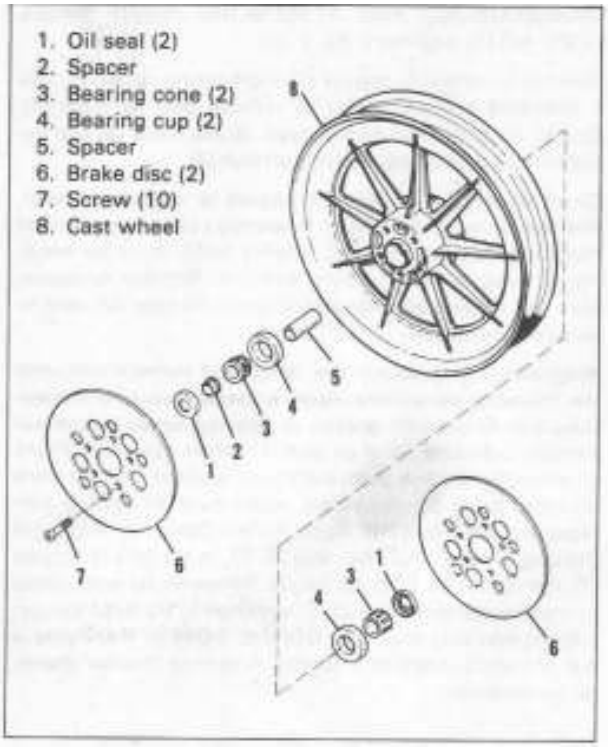

Figure 2-13. Front Cast Wheel Hub (1978)

DISASSEMBLING AND ASSEMBLING REAR WHEEL HUB (Figure 2-14)

Remove rear wheel from motorcycle as described in "REMOVING AND INSTALLING REAR WHEEL." Remove eight mounting bolts and brake drum from wheel. Using Tool, Part No. 94630-67, turn threaded bearing locknut (1) from hub, breaking stake locks as it is being removed. Drift out bearing oil seal (2) and outer spacer (3) from opposite side of hub. Repeat operation for ball bearing (4) and washer (5). Free bearing spacer (6). Drift out ball bearing (7), spacer (8) and ball bearing (9) from opposite side of hub.

Clean and inspect all parts, paying particular attention to the wheel hub bearings. If bearings have excessive side play or radial (up and down) play in the wheel hubs, they should be replaced. If ball bearings have been removed from the hubs, carefully examine for visible wear, heat discoloration or damage to inner and outer races. Inspect brake shells for scoring, grooving and worn running surfaces. Check spoke flanges for bent or damaged condition. Recommended hub repair is replacement of worn or damaged parts.

Press oil seal (2) into locknut (1) and insert outer spacer (3) in oil seal (2) and locknut (1). Install washer (5) and ball bearing (4). Assemble locknut (1), oil seal (2), and outer spacer (3) into hub as one unit. Peen locknut to hub in two places and insert bearing spacer (6).

Press unshielded bearing (7) against bearing spacer (6). Install bearing spacer washer (8) and shielded ball bearing (9) on outside. Inject one ounce of "Grease-All" grease into the wheel hub. Install brake drum on hub with eight mounting bolts. Tighten bolts to 16-19 ft-lbs torque. Spin wheel to make sure it turns freely.

SPROCKET REPLACEMENT

To replace a worn rear wheel sprocket remove wheel from motorcycle as described in "REMOVING AND INSTALLING REAR WHEEL." Disassemble brake drum from wheel by removing 8 bolts. Chisel heads off all rivets and dowel pins from brake shell side and punch them out. If the rivet

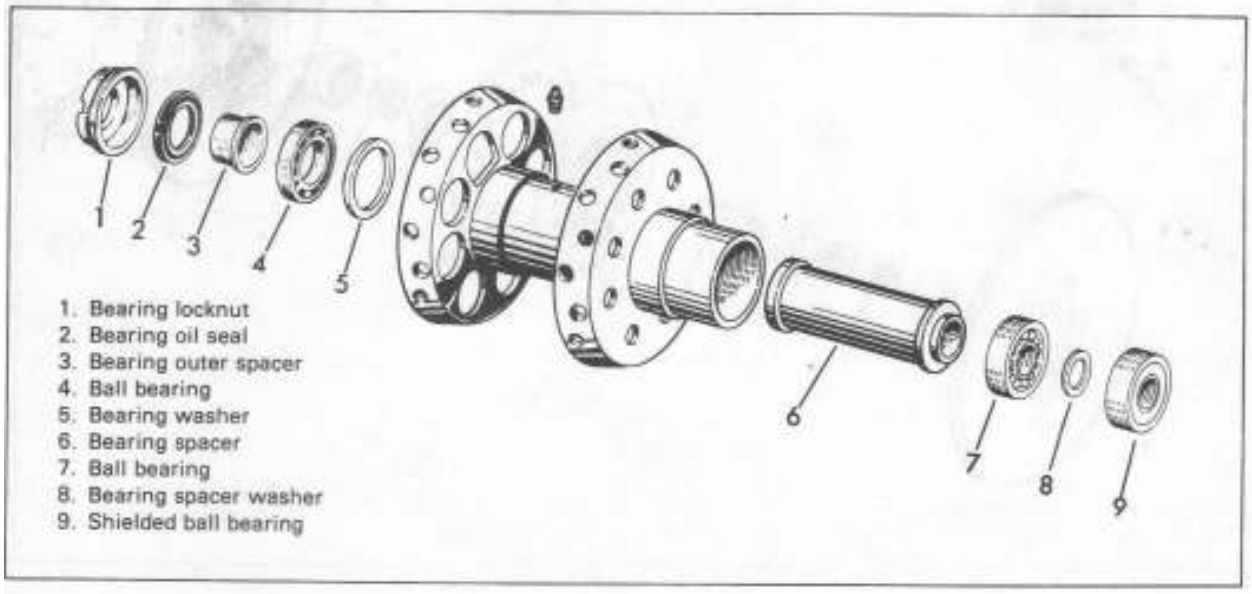

Figure 2-14. Rear Wheel Hub - Exploded View

holes are not worn, use the rivet holes again. If the rivet holes are found slightly worn or elongated and drum is in good condition, drill a new set of rivet holes in drum flange midway between original dowel and rivet holes.

To drill new rivet holes, proceed as follows using new sprocket as a template for locating holes.

1. Drill a 9/64 in. hole from the brake shell side.

2. Drill one hole and insert rivet (do not head rivet).

3. Drill a hole directly opposite first hole and insert rivet (do not head rivet).

4. Drill remaining 14 rivet holes.

5. Remove rivets and separate sprocket from drum.

6. Remove burrs from newly drilled holes.

Whenever a rear wheel sprocket is replaced it is very important to drill new dowel holes to ensure a press fit for the dowel pins. Use the new sprocket as a template and drill the four dowel pin holes 3/16 in. dia. for a press fit.

Position sprocket and drum on center support flange of Riveting Jig, Part No. 95600-33A. Proceed as follows, *inserting and seating dowel pins first, and then rivets.*

1. Insert dowel pin and rivet from brake shell side.

2. Use hollow driver and seat dowel pin and rivet at the same time driving sprocket and hub flange together.

3. Use concave punch and flare dowel pin end. Head rivet end until head extends 3/64 in. above sprocket face.

4. Repeat steps 1, 2 and 3 seating *opposite* dowel pins and rivets until all are in place.

This procedure will prevent distortion of sprocket.

Install brake drum on wheel. Tighten mounting bolts and nuts to 25 ft-lbs torque. Install wheel in motorcycle as described in "REMOVING AND INSTALLING REAR WHEEL."

SPOKING

FRONT WHEEL (Figures 2-15, 2-16)

Front wheel rim is identified by Part No. stamped in rim well as follows: 19 in. steel 43002-70, and 19 in. aluminum 43010-70 for 1972 and earlier, 43003-73 for 1973 to 1977, or steel 43341-78 and aluminum 43351-78 for 1978. Twenty spoke holes are equally spaced around each side flange of hub and twenty spoke holes are arranged in pairs on each side of rim well. Holes are spaced the same on each side of both rim and hub.

Note that there are two types of spokes: long and short. They are identified by the shape of the bent end as shown in Figure 2-15. One long and one short spoke are used in each pair. The long spoke (L) of each pair on rim crosses over to opposite side of hub while the short spoke (S) of each pair on rim connects to same side of hub. Spoke arrangement is shown in Figure 2-15 or 2-16.

1. Place hub on bench with brake side of hub up.

2. Insert 10 short spokes in every other hole from outside of brake side flange.

3. Insert 10 long spokes in remaining holes.

4. Turn hub over on bench with brake side of hub down.

5. Insert 10 short spokes in next holes to right (clockwise) from long spoke holes in opposite flange.

6. Insert 10 long spokes in remaining holes.

7. Swing short spokes counterclockwise and long spokes clockwise crossing underneath short spokes and forming pairs.

8. Place rim over hub (either side down).

9. Cross long spokes clockwise underneath short spokes and insert into right (clockwise hole) of each pair of holes that angles in same direction as spoke on opposite side of rim well. See L-1 in Figure 2-15 or 2-16.

10. Cross short spokes clockwise above long spokes and insert into right (counterclockwise hole) of each pair on near side of rim well that angles in same direction as spoke. See S-1 in Figure 2-15 or 2-16.

Spoke will enter 6th hole (1972 and earlier) or 14th hole (1973 and later) to left of clockwise long spoke hole in rim. Repeat for remaining spokes. Start nipples on spokes as they are inserted in rim until all spokes are secured.

11. Turn wheel over and repeat procedure for spokes on brake side.

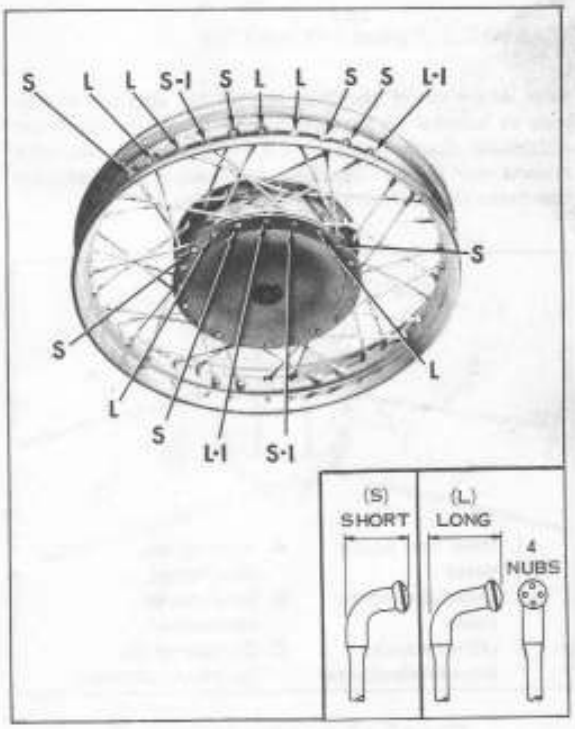

Figure 2-15. Front Wheel Lacing (1972 and Earlier)

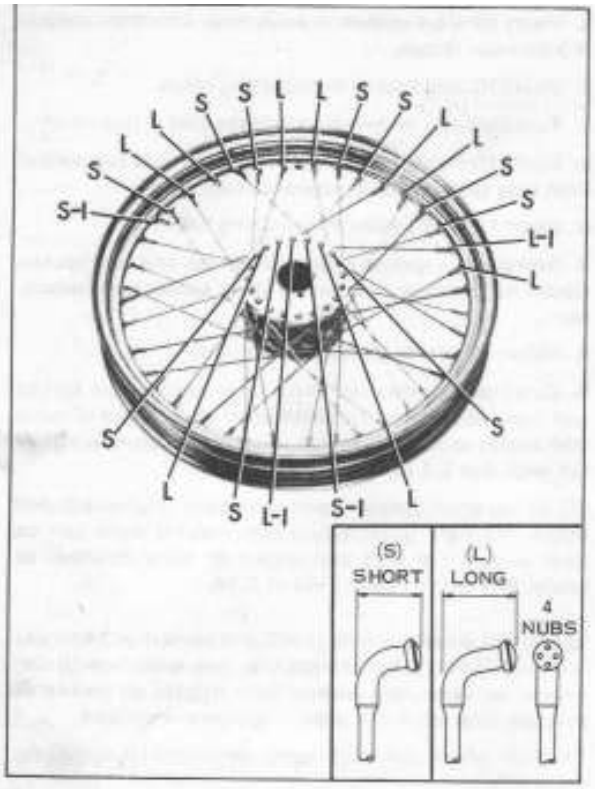

Figure 2-16. Front Wheel Lacing (1973 and Later)

REAR WHEEL (Figures 2-17 and 2-18)

Rear wheel rim is identified by Part No. stamped in rim-well as follows: 18 in. steel 43005-70, 18 in. aluminum 43008-70. Spoke holes in hub flanges are in two rows around each flange – ten inner row holes (1) and ten outer row holes (2, Figure 2-17) in each flange.

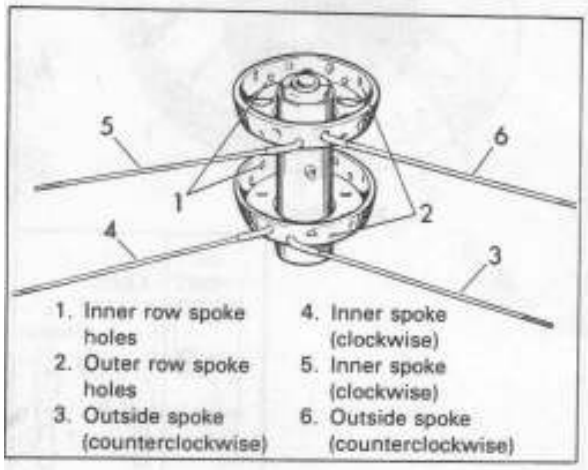

Figure 2-17. Inserting Spokes in Rear Wheel Hub

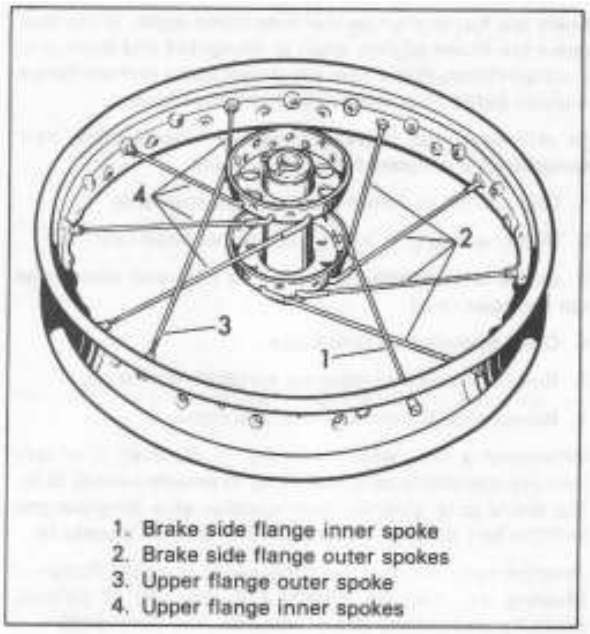

Figure 2-18. Lacing Rear Wheel

1. Place hub on bench with brake drum end of hub down as shown in Figure 2-17.

2. Insert spokes (3) in ten outer spoke holes of brake side flange and swing loose end of spokes counterclockwise, as far as hub will allow.

3. Place rim over hub (either side down) and insert spokes in lower row of holes in rim, that angle in same direction as spokes.

4. Just start nipples on spokes as they are inserted in rim.

5. Insert spokes (4) in ten inner spoke holes of brake side flange and swing loose end of spokes clockwise as far as hub will allow.

6. See Figure 2-18. Select any inner spoke (1), cross it over four outer spokes (2), and insert spokes in nearest lower rim holes. Start nipples.

7. Insert spokes (5, Figure 2-17) in ten inner spoke holes of opposite flange (upper flange as positioned on work-bench) and swing loose end of spokes clockwise as far as hub will allow. Then, insert inner spokes in nearest upper rim holes that angle in same direction as spokes and start nipples.

8. Insert spokes (6, Figure 2-17) in remaining ten outer spoke holes of upper flange and swing end of spokes counterclockwise as far as hub will allow.

9. See Figure 2-18. Select any outer spoke (3), cross it over four inner spokes (4), and insert spokes in nearest upper rim holes. Start nipples.

NOTE

Outer spokes on both sides should point in same direction.

TRUING WHEELS

TRUING RIM

1. See Figure 2-19 and proceed as follows. Insert arbor in wheel hub and place wheel in Truing Stand, Part No. 95500-29A.

2. Front Wheel: Starting at valve hole, tighten all nipples opposite brake flange side until end of spokes are approximately 1/16 in. from being flush with head of nipple. Use Nipple Wrench, Part No. 94681-39.

3. Rear Wheel: Turn each nipple on just far enough to cover spoke threads. Start at valve hole and tighten all nipples three full turns each. Then, proceed to tighten all nipples one full turn at a time until spokes are snug in wheel.

4. Front and Rear Wheel: Check rim for concentricity, centering sideways with hub and for running true sideways (Figures 2-19 and 2-20). Centering rim sideways must be done as one operation. Rim must be properly centered sideways in relation to hub for correct alignment and "tracking" of wheels. Figures 2-21, 2-22 and 2-23 show method of using a straightedge to determine correct sideways centering of wheel rim. If rim is too close to straightedge, loosen all nipples on brake side and tighten all nipples on opposite side same amount. If rim is too far from straightedge, reverse operations. Lay straightedge across brake side as shown and measure distance from straightedge to rim. When rim is correctly centered, this distance will be as shown for each wheel listed.

Adjust truing stand gauge (Figure 2-19), to side of rim well so rim at highest point will strike gauge as wheel is rotated slowly. Loosen nipples at highest point of rim on gauge side, and tighten nipples on opposite side the same number of turns. Repeat this operation until rim runs true sideways. Reverse loosening and tightening of nipples, as explained above, if rim moves too far away from gauge. After each loosening and tightening of spokes, check rim in relation to hub as shown in Figures 2-21 and 2-22. Rim should be trued sideways to within 1/32 in.

NOTE

A dial indicator is recommended in place of gauge rod for fine adjustment.

After rim has been centered sideways with wheel hub and runs true sideways, check for concentricity. Adjust truing stand gauge (Figure 2-20) to rim tire bead seat. If rim runs eccentric (radial runout) nipples must be loosened at points rim does not contact gauge, and nipples tightened at points rim contacts gauge. Amount nipples are to be loosened or tightened is determined by the amount rim is out of round. Rim should be trued concentrically to 1/32 in. or less radial runout.

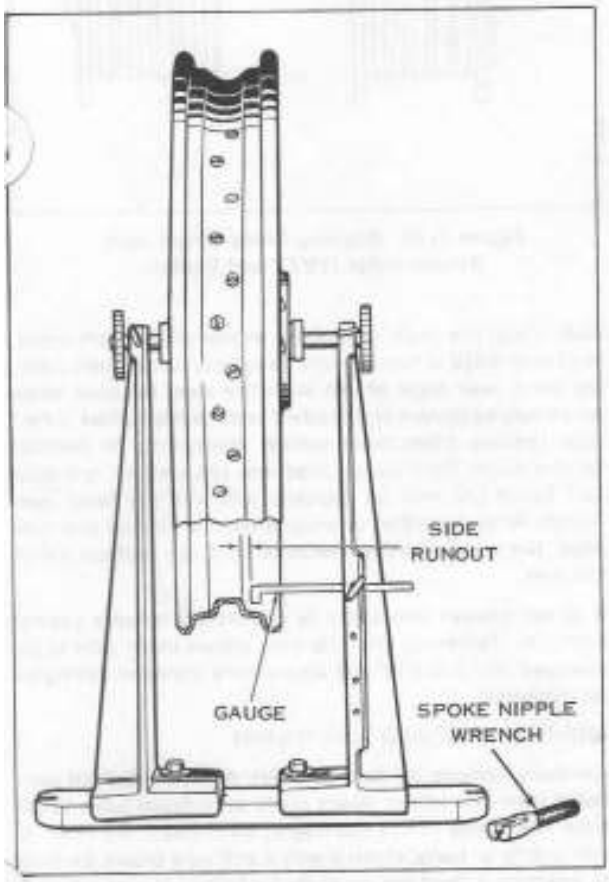

Figure 2-19. Truing Rim Sideways

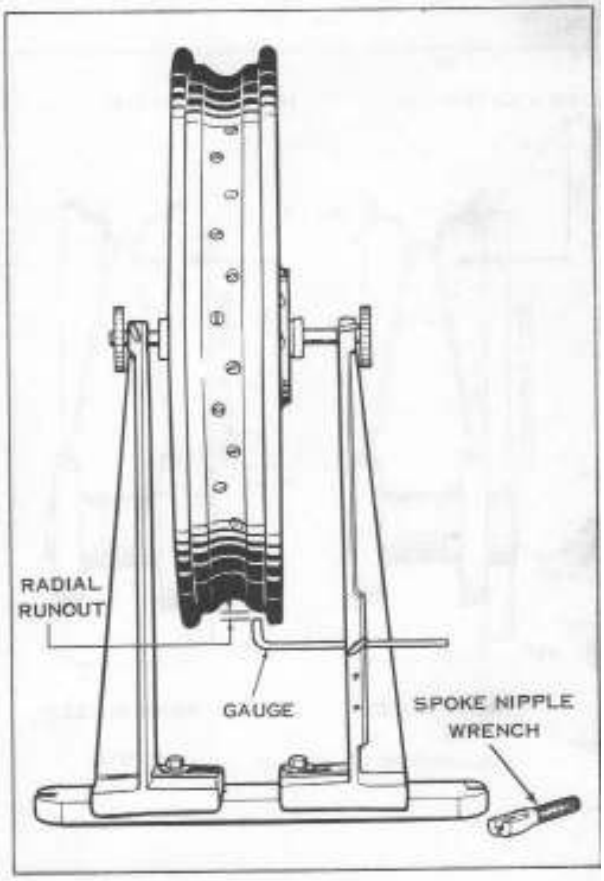

Figure 2-20. Truing Rim Concentric with Hub

5. After wheels have been checked and corrected as described in paragraph 4, start at valve hole and tighten nipples one turn at a time all the way around rim until spokes are normally tight. If possible compare with a new wheel. While tightening nipples, repeatedly check rim with gauge or dial indicator according to instructions under paragraph 4.

6. After all nipples have been pulled up, until spokes are normally tight and wheel is true, seat each spoke head into hub flange with a sharp blow, using a flat nose punch and hammer. Then retighten all nipples and finish truing wheel. This method allows spokes to be drawn tighter at the start and prevents possibility of spokes loosening after wheel is put into service as the result of spoke heads heating into the flange.

Do not tighten spokes too tight or nipples may draw through rim, or hub flanges may be distorted. If spokes are left too loose, they will continue to loosen when wheel is put in service.

7. File or grind off ends of any spokes protruding through nipples to prevent puncturing tube when tire is mounted.

REMOVING TIRE AND TUBE FROM RIM

Remove valve cap and valve core to free all air from tube. Remove valve stem nut. Loosen both beads from rim flanges by stepping on sides of tire or by using a tire tool. Stand or kneel on tire opposite valve to push bead into rim-well. Using tire tools, (not sharp instruments), start upper bead over edge of rim at valve. Don't use force when starting bead over edge of rim with tire iron, because bead wires may be broken or stretched and the tire ruined. Carefully remove inner tube before attempting to remove second bead. Push lower bead into rim-well on one side and insert tire iron on opposite side and pry bead over flange. After a portion of second bead is started over rim edge, tire can be further removed from rim without aid of tire iron.

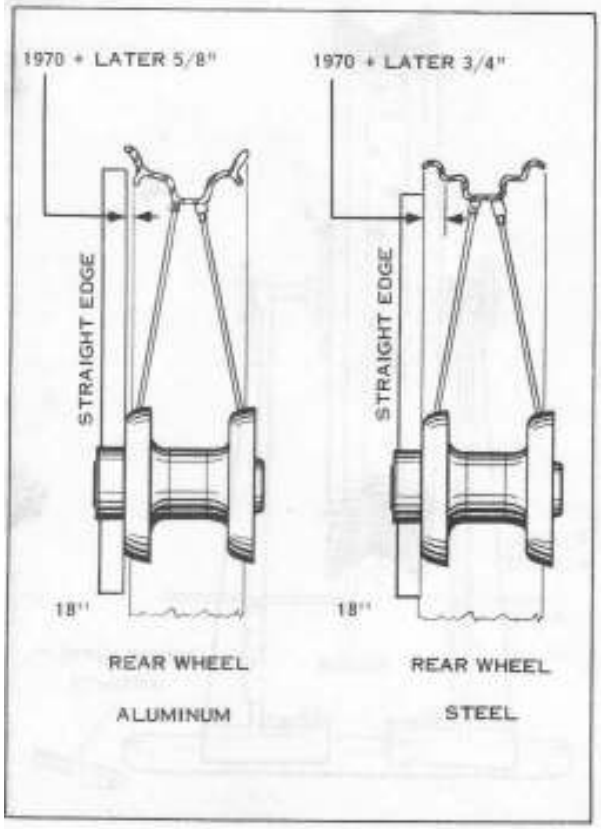

Figure 2-21. Aligning Rear Wheel with Straightedge

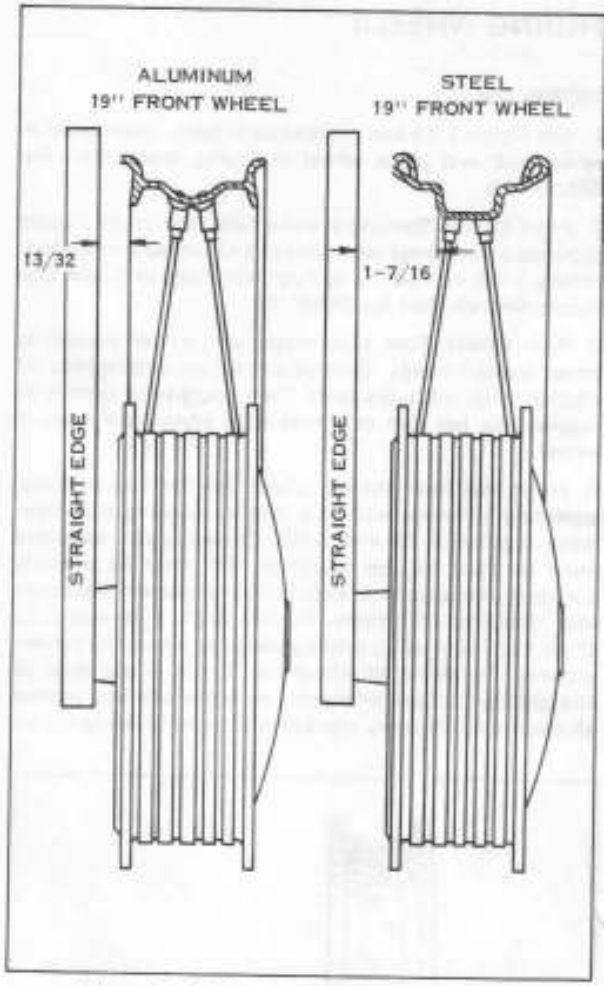

Figure 2-22. Aligning Front Wheel with Straightedge (1972 and Earlier)

It is not always necessary to completely remove casing from rim. Removing one side only allows inner tube to be removed and installed and also allows inside of casing to be inspected.

MOUNTING TIRE AND TUBE ON RIM

Carefully remove all dust and dirt, particularly hard particles from tire which might chafe an inflated tube. Wipe tube and inside of tire thoroughly with clean, dry cloth. If rim is dirty or rusty, clean it with a stiff wire brush. Be sure to examine a used tire carefully for fabric injuries which if neglected will damage tube.

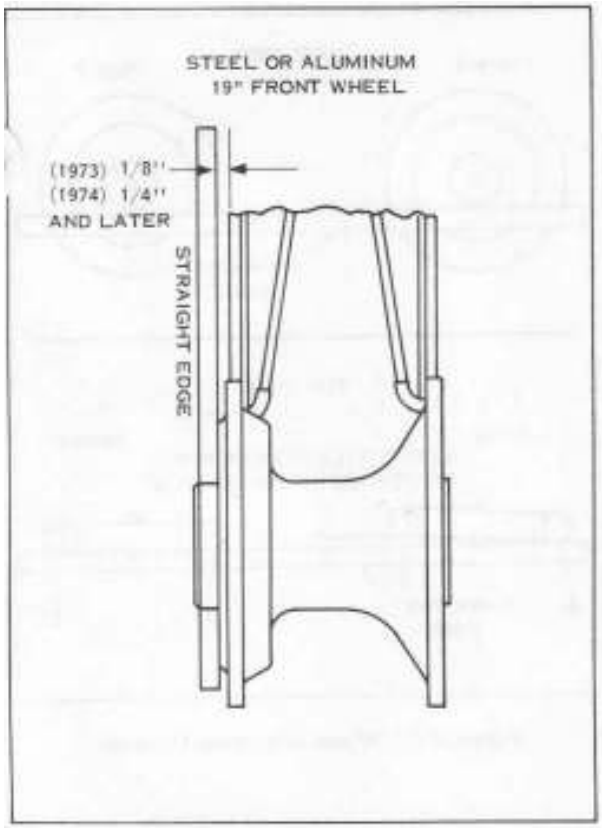

Figure 2-23. Aligning Front Wheel with Straightedge (1973 and Later)

Position rubber rim strip in rim-well with valve holes correctly registered. Swab thoroughly all around base of tube, between tube and side walls of tire with tire mounting compound. Place valve at tire balance mark, and inflate tube just enough to round it out. With wheel lying flat, place tire on rim with arrow on sidewall pointing in direction of forward tire rotation, and align valve with hole in rim. Push bottom bead into rim-well near valve, and hold in well while forcing remaining portion of bead over rim flange with a tire tool. Spread tire and insert valve through hole in rim. Force upper bead over rim flange and into well at point opposite valve. Stand or kneel at this point to hold bead in well and pry remaining portion of tire over rim flange. While forcing bead over rim flange, keep as much bead as possible in rim-well. Be careful not to damage beads or pinch tube.

Inflate tire to recommended pressure, then completely deflate tire to smooth out any wrinkles in tube and allow tube to find its place, free from strain or stress. Again, inflate to recommended pressure and check valve for leak. See "SPECIFICATIONS," Section 1, for correct tire pressure.

CHECKING TIRE TRUENESS SIDEWAYS (LATERAL RUNOUT)

Check runout by truing wheel on axle, measuring amount of sideways displacement from a fixed point near the tire (see Figure 2-24).

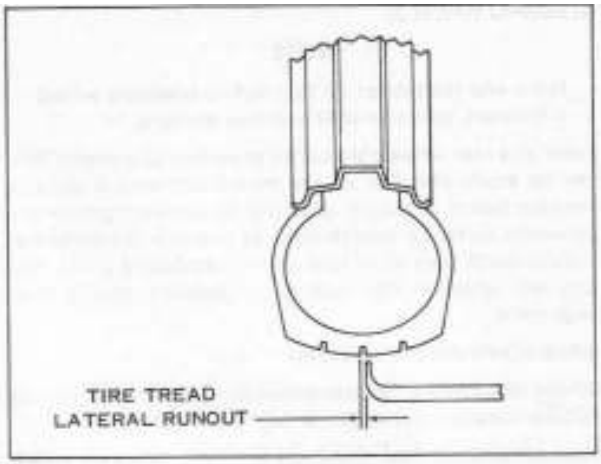

Figure 2-24. Checking Tire Lateral Runout

Tire tread runout should be no more than 3/64 in. If tire tread runout is more than 3/64 in., remove tire from rim and check rim bead side runout to see if rim is at fault (see "TRUING WHEEL").

If rim side runout is less than 1/32 in., tire is at fault and should be replaced. If rim side runout is more than 1/32 in., correct by tightening selected spoke nipples as outlined previously, reinstall old tire and recheck tire tread lateral runout.

CHECKING TIRE ROUNDNESS (RADIAL RUNOUT)

Check runout by turning wheel on axle, measuring tread runout (see Figure 2-25).

Tire tread runout should be no more than 3/32 in. If tire tread runout is more than 3/32 in., remove tire from rim and check rim bead runout to see if rim is at fault (see "TRUING WHEEL").

If rim bead runout is less than 1/32 in., tire is at fault and should be replaced. If rim bead runout is more than 1/32 in. correct by tightening selected spoke nipples as outlined previously, then reinstall tire and recheck tire tread runout.

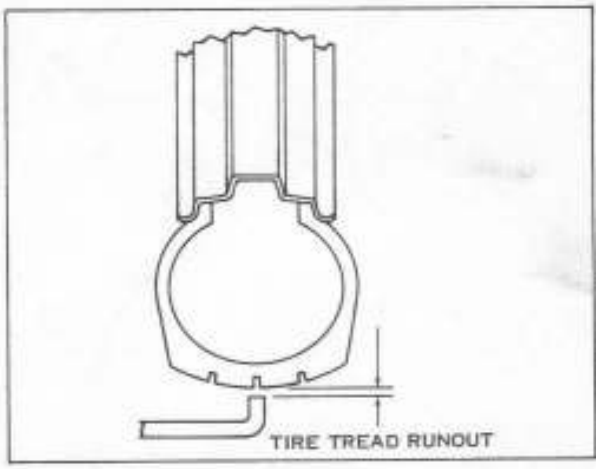

Figure 2-25. Checking Tire Radial Runout

ALIGNING WHEELS

NOTE

Rims and tires must be true before checking wheel alignment, as outlined in previous paragraphs.

Front and rear wheels should be in perfect alignment. This can be easily checked on the motorcycle with a straight wooden board or length of string by placing against tire sidewalls as far up toward axles as possible. Straightedge should touch tires at all four points (see Figure 2-26). Adjust rear wheel in axle clips as necessary to correct misalignment.

BALANCING WHEEL AND TIRE

Wheel balancing is recommended to improve handling and reduce vibration, especially at high road speeds.

Harley-Davidson has made available the following spoke balance weights which press over the spoke nipple.

1 oz. weight, Part No. 95582-47
3/4 oz. weight, Part No. 95581-47
1/2 oz. weight, Part No. 95578-41

Cast aluminum wheels require the special self-adhesive weights listed below:

Aluminum color
1 oz. weight, Part No. 95588-75
1/2 oz. weight, Part No. 95587-75

Black
1 oz. weight, Part No. 95591-77
1/2 oz. weight, Part No. 95590-77

Self adhesive wheel weights should be applied to the flat surface of the rim. Make sure that area of application is completely clean, dry and free of oil and grease. Remove paper backing from weight and press firmly in place so that arrow on weight points in the direction of wheel rotation. If 1 oz. or more of weight must be added at one location, split the amount so that half is applied to each side of the rim. Wheel should not be used for 48 hours to allow adhesive to cure completely.

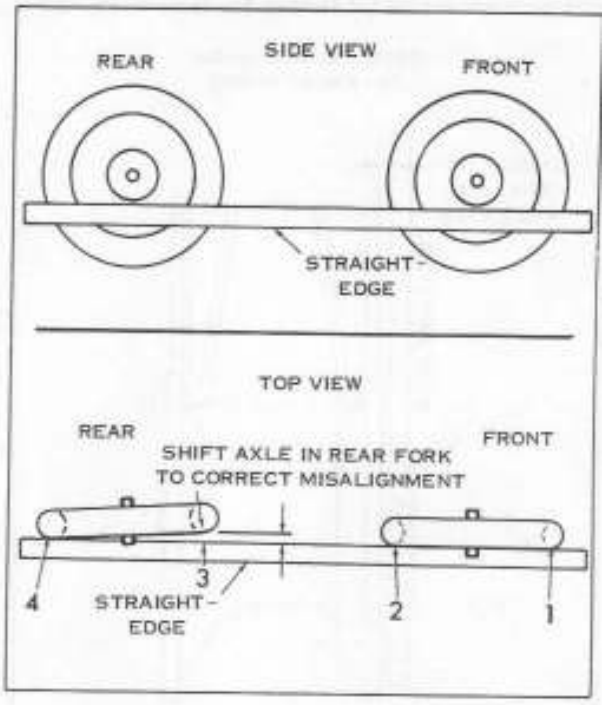

Figure 2-26. Wheel Alignment Diagram

In most cases, static balancing using Wheel Truing Stand, Part No. 95500-29A, will produce satisfactory results. However, dynamic balancing, utilizing a wheel spinner, can be used to produce finer tolerances for best high speed handling characteristics. Follow the instructions supplied with the balance machine you are using. The maximum weight permissible to accomplish balance is 3-1/2 oz. total weight applied to the rim. Wheels should be balanced to within 1/2 oz. at 60 mph.

HANDLEBAR THROTTLE CONTROL

SPIRAL TYPE

ENERAL

Handlebar throttle control must operate freely. If a control becomes stiff and hard to adjust, parts must be removed and cleaned of caked grease, gum and dirt. A kinked control wire or coil must be replaced.

DISASSEMBLING AND ASSEMBLING (Figure 2-27)

Disconnect control coil and wire at carburetor.

Remove handlebar end screw using a wrench and screwdriver. Sometimes this screw is difficult to remove. In this case, insert a punch in screw slot and loosen screw by striking punch several sharp blows.

After removing grip sleeve assembly (1, 2 and 3), working parts are accessible. Remove roller pin (4) and rollers (5). Pull plunger (6) with control wire (8) attached, from handlebar end. Wire is fastened into end of plunger by means of a set screw (7). If wire is broken, remove other half from coil at carburetor and circuit breaker connection end.

To free control coil (housing) from motorcycle, remove grip control parts as explained above. Then, remove the small set screws underneath each handlebar side to free coil end plugs (9). Loosen rear fork panels and handlebar clamp cover from the motorcycle. Remove control coil and end plug as a unit from handlebar end.

Clean all parts thoroughly removing all rust, dirt and gummy grease deposits, especially from plunger inside of grip and handlebar end. Inspect all parts. If any are worn or damaged, replace them.

Assembly is essentially the reverse order of disassembly. If control coil has been removed from motorcycle make sure coil end plug (9) is correctly positioned in handlebar end with set screw registered in groove of end plug.

Apply a light coat of graphite grease or oil to control wire as it is inserted into coil. Insert two rollers (5) over roller pin (4), round side of roller up as positioned on motorcycle. Lubricate handlebar spiral with grease. See "REGULAR SERVICE INTERVALS," Section 1.

To start end screw (9) in handlebar, grasp grip sleeve assembly and apply slight pressure against screw as it is being started in handlebar end. This squares screw with end of grip sleeve, aligning threads. Tighten screw securely.

After throttle control is completely assembled, connect control coil and wire at carburetor. Adjust throttle control so carburetor throttle lever closes and opens fully with grip movement. There should be about 1/4 in. between end of throttle control coil and carburetor control coil clip when throttle lever is in fully closed position against its stop.

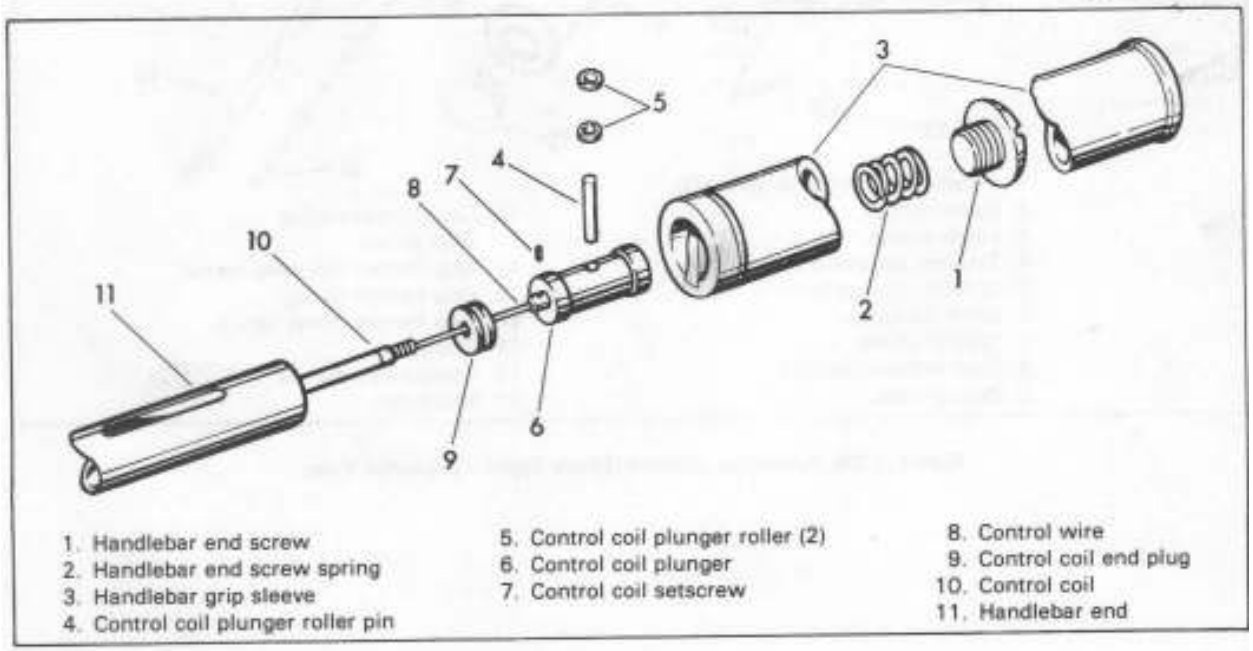

Figure 2-27. Handlebar Throttle Control (Spiral Type) - Exploded View

DRUM TYPE

GENERAL

Control must operate freely and carburetor throttle must return to closed (idle) position with friction adjusting screw (12, Figure 2-28) backed off. If control becomes stiff and does not return properly, it should be disassembled, cleaned and inspected.

DISASSEMBLING AND ASSEMBLING
(Figure 2-28)

Remove two control coil clamp screws (1), upper clamp (2), lower clamp (3). Unhook ferrule end of control wire (9) from grip assembly (4) which is free to come off handlebar end (17).

To remove cable (9), disconnect it at carburetor throttle lever, unsolder or cut off ferrule (16) and pull wire out of lower clamp (3). Parts 5, 6, 7, 8 and 10 are now removable. Replace a worn or bent control wire with a new one through parts 5, 6, 7 and 8 and install in casing (10) applying graphite grease to wire. Solder ferrule on wire flush with end of wire.

Apply a light coat of graphite grease to handlebar (17) end and inside surfaces of clamps (2 and 3). Connect ferrule end of wire to notch in drum and assemble grip (4) on handlebar between clamps. Be sure hole in friction spring (13) is in place on end of screw (12).

After assembling parts and connecting wire end to throttle lever, check for proper operation – that is, with friction screw (12) loosened, torsion spring on carburetor throttle shaft must return parts to closed throttle (idle) position.

With handgrip turned to throttle fully opened position adjust stop screw (11) using 2 MM hex (Allen) wrench to limit travel.

IMPORTANT

This should be done to prevent excessive pull, and possible wire ferrule breakage.

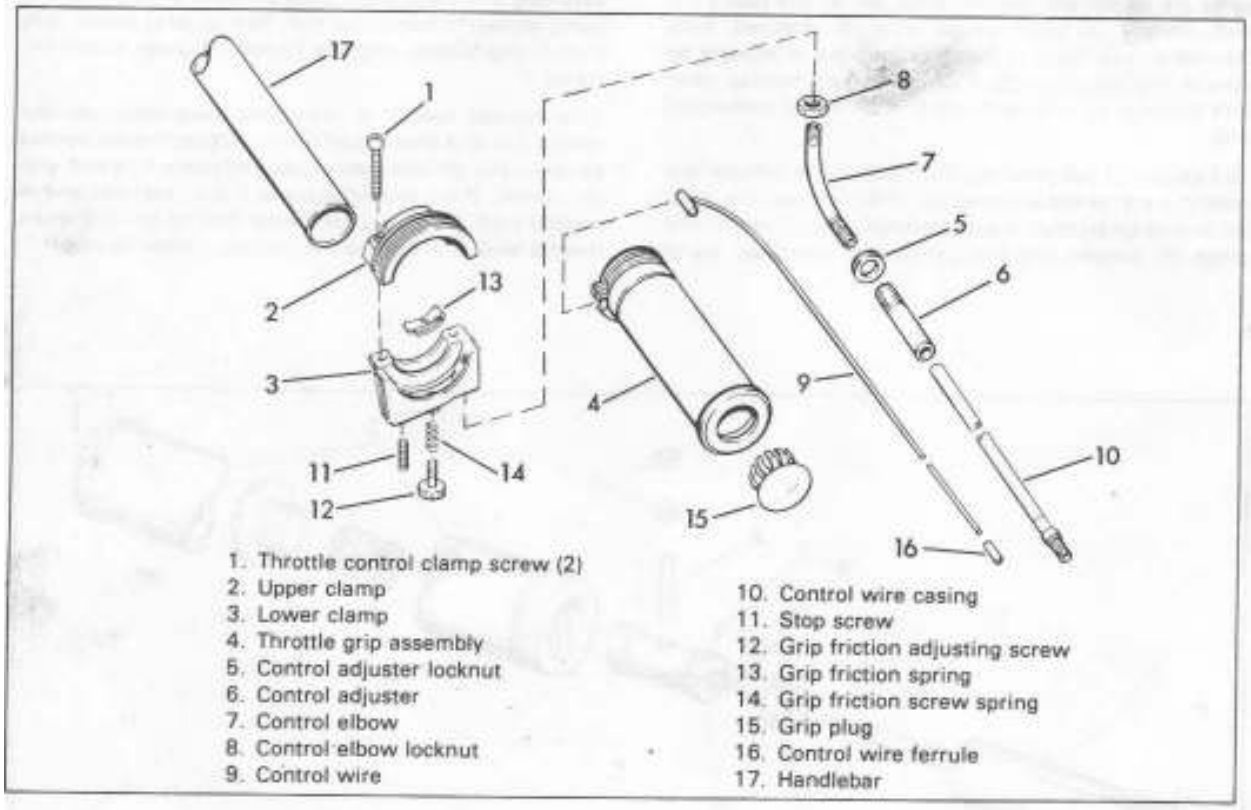

Figure 2-28. Handlebar Control (Drum Type) – Exploded View

FRAME

GENERAL

rough check a frame for correct alignment see Figures 29, 2-30. The dimensions shown will provide enough information to determine whether a frame is far enough out of alignment to require a major realigning job or replacement.

Because straightening a badly bent frame requires special tools and fixtures for holding, bending and gauging, this service is only offered by some of the larger dealerships.

CAUTION — A frame that is badly bent or damaged should be replaced since it is questionable that it can be repaired economically.

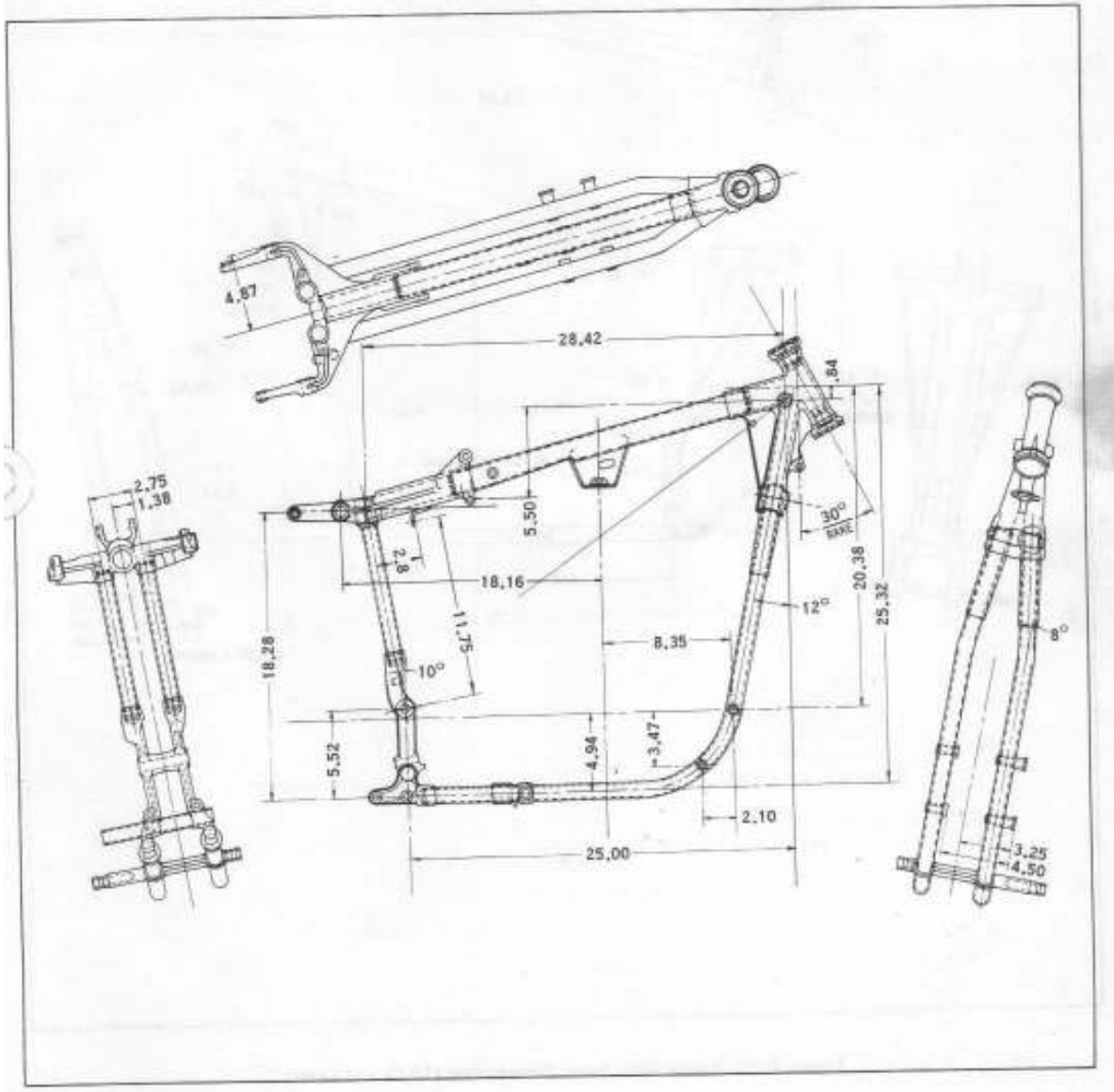

Figure 2-29. Frame with Basic Dimensions (1970-72)

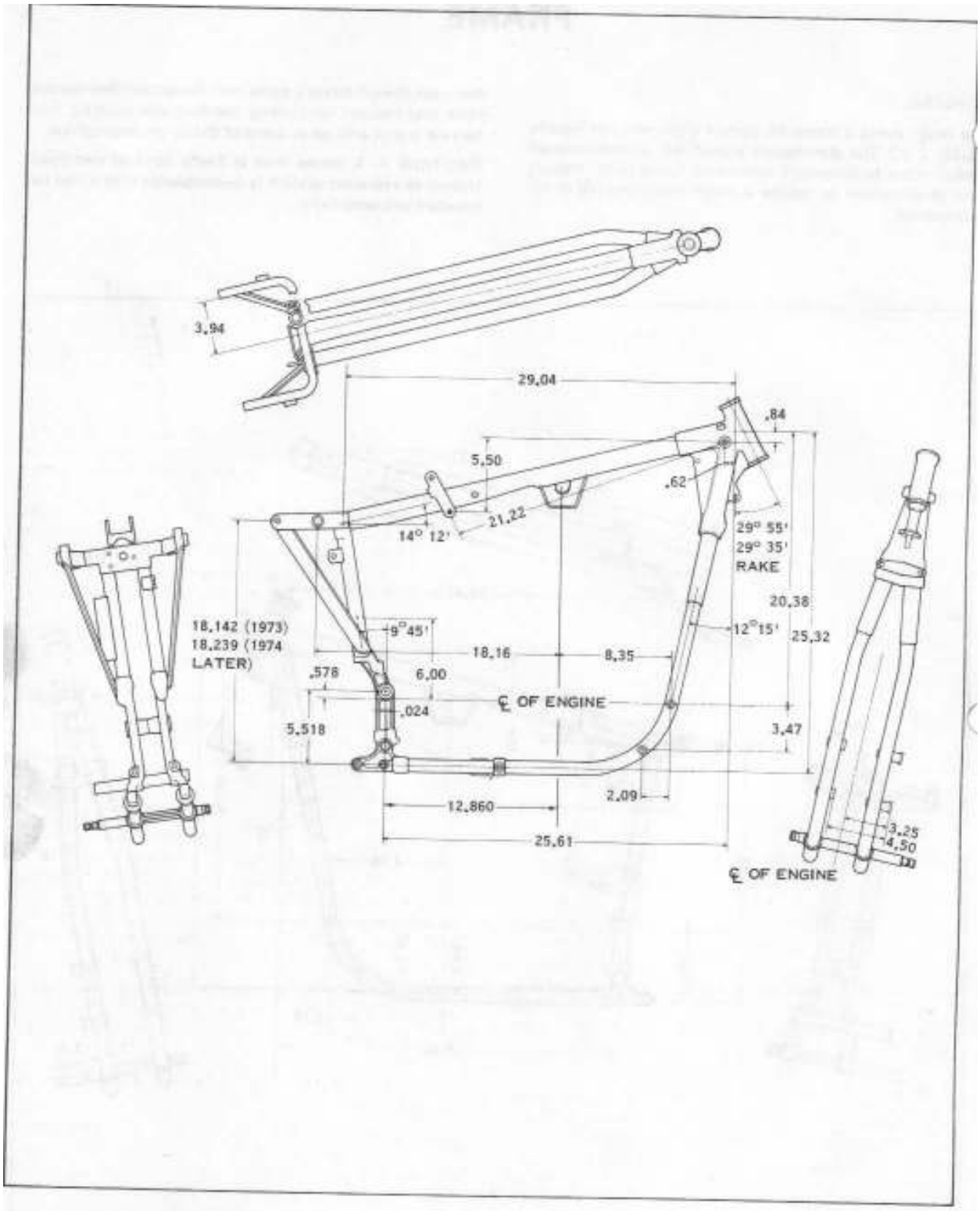

Figure 2-30. Frame with Basic Dimensions (1973 and Later)

FRONT FORK

CHANGING FORK OIL

The hydraulic fork is comprised of two sets of telescoping tubes that work against springs, with an oil filled (hydraulic) dampening mechanism to control the action. The unit is engineered to give long service with a minimum of repair. Oil change is not necessary on 1970-72 models unless oil has been contaminated or leakage has occurred. 1973 and later models require oil change initially at 500 miles and thereafter at 5000 mile intervals.

To drain fork sides, remove fork tube cap as described in "DISASSEMBLING FRONT FORK." Remove drain plug (29, Figure 2-31 or 15, Figure 2-36) from lower end of fork slider. Loosen tube end bolt (12, Figure 2-31 or 6, Figure 2-36) several turns. With a screwdriver move shock absorber up and down to loosen any sediment in bottom of fork slider, so oil will run free from drain.

After each fork side is drained and drain plugs have been installed, forks can be refilled by using an improvised filler can.

MAKING A FORK FILLER CAN

1. To make a filler can, see Figure 2-32 and proceed as follows. Drill a dozen 1/4 in. holes in the bottom of a one quart tin can (2), near the outside edge. Then, shape the bottom of the can with a light hammer so that it is dished upward to assure complete draining of oil through the holes.

Select a tin funnel (3) with the funnel mouth about the same size as the bottom of can (2). Swage and shape the funnel spout, so that a piece of 1/4 in. metal tubing (4), about 2 in. long (a piece of fuel line is suitable), can be soldered into it. Solder (3) into the bottom of (2). Improvise and attach bail (1) to the filler can.

3. Make plug (7) from a rubber bottle stopper purchased from a drug store. Rubber stopper should be 1 in. to 1-3/8 in. long, and its largest diameter about 5/8 in.

4. Hold rubber stopper in vise and drill a 3/32 in. hole lengthwise through the center. Then enlarge the hole with a 1/4 in. drill. After hole is drilled in the stopper, insert a 1/4 in. rod (6) through the hole and grind the stopper to a 5/8 in. diameter at the large end, and slightly under 1/2 in. diameter at the small end, straight taper between ends to form the plug.

5. Slightly flare one end of a piece of 1/4 in. tubing (6), about 2 in. long, and insert into plug (7). Make an adapter (8) from an old fork tube cap. Break three stake locks securing breather valve and remove valve from cap. Drill a 1/2 in. hole through cap and plug the vent hole. Assemble adapter (8) to top of fork and insert rubber plug (7) into the adapter hole. Attach filler can to stopper with transparent flexible tubing (5) about 2 feet long.

FILLING FORK USING FORK FILLER CAN

Suspend filler can above motorcycle so that when improvised fork tube cap is assembled in fork filler opening there will be ample slack in flexible tubing becoming taut (see Figure 2-33).

Pour correct amount of fork oil into can. The difference in the amount of oil required between a (DRY) and a (WET) fork is due to oil cling. Do not use more oil than recommended because the excess oil will cause leakage from the top of the fork tubes.

	Amount		Fork Oil
	Wet	Dry	
1972 and Earlier	5-1/2 oz.	6-1/2 oz.	Harley-Davidson Type B
1973 and Later	5 oz.	6 oz.	Harley-Davidson Type B

Work the fork up and down. Air escaping through oil in filler can as fork is pushed downward will cause the oil to bubble violently, but because the bottom of the filler can serves as a baffle, no oil will be lost. As the fork moves up, oil will be sucked into the fork side. Usually working fork up and down 3 or 4 times is sufficient to empty filler can. After filler can appears to be empty, it is good practice to allow a few seconds for can to completely drain into hose, then work fork once more. This assures getting all oil into the fork side.

SERVICING

INSPECTION PROCEDURE (Figures 2-31 and 2-36)

If the hydraulic fork does not work properly or an appreciable amount of oil leakage should develop, inspect the fork as follows:

Check the oil level in each fork side by completely draining and refilling fork as described in "CHANGING FORK OIL." Insufficient oil in either fork side will result in faulty recoil action and excess oil will cause leakage from the top of fork tubes. When checking oil level in each fork side, also check for water in fork oil which will cause leakage from fork tube cap or oil to bypass fork slider bushings and seals. Oil will appear emulsified, aerated or light brown in color.

Oil leakage developing at upper fork tube taper may also be caused by imperfect fit in fork bracket taper. This can be remedied by applying Harley-Davidson Seal-All to fork tube cap threads.

Check slider oil seals for wear or damage to lip which could cause oil leakage.

On 1972 and earlier models, if the fork does not function correctly after eliminating the possibility of water contamination of fork oil and incorrect oil level in fork sides, inspect the fork tube breather valve (2) for defective condition. Remove fork tube cap (1), submerge in water and blow compressed air through cap vent hole. Breather valve should not leak below 15 lbs air pressure. If breather valve is faulty, renew valve as described in "REPLACING BREATHER VALVE."

1. Tube cap
1A. Cap washer (1973-1974)
2. Tube breather valve (1972 and earlier)
3. Tube cap seal
4. Pinch bolt
5. Fork boot (1970)
5A. Fork boot (1971-1974)
5B. Retaining ring (1973-1974)
5C. Retaining washer (1973-1974)
5D. Seal (1971-1974)
6. Fork side
7. Spring retainer (1972 and earlier)
8. Fork tube and shock absorber assembly
9. Fork spring
9A. Spring guide (1972-1974)
10. Fork slider
11. Fork slider bushing (2) (1972 and earlier)
12. Tube end bolt and washer
13. O-ring (1972 and earlier)
14. Vent screw and plain screw (1970)
15. Boot retainer (upper) (1970)
16. Boot gasket (1970)
17. Boot retaining disc (1970)
18. Boot retainer (lower) (1970)
19. Stem sleeve end nut
20. Upper bracket pinch bolt
21. Upper bracket
22. Upper bracket spacer
23. Stem sleeve
24. Stem and bracket assembly
25. Upper bearing cone
25A. Upper bearing cone (1975 and later)
26. Lower bearing cone
27. Ball bearings (28)
27A. Bearing cone (1975 and later)
28. Steering head cups (2)
28A. Bearing race (1975 and later)
29. Drain plug and washer
30. Cover screw (2)
31. Insert
32. Cover

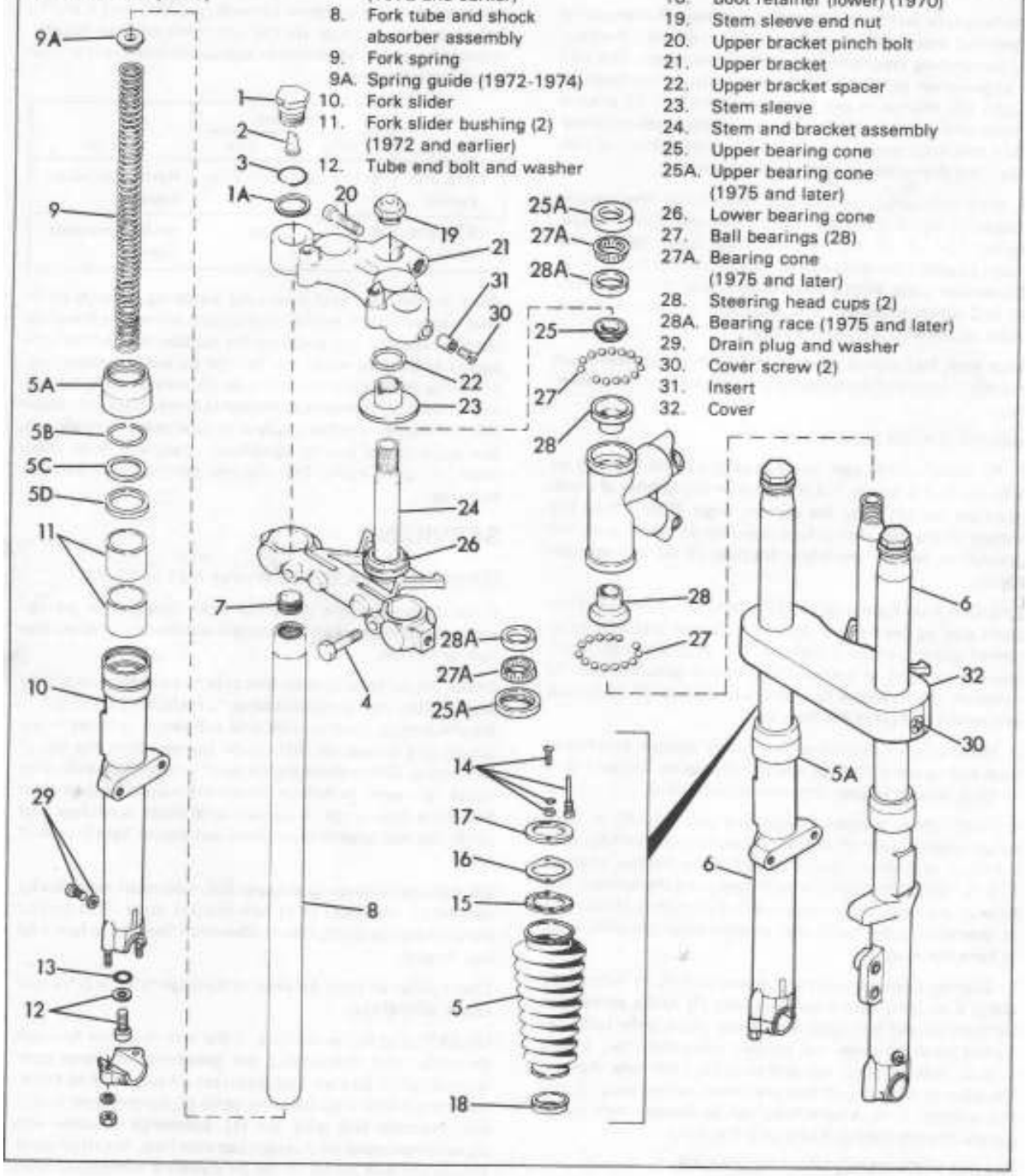

Figure 2-31. Front Fork and Steering Head - Exploded View

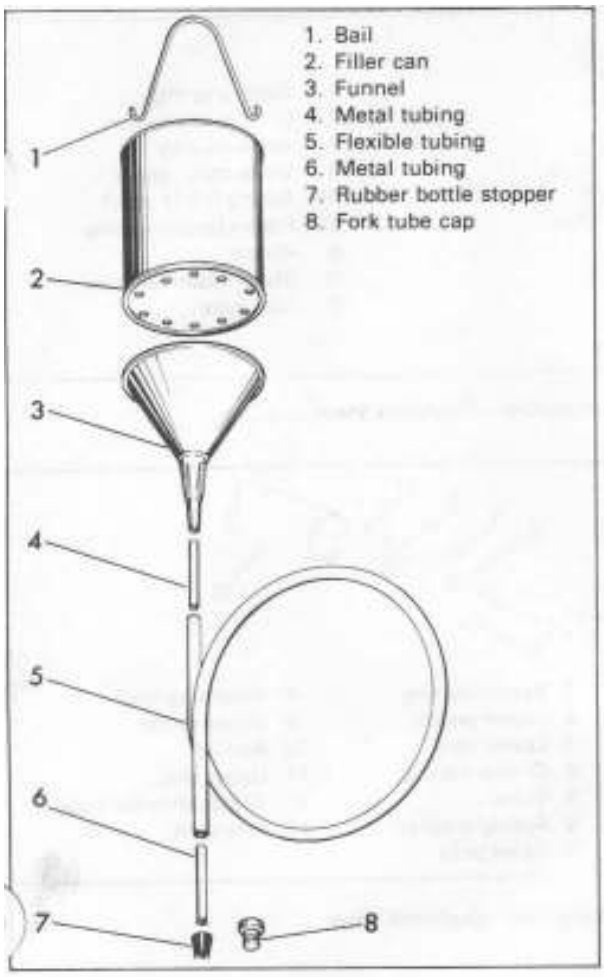

Figure 2-32. Fork Filler Can Components - Exploded View

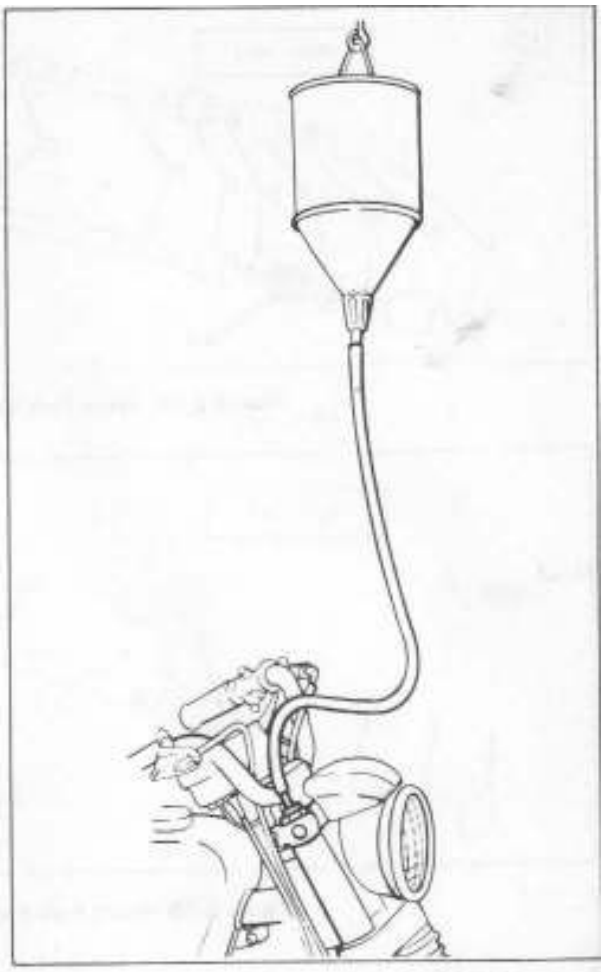

Figure 2-33. Filling Hydraulic Fork with Oil

If snubbing action of the front fork remains unsatisfactory, bottoms on compression, stops suddenly on recoil and does not operate smoothly after eliminating malfunctions previously covered, disassemble fork as described in "DISASSEMBLING FRONT FORK SHOCK ABSORBER." Inspect shock absorber giving particular attention to the following parts (see Figure 2-34 or 2-35): Check fit of damper piston in fork tube and fit on shock absorber tube. Check seating washer on upper and lower valve body faces. Replace worn or damaged parts.

NOTE

The front fork shock absorber parts for the 1975 and later fork are sealed in the bottom end of the fork tube and are non-serviceable.

See Figure 2-31. Examine fork tube (8) for scoring and badly worn sliding surface. Inspect fork slider bushings (11) in fork slider (10) for wear and scoring. Insert tube (8) in fork slider (10) and work up and down. If tube has appreciable play in slider, replace slider bushings. See "REMOVING FORK SLIDER BUSHINGS."

NOTE

1973 and later sliders do not have removable bushings. If slider is worn to excessive looseness on fork tube, slider must be replaced.

If the front fork has been damaged, check the fork alignment. Inspect fork tubes and the fork stem and bracket assembly (24) for bent or damaged condition. Tubes and fork stem and bracket assembly, that are badly damaged, must be replaced. If fork tube and fork stem and bracket assembly are only slightly damaged, they can be repaired as described in "STRAIGHTENING FORK TUBES," and "STRAIGHTENING FORK STEM AND BRACKET ASSEMBLY."

REPLACING 1972 AND EARLIER BREATHER VALVE (Figure 2-31)

Remove fork tube cap (1). Place in vise and break three stake locks securing breather valve (2). Free valve from cap. When reassembling, coat breather valve seat with a sealing agent. Seat rubber valve in cap and stake lock in three places.

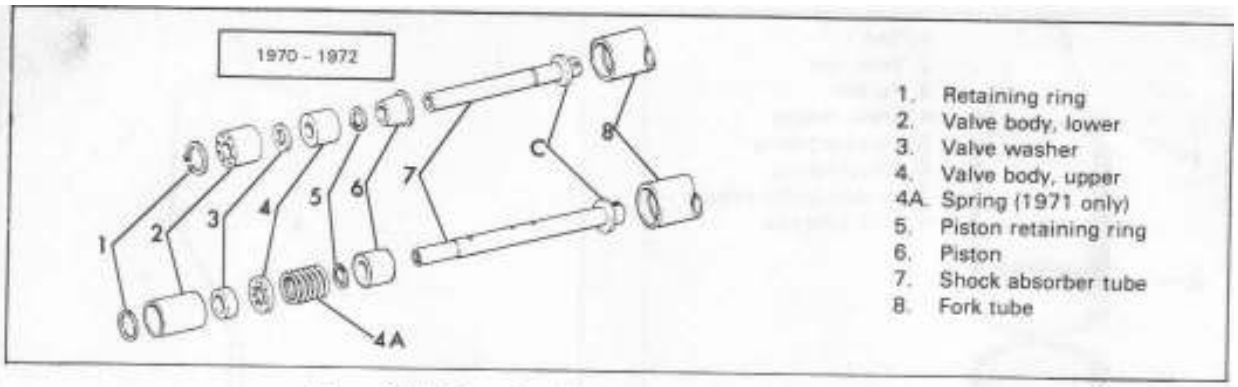

Figure 2-34. Front Fork Shock Absorber - Exploded View

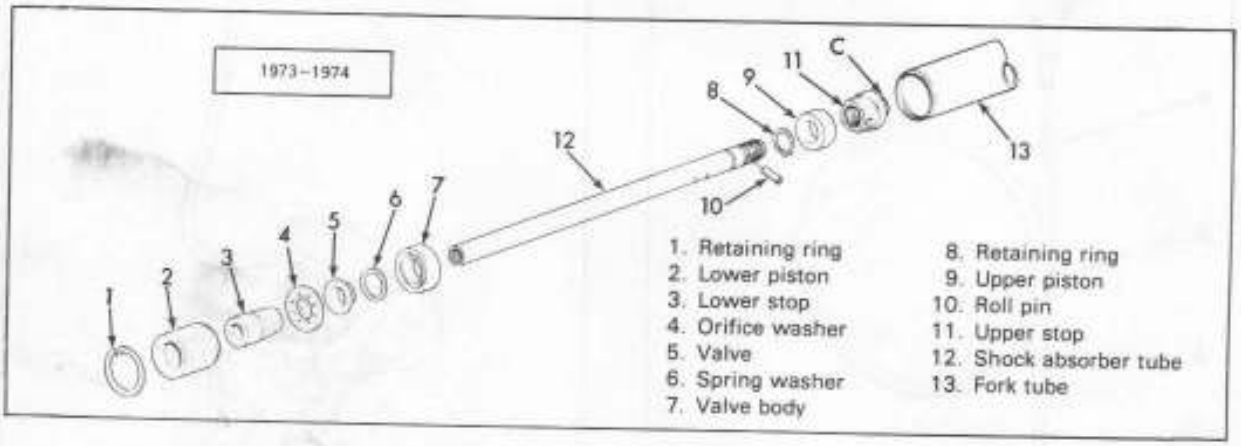

Figure 2-35. Front Fork Shock Absorber - Exploded View

REPLACING FORK BOOT PARTS (1970 ONLY) (Figure 2-31)

To replace fork boot parts that are damaged or worn, or to remove boot parts for straightening or replacement of fork stem and bracket assembly (24), proceed as follows: Stretch fork boot (5) from upper retainer (15). Free front fork sides from motorcycle as described in "DISASSEMBLING FRONT FORK." Remove fork boot plain screw and vent screw (14) and free retainer (15), gasket (16), and retaining disc (17). Lower retainer (18) is a light press fit in fork slider (10). Remove from slider by prying on retainer lip.

Assembly is the reverse order of disassembly. Start fork boot retainer by hand into the counterbore in upper end of fork slider. Insert the pilot end of Oil Seal Driver, Part No. 96310-55, through fork boot retainer and into the upper fork slider bushing. With a soft hammer, use very light blows to drive fork boot retainer to bottom against the end of fork slider.

NOTE

If fork tube slider bushings (11, Figure 2-31) are being replaced, install them before replacing lower fork boot retainer.

DISASSEMBLY AND REPAIR

DISASSEMBLING FRONT FORK (Figure 2-31)

Remove front wheel and brake assembly as described in "WHEELS," "REMOVING AND INSTALLING FRONT WHEEL."

Remove front fender and headlamp housing. Remove fork tube cap (1). Loosen fork tub pinch bolt (4). (On 1970 models, stretch rubber fork boot (5) from upper retainer (15) lip.) Remove fork side (6) complete. On 1972 and earlier models, use Wrench, Part No. 94694-52, and disassemble retainer (7) from top of fork tube (8). Remove spring (9) and drain hydraulic fork oil from fork tube. Turn assembly upside down and remove bolt and washer (12). It may be necessary to insert Tool, Part No. 95991-69 or a long screwdriver into 3/32 wide x 1/2 long slot C (Figure 2-34) in upper end of shock absorber tube to keep it from turning while removing bolt (12). On 1973-1974 models, use Socket, Part No. 94556-73 with extension on upper end of shock absorber tube C (Figure 2-35) to keep it from turning. Free slider (10) from tube (8).

DISASSEMBLING FRONT FORK SHOCK ABSORBER 1970 (Figure 2-34)

Shock absorber mechanism is part of fork tube (8). To disassemble, remove retaining ring (1) with Tru-arc Pliers, Part No. 96215-49, and remove lower valve body (2), washer (3) and upper valve body (4).

Remove shock absorber tube (7) and remove retaining ring and piston (6).

1971-1972 (Figure 2-34)

Remove parts as described for 1970 model including spring (4A) for 1971 model.

1973-1974 (Figure 2-35)

Remove retaining ring (1) from fork tube (13) with Tru-arc Pliers, Part No. 96215-49. Remove valve parts as follows: lower piston (2), lower stop (3), orifice washer (4), valve (5), spring washer (6), valve body (7), retaining ring (8) and upper piston (9). To disassemble upper piston (9), remove retaining ring (8) with Tru-arc pliers. To disassemble upper stop (11), remove roll pin (10) from shock absorber tube (12) and unscrew upper stop (11).

DISASSEMBLING, ASSEMBLING AND REPAIRING FRONT FORK – 1975 AND LATER (Figure 2-36)

Remove front wheel and brake assembly as described in "WHEEL" section of this manual. Remove front fender. Remove bracket that attaches headlamp to upper fork bracket and let hang loose by wiring harnesses.

NOTE

While Figure 2-31 applies to earlier models, parts (30, 32, 4 and 21) are similar and are referenced below.

Referring to Figure 2-31, remove two screws (30) so the cover (32) can be slid up out of the way, exposing the lower fork bracket. Loosen fork tube pinch bolts (4). Loosen screw (30) in upper fork bracket (21).

Remove the instrument (either the speedometer or tachometer) attached to tube cap (1), Figure 2-36, of the fork side being removed. Unscrew tube cap (1) from fork tube (2). Remove fork side completely by sliding down and out of both upper and lower fork brackets. Drain oil from fork.

Referring to Figure 2-36, disassemble the fork side as follows.

Remove O-ring (3) from inner groove in tube cap (1) and slide off washer (4). Pull spring (5) out of fork tube (2).

Using an Allen wrench, remove screw (6) along with washer (7) from bottom end of fork slider (8). This will free shock absorber tube (9) so that it can be removed from fork tube (2). Remove both fiber wear rings (10) from slots in shock absorber tube (9).

Separate fork tube (2) and fork slider (8) by pulling the two apart. Slip fork boot (11) off end of fork slider (8). Remove damper tube sleeve (12) from inside fork slider (8) by carefully pulling out past seal (14). Remove seal (14) only if it is to be replaced. Remove lock ring (13) and then pry out seal (14), discarding the damaged seal.

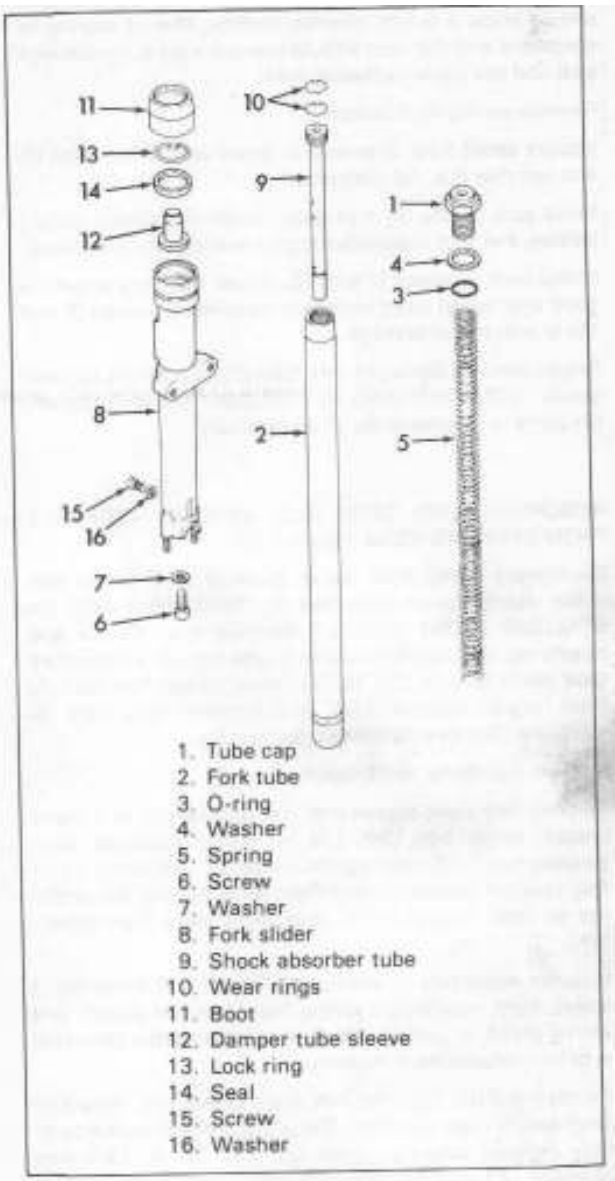

Figure 2-36. Front Fork and Shock Absorber, Exploded View – 1975 and Later

NOTE

To prevent damage to the lip of fork slider (8), the lip can be heated to expand the metal and thereby make seal removal easier.

Thoroughly clean and inspect each part. If inspection shows that any parts are bent, broken or damaged, those parts should be either repaired or replaced.

Inspect seal (14) for wear. If seal was removed, a new one must be installed. Inspect both wear rings (10) on damper tube (9) and replace if worn excessively or damaged.

Check boot (11) where it rubs on fork tube (2). The tube should show a bright, shining surface, free of scoring or abrasions and the boot should present a good, continuous seal and not show excessive wear.

Replace spring (5) if broken.

Inspect small hole in groove in lower end of fork tube (2) and see that it is not obstructed.

Make sure O-ring (3) is in good condition, without irregularities, and that it provides proper sealing when in place.

Check both washers (7 and 16) to see that they provide a good seal when used with their respective screws (6 and 15) to prevent oil leakage.

Repair bent or damaged fork tube (2) as outlined in paragraph "STRAIGHTENING FORK TUBES" below. Reassemble parts in reverse order of disassembly.

REMOVING FORK STEM AND BRACKET ASSEMBLY FROM STEERING HEAD (Figure 2-31)

Disconnect wires from panel. Remove front wheel and brake assembly as described in "REMOVING AND INSTALLING FRONT WHEEL." Remove front fender and headlamp housing. Remove fork tube cap (1). Loosen fork tube pinch bolt (4). (On 1970 models, loosen fork boot (5) from upper retainer (15) lip.) Remove fork side (6) complete. Remove handlebar clamp cover.

Remove headlamp and bracket as a unit.

Remove fork stem sleeve end (19) and loosen fork upper bracket pinch bolt (20). Lift handlebar assembly from steering head with fork upper bracket (21) attached. Carefully position assembly away from working area. Be careful not to bend control cables and wires more than necessary.

It is not necessary to disconnect clutch and brake hand levers from handlebar, wiring from ignition switch and wiring panel, or control cables, unless handlebar assembly is to be removed from motorcycle.

Remove washer (22) and fork stem sleeve (23). Free fork stem and bracket assembly (24) and at the same time carefully remove bearing cones (25 and 26 or 25A) and bearings (27 or 27A) from steering head. Inspect bearings, cones and cups for wear. If worn or pitted replace. If necessary to remove head cups (28 or 28A), insert a piece of bar stock through upper cup to drive against lower cup. Reverse operation to remove upper cup.

STRAIGHTENING FORK TUBES

Straightening fork tubes requires several special tools including a hydraulic or arbor press, dial indicator and straightening blocks (straightening blocks available for 1972 and earlier models only).

NOTE

Do not attempt to straighten a fork tube that has a sharp angle bend. These tubes should be scrapped because the metal is stretched.

Before beginning the straightening operation, clean the fork tube. Locate bends with a dial indicator as shown in Figure 2-37. (A fork tube is usually bent in two or three places – seldom one place.) Then, place fork tube on straightening blocks. Using an arbor or hydraulic press, straighten tube as much as possible as shown in Figure 2-38.

See Figure 2-37. With a dial indicator find the highest point out of round and mark with chalk. Press on high point of fork tube as shown in Figure 2-38. Repeat pressing operations until fork tube is within .003 to .004 in. of being straight. Always check with a dial indicator after each pressing operation.

Sometimes a fork tube is out of round, especially at the point it is clamped to the fork brackets. Place tube in straightening blocks as shown in Figure 2-39. Press until perfectly round and check with dial indicator or micrometer. Check fork tube by inserting into a new fork slider. Work tube up and down in slider, if it does not bind, it is straight.

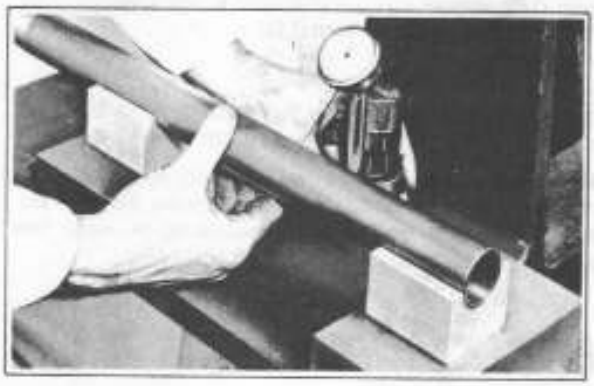

Figure 2-37. Indicating High Point

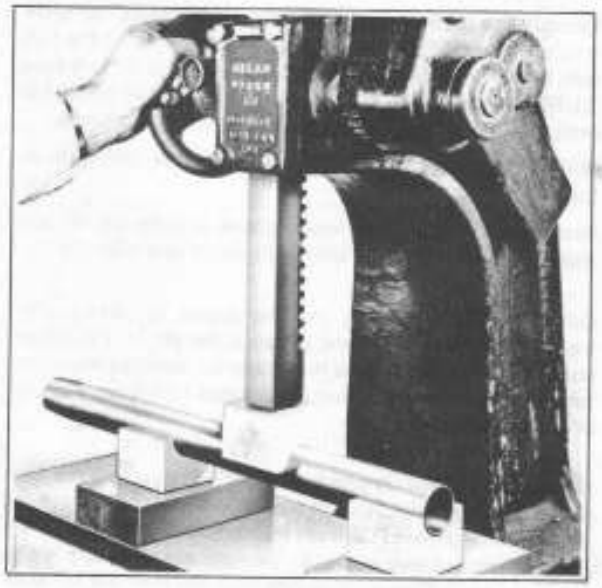

Figure 2-38. Pressing High Point

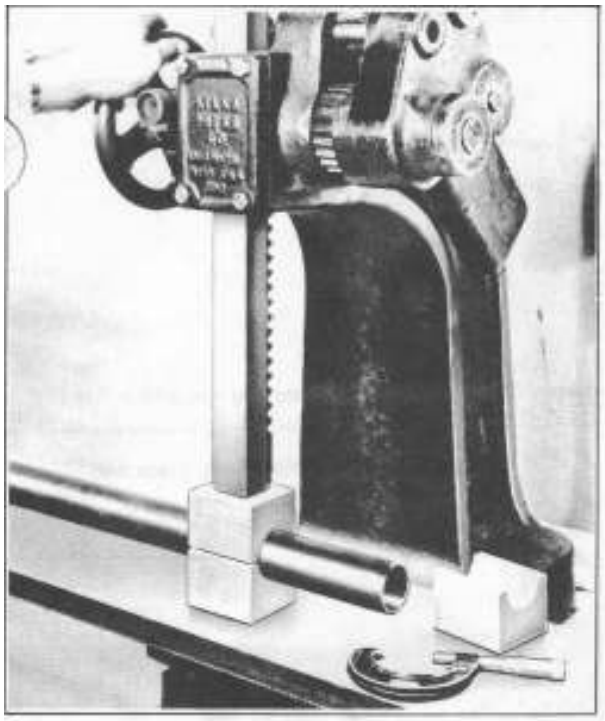

Figure 2-39. Pressing Fork Tube Round

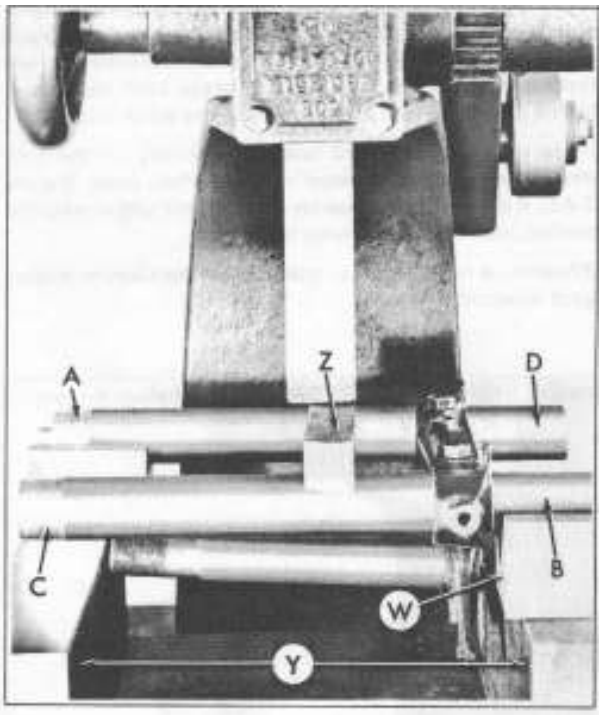

Figure 2-40. Straightening Fork Stem and Bracket Assembly

STRAIGHTENING FORK STEM AND BRACKET ASSEMBLY (Figure 2-40)

Straightening a fork stem and bracket assembly not only requires a great deal of practice to become proficient, but also several special tools and fixtures, including an arbor press, surface plate or suitable heavy metal plate that is perfectly smooth, bending bar, four straightening blocks (W), two improvised steel gauging bars or legs 1-5/16 in. diameter x 12 in. length (X, Figure 2-41), two steel support blocks (Y), and several steel press blocks (Z).

Do not attempt to repair fork stem and bracket assemblies that are badly bent or broken. These bracket assemblies should be scrapped.

Insert two steel gauging bars in the fork bracket and secure in place with two bracket pinch bolts as shown in Figure 2-40.

Sometimes the steel bars cannot be inserted into the bracket because the holes are distorted. In this case, press the bars into position using an arbor press. Then, press on the forward edge of bracket to correct "bow shaped" distortion (3) as shown in Figure 2-41. Repeat pressing operation until bar is loose in bracket. Secure in place with two pinch bolts.

A bracket assembly is usually out of alignment from a horizontal centerline (1) with both legs bent or just one leg bent. (See Figure 2-41).

If both legs are twisted, place bracket assembly in position in arbor press as shown in Figure 2-40. Place two straightening blocks under low legs (A and B). With press block (Z) placed straight across bracket assembly, press until legs (C and D) are forced down and into alignment with legs (A and B).

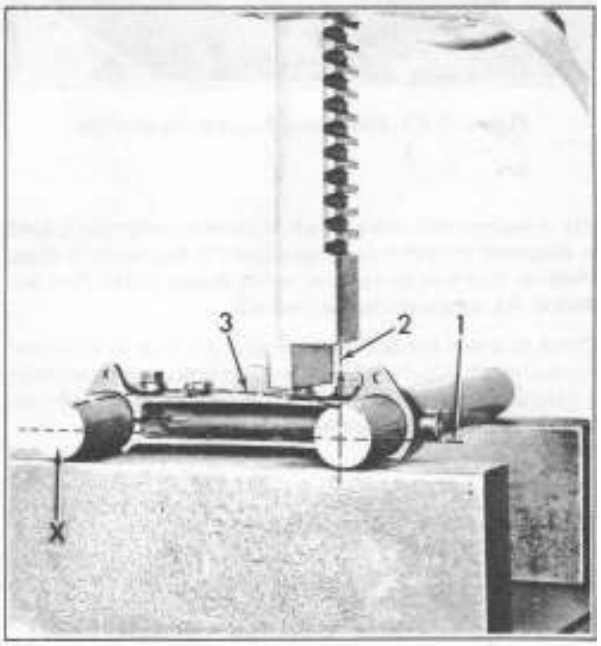

Figure 2-41. Correcting Bracket Bow

If one leg is bent, place bracket assembly on three straightening blocks, two blocks under straight leg and one block under the low leg. Place press block diagonally across bracket assembly to high leg and press until high leg is forced down and into alignment with the other three legs.

Place the fork stem and bracket assembly on the four straightening blocks located on the surface plate, (Figure 2-42). If the legs rest squarely on straightening blocks, the bracket assembly is correctly trued.

If bracket is not true, press again, checking alignment after each operation.

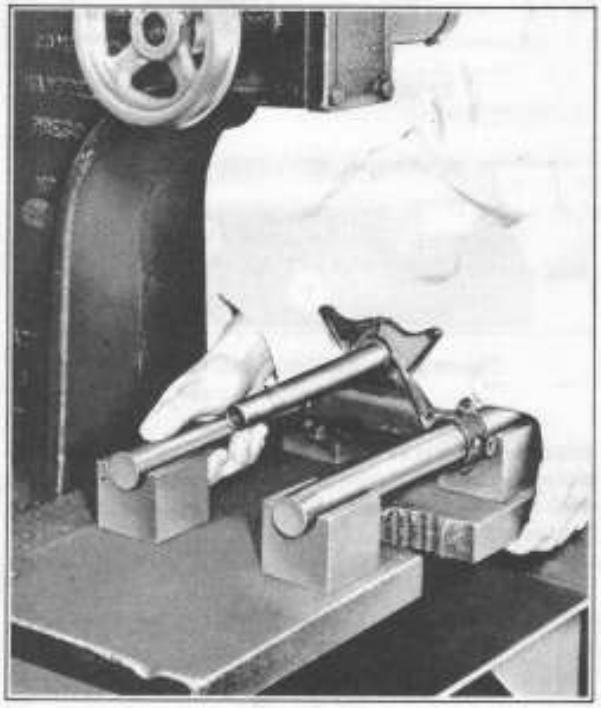

Figure 2-42. Checking Bracket Alignment

Use a square and check to see if bracket assembly is bent or distorted (to either side) as shown in Figure 2-43. If so, place in vise and straighten, using Bending Bar, Part No. 96806-40, as shown in Figure 2-43.

Check to see if the fork stem is straight, true on a vertical centerline (2, Figure 2-41) by using a fork upper bracket as a gauge (Figure 2-44). If not, place in vise and use Bending Bar to bring into position.

REMOVING FORK SLIDER BUSHINGS (1972 & EARLIER)

NOTE

1973 and later forks do not have removable bushings. If slider is worn to excessive looseness on fork tube, slider must be replaced.

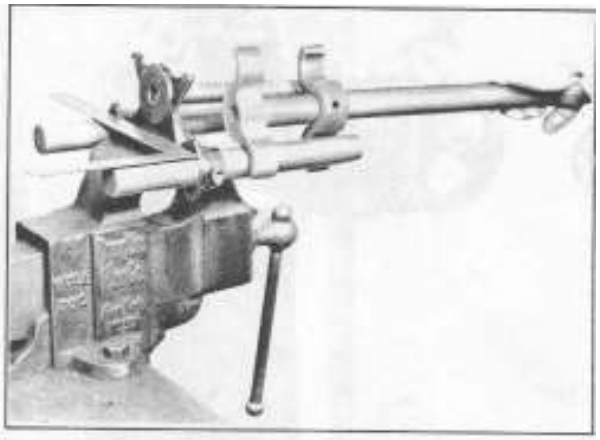

Figure 2-43. Bending Fork Stem and Bracket Assembly

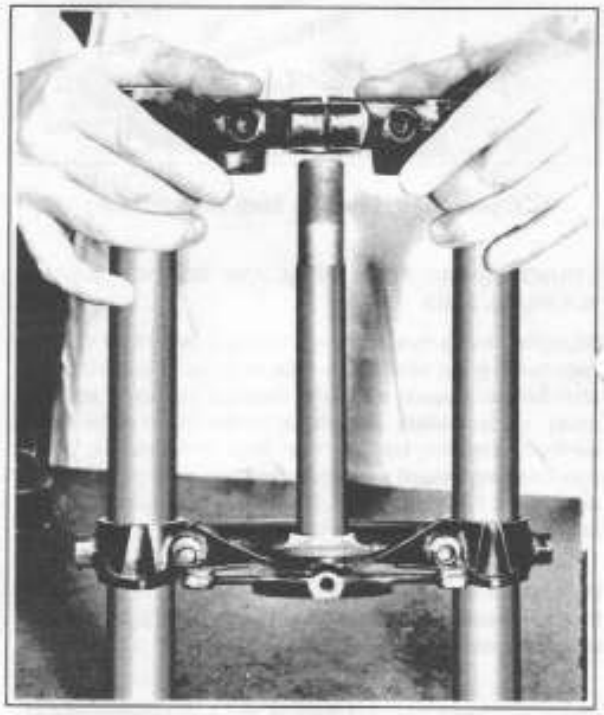

Figure 2-44. Gauging Fork Stem

Insert the fork slider bushing puller and cap (1, Figure 2-45) into the fork slider a sufficient distance to allow the claws to extend below lower end of the upper fork slider bushing (11, Figure 2-31). Place puller cap into oil seal counterbore. Apply oil to screw threads and steel thrust washer and turn nut down against puller cap to remove all slack from puller assembly. Use a Big Twin engine sprocket nut wrench and continue to turn nut against puller cap until bushing is removed (see Figure 2-46).

To remove lower fork slider bushing, follow same procedure used in removing upper fork bushing.

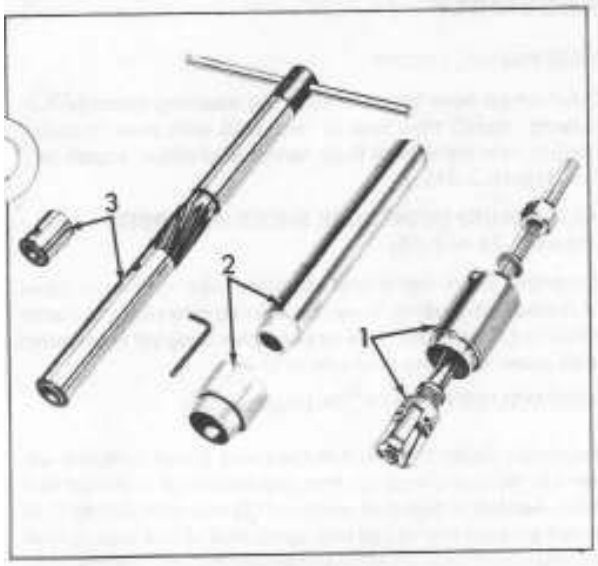

Figure 2-45. Fork Rebushing Tools

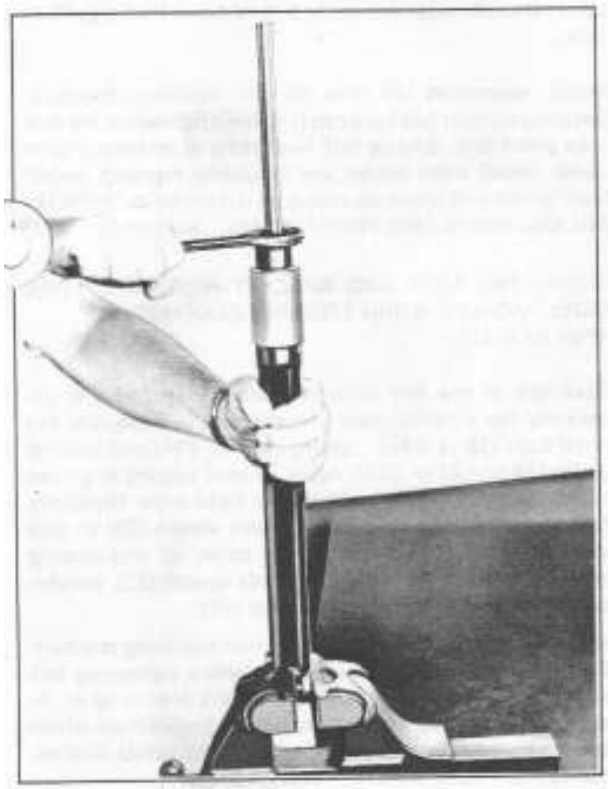

Figure 2-46. Removing Fork Slider Bushing

INSTALLING FORK SLIDER BUSHINGS (1972 & EARLIER)

Before installing new fork slider bushings (11, Figure 2-41), thoroughly clean slider bore and lubricate with engine oil. Fork bushing driver and guide (2, Figure 2-45) is used to install fork slider bushings as shown in Figure 2-47. Insert the bushing guide into the fork slider oil seal counterbore and insert the new lower fork slider bushing into the guide. The fork bushing driver has two grooves cut around its outside diameter which are used as depth gauges when driving in the bushings. The groove nearest the top of the driver is the depth gauge for the lower bushing, and the lower groove is the depth gauge for the upper bushing. The lower bushing is driven into the fork slider to the point where the upper groove on the bushing driver aligns with the top edge of the bushing guide.

NOTE

If the lower bushing is driven into the fork slider farther than specified, it will contact the bottom of the counterbore at lower end of fork bushing and bushing may be collapsed to the extent that it cannot be finish reamed.

When installing upper fork slider bushing, follow the same procedure used to install lower fork slider bushing. The upper fork slider bushing is driven into the fork slider the correct depth when the lower groove on the bushing driver is aligned with the top edge of the bushing guide.

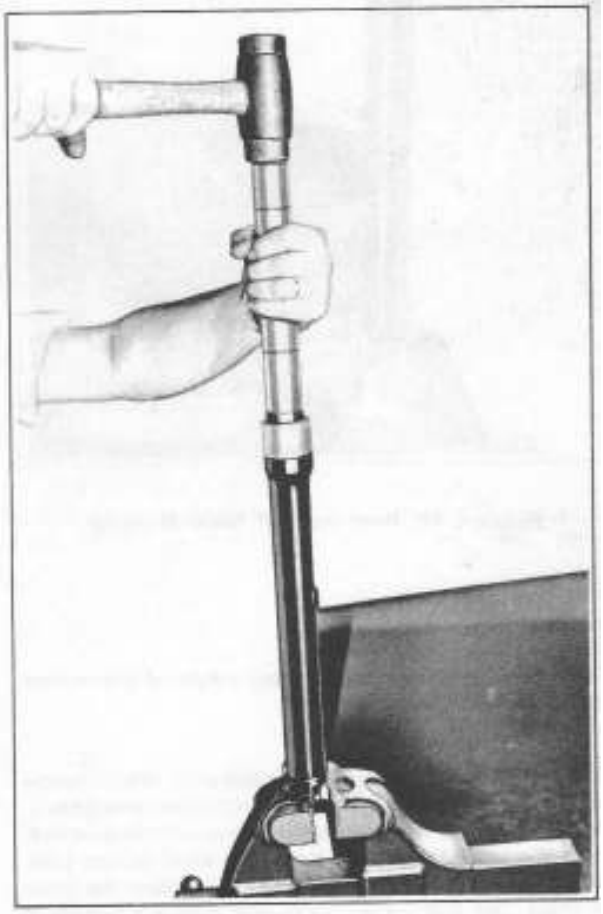

Figure 2-47. Installing Fork Slider Bushing

REAMING FORK SLIDER BUSHINGS
(1972 & EARLIER)

Figure 2-48 shows reamer with long pilot attached as required for reaming upper bushings to finish size. The long pilot is of correct size to fit into the unfinished lower bushing and guide the reamer through the upper bushing.

Figure 2-48. Reaming Fork Slider Bushing

CAUTION — Do not drop cutting edges of the reamer into bushing.

Slowly start cut, turning reamer clockwise. When removing reamer after bushing is reamed, continue turning clockwise and apply a slight upward pressure to remove reamer from the finished bushing. Install the short reamer pilot, shown under 3, Figure 2-45 on reamer to ream the lower bushing. The Allen wrench provided with the tool set is used to tighten or loosen reamer pilots on the reamer body.

ASSEMBLY

ASSEMBLING SLIDER

Clean chips from inside of slider by washing thoroughly in solvent. Install new seal (if required) with seal lip facing inward, and top of seal flush with top of slider. Install boot (5A, Figure 2-31).

ASSEMBLING FRONT FORK SHOCK ABSORBER
(Figure 2-34 or 2-35)

Assemble parts into shock absorber tube in reverse order of disassembly using Tru-arc retaining ring pliers to install rings in grooves. Be sure upper valve body (4) is installed with outer lip fitting over spring (4A).

ASSEMBLING FRONT FORK (Figure 2-31)

Assemble slider (10) on fork tube and shock absorber assembly (8) and check for free movement of slider on fork tube. Assemble bolt and washer (12) and new O-ring (13). Insert screwdriver or rod into upper end of fork tube to hold slotted end of tube (8) while tightening bolt and washer (12). Insert spring into fork side and pour specified amount of fork oil into each fork side. Using Wrench, Part No. 94694-52, install spring retainer (7) into fork tube. The top of the retainer should measure exactly 3/4 in. down from top of fork tube.

Install assembled fork side (6) into mounting brackets. Securely tighten fork tube cap (1) before tightening the fork tube pinch bolt. Secure fork boot in lip of retainer (15) (if used). Install front fender and headlamp housing. Install front wheel and brake assembly as described in "REMOVING AND INSTALLING FRONT WHEEL," Section 2.

INSTALLING STEM AND BRACKET ASSEMBLY, FORK SIDES AND ADJUSTING STEERING BEARINGS
(Figures 2-31)

Assembly of the fork stem and bracket assembly is essentially the reverse order of disassembly. Assemble the head cups (28 or 28A), bearings (27 or 27A) and bearing cones (25 and 26 or 25A). Apply a heavy coating of grease to the bearings when positioned in head cups. Install the fork stem (24) and tighten fork stem sleeve (23) on fork stem until all appreciable play is taken up and bearing action is smooth and free. Assemble spacer (22), handlebar assembly and upper fork bracket (21).

Install fork sides (6) after assembly into mounting brackets. Securely tighten fork tube cap (1) before tightening fork tube pinch bolts to 35 ft-lbs. Secure fork boot in lip of retainer (15) (if used). Install front fender. Install front wheel and brake assembly as described in "REMOVING AND INSTALLING FRONT WHEEL," Section 2.

With fork sides, wheel and fender reassembled, fork should have smooth free movement to either side. If there is any binding, slightly back off the fork stem sleeve (23) until it is correctly adjusted. Be sure not to back it off too much – as there should be no appreciable shake or sideways movement of the front fork. Install and securely tighten the sleeve end nut (19) and the upper bracket pinch bolt stem (20). Torque bolt (20) to 20-25 ft-lbs.

REAR SHOCK ABSORBER

DISASSEMBLING

Raise rear end of motorcycle with stand or suitable blocking underneath frame.

NOTE

If blocking is not available work on only one shock absorber at a time, the other shock absorber will hold the rear fork and frame in place.

(Figure 2-49): Remove top and bottom mounting stud nut (1), washer (2), stud cover (3), and washer (4). Slip shock absorber assembly off upper and lower studs. Push rubber bushings (5) from shock absorber mounting eyes. Place shock absorber in Rear Shock Absorber Tool, Part No. 97010-52A (see Figure 2-50) with split key (6) up. Compress absorber spring enough to remove each half of split key (6) from flange on shock eye. Release spring compression and remove absorber assembly from tool. Remaining items can be removed in order shown in Figure 2-49.

INSPECTING

Clean and inspect all parts for wear and damage, paying particular attention to the condition of the stud rubbers, the ride control adjustment cams, dirt seal, and spring. Examine absorber unit for traces of fluid leaking, especially at upper end. Unit should compress slightly easier than it extends. If possible, compare action with unused unit. Shock absorber cannot be repaired. Faulty units must be replaced.

ASSEMBLING

Assembly of the rear shock absorber is essentially the reverse order of disassembly.

(Figure 2-49): Apply a thin coat of grease to all surfaces of both cams. Note that cams (13) are identical and be sure to position cam lobes correctly as shown in Figure 2-49 inset. Place assembly in compressor tool and compress spring enough to install key halves (6).

Release spring compression. Keys will lock into place in inside diameter of covers 7 or 8.

ADJUSTING SPRING

The rear shock absorber springs can be adjusted to three positions (five positions for 1978) for the weight the motorcycle is to carry. The average weight solo rider would use the extended spring position (off cam); when in low position (off cam), the cam lobes should be next to each other: that is, single lobes and double lobes matched. If necessary, rotate the cam to line them up properly. A heavy solo rider might require the position with springs slightly compressed (spring position second cam step).

To adjust the rear shock absorber springs, turn cushion spring adjusting cam to desired cam position with either Spanner Wrench, Part No. 94700-52B for 1974 and earlier or Spanner Wrench, Part No. 94820-75 for 1975 and later. Both cushion spring adjusting cams must be adjusted to the same position. Always back off cam in opposite direction when releasing spring tension to intermediate or solo position.

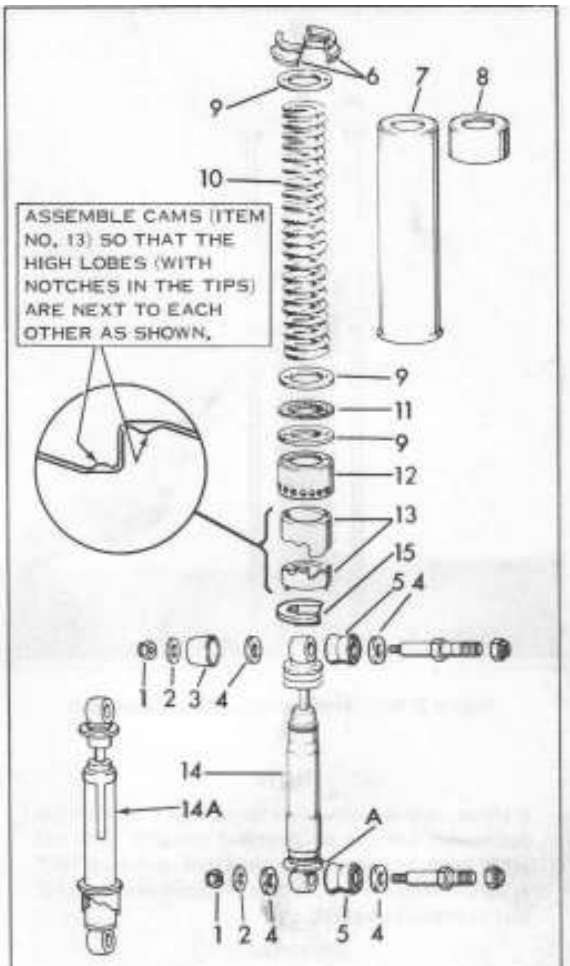

1. Mounting stud nut (2)
2. Washer (2)
3. Stud cover
4. Washer (4)
5. Stud rubber bushing (2)
6. Split key
7. Cover (long)
8. Cover (short)
9. Washer (3, low road clearance), (2, high road clearance) (1974 and earlier)
10. Spring (1974 and earlier)
11. Seal washer (low road clearance) (1974 and earlier)
12. Adjusting cup (1974 and earlier)
13. Cam (2) (1974 and earlier)
14. Shock absorber unit (1974 and earlier)
14A. Shock absorber unit (1975 and later)
15. Cam support (1973 and 1974)

Figure 2-49. Rear Shock Absorber - Exploded View

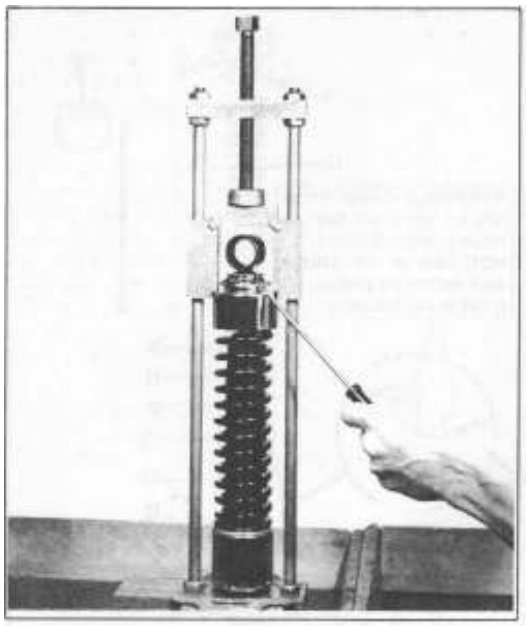

Figure 2-50. Compressing Shock Absorber

NOTE

If shock cam is turned too far so that it falls off top position it will not be matched correctly with the other cam. To correct this condition, continue 180° in same direction until it falls off again and then adjust to desired position.

IMPORTANT

Install each shock absorber on motorcycle with slot in cam support (15, Figure 2-49) facing toward motorcycle wheel.

REAR FORK

DISASSEMBLING (Figure 2-51)

Remove the rear wheel as described in "REMOVING AND INSTALLING REAR WHEEL." Free brake rod from operating lever and remove brake assembly from motorcycle. Remove exhaust pipe and muffler. Disconnect shock absorbers from rear fork.

See order of disassembly, Figure 2-51. Remove pivot bolt (1) and lockwasher (2) from rear fork (3). Rear fork can now be disassembled from frame. Remove the following parts: Bearing screw (4), bearing shakeproof washer (5), bearing lockwasher (6), bearing locknut - right (7) and bearing outer spacer (8). With a punch turn out bearing locknut - left (9) and remove pivot bolt nut (10). From inside of fork press or drive out bearing inner spacer (11) and bearing (12), by applying pressure against spacer (11). Press or drive out bearing shields (13) from fork inner side.

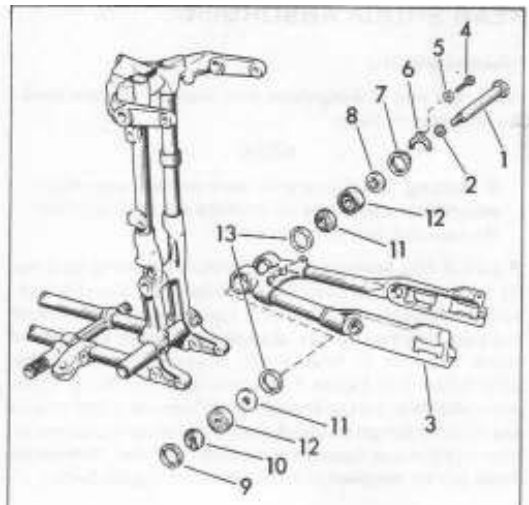

1. Pivot bolt
2. Bearing lockwasher
3. Rear fork
4. Bearing screw
5. Shakeproof washer
6. Lockwasher
7. Bearing locknut - right
8. Outer spacer
9. Bearing locknut - left
10. Pivot bolt nut
11. Bearing inner spacer (2)
12. Bearing (2)
13. Bearing shield (2)

Figure 2-51. Rear Fork - Exploded View

CLEANING AND INSPECTING

Before reassembling, clean and inspect all parts. Rough check the rear fork for correct alignment. Dimensions shown in Figure 2-52 will provide enough information to determine if fork is far enough out of alignment to require realigning or replacement. Straightening a badly bent rear fork requires special tools and fixtures for holding, bending and gauging.

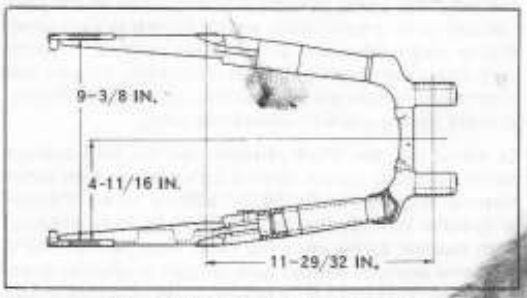

Figure 2-52. Rear Fork Dimensions

Check the rear fork bearings. If the inner or outer bearing race is badly pitted, replace bearing assembly.

ASSEMBLING (Figure 2-51)

Assembly is essentially the reverse order of disassembly. Attention should also be given to the following instructions:

From outside of fork press or drive bearing shield (13) into position, flush with inner fork side. From outside of fork insert bearing spacer (11), shoulder facing in. Apply a heavy coating of grease to bearing (12).

NOTE

Pack the two rear fork pivot bearings with fresh grease at 10,000 mile intervals.

With wide side of bearing outer race facing out, tap bearing into fork until flush with inner fork side.

Insert bearing outer spacer (8), shoulder facing in. Assemble and tighten bearing locknut – right (7), and then back off one full turn. Insert pivot bolt nut (10). With a punch, tighten bearing locknut – left (9) until snug. Stake lock in three places. Position rear fork in place on motorcycle and at the same time position pivot bolt nut (10), shoulder in crankcase recess. With lockwasher (2) in place, coat pivot bolt (1) with grease. Insert in rear fork assembly and tighten securely.

Weigh the extreme rear end of fork by attaching spring scale and raising fork to horizontal position with centerline of frame. Take scale reading and tighten locknut – right (7) sufficient amount to provide from one to two pounds drag on the bearing. For example, if rear end of fork weighs three and one-half pounds with bearings free, bearings should be adjusted tight enough to increase weight of fork to four and one-half or five and one-half pounds as fork is lifted to horizontal position. Assemble screw (4), washer (5), and lockwasher (6).

Install shock absorbers, exhaust pipe and muffler. Install brake assembly and rear wheel. Insert brake rod in operating lever and adust brake as described in "ADJUSTING REAR WHEEL BRAKE."

GENERAL

The front wheel brake is operated by a hand lever on the right handlebar side, and the rear wheel brake is operated by a foot pedal. To keep mechanical brakes in proper operating condition, it is essential to check adjustment of brakes at regular service intervals of 5000 miles, or sooner, depending on wear of brake linings and drums. See adjustment of brakes and centering brake shoes. If brakes do not operate satisfactorily after adjustment of linkage and recentering brake shoes in drums, disassemble and service brakes and connecting linkage. Hydraulic disc brake (1973 and later) is self-adjusting. Brake fluid level in master cylinder should be checked every 1000 miles.

On 1974 and later models rear brake lining can be inspected through view ports (6, Figure 2-54) to determine amount of lining wear.

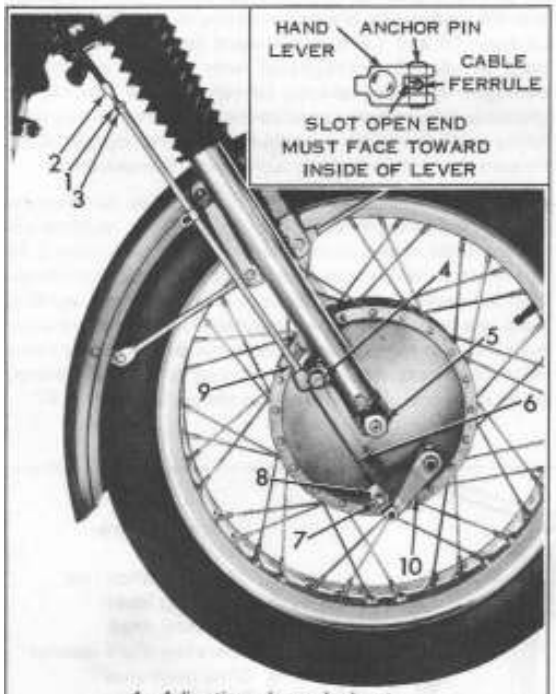

1. Adjusting sleeve locknut
2. Front brake adjusting sleeve
3. Adjusting sleeve nut
4. Brake shoe pivot stud
5. Front wheel axle nut
6. Brake cable
7. Brake cable clevis clamp nut
8. Brake cable clevis clamp
9. Brake cable support tube
10. Brake lever

Figure 2-53. Front Brake (1972 and Earlier)

DRUM BRAKES

ADJUSTING FRONT BRAKE (Figure 2-53)

When the front wheel brake is properly adjusted, the hand lever will move freely about one-quarter of its full movement before the brake starts to take effect. If adjusted tighter the brake may drag. To adjust brake, loosen locknut (1) on adjusting sleeve (2) and turn sleeve nut (3) in toward the cable support tube to decrease the free movement of hand lever and tighten the brake. Turn sleeve nut (3) away from the cable support tube to increase the free movement of hand lever and loosen the brake. When free movement of the hand lever is about one-quarter of its full movement, tighten locknut (1) against adjusting sleeve nut (3). Rotate the wheel to make sure brake is not too tight and dragging. If brake should drag with correct free movement in hand lever, recenter brake shoes in brake drum as follows:

Loosen, but do not remove, front brake shoe pivot stud (4) and axle nut (5). Spin front wheel. While wheel is turning apply brake and tighten pivot stud (4) and then axle nut (5). Recheck brake for correct adjustment as described above.

ADJUSTING REAR BRAKE (Figure 2-54)

To adjust rear wheel brake turn adjusting nut (1) to change the effective length of the brake rod (2) (1972 and earlier), or cable (1973 and later). The adjusting nut has a notch which fits against the clevis pin in the operating lever (3). Thus, it is locked in place on the rod, but may be turned down or backed off the rod by half turns as required. Set the adjusting nut so that the brake begins to take effect when the foot lever is pushed downward about 1-1/4 in.

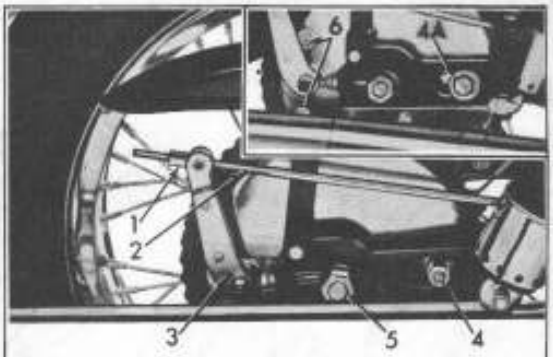

1. Brake rod adjusting nut
2. Brake rod
3. Operating lever
4. Brake shoe pivot stud nut
4A. Brake shoe anchor bolt
5. Rear wheel axle nut
6. Brake lining view port

Figure 2-54. Rear Brake (1972 and Earlier)

Turn the nut onto the rod to tighten the brake; back it off to loosen the brake. Turn the wheel to be sure the brake is not too tight and dragging. If brake should drag with correct free movement in foot pedal, recenter brake shoes in brake drum as follows:

Loosen but do not remove rear brake pivot stud nut (4) or bolt (4A) and axle nut (5). Spin rear wheel. While wheel is turning apply brake and tighten pivot stud nut (4) or bolt (4A) and then the axle nut (5). Recheck brake for correct adjustment, as previously described.

REPLACING FRONT BRAKE CABLE (Figure 2-53)

If the front wheel brake cable (6) is not free in its housing, is frayed or broken, replace cable. Remove clevis clamp nut (7) and clamp (8). Free cable from clevis and pull from upper end of coil. Install new cable from upper end of housing as positioned on motorcycle, applying a light coat of grease as it is inserted into coil. When reassembling cable ferrule in hand lever anchor pin with side slot, be sure slot is toward inside as shown. Earlier type pin with slotted end should have open end facing downward.

To correctly adjust brake cable turn adjusting sleeve lock-nut (1) and adjusting sleeve nut (3) to the top of brake adjusting sleeve (2). Make sure brake cable end is correctly positioned in brake lever slot, control coil ferrule is correctly positioned in hand lever bracket slot, and the brake cable support tube (9) is positioned in the fork slider bracket. Take all slack out of brake cable by pulling at the lower end of cable. With front brake lever (10) in lowest position (brake released), loop cable (6) around clevis and secure in place with clevis clamp (8) and nut (7). Adjust brake as described in "ADJUSTING FRONT WHEEL BRAKE."

DISASSEMBLING FRONT BRAKE
(1972 AND EARLIER) (Figure 2-55)

Remove front wheel and brake assembly from motorcycle as described in "REMOVING AND INSTALLING FRONT WHEEL." Remove operating shaft nut (2) and operating lever (3). Lightly tap operating shaft (4) to remove brake shoes (8), springs (9), operating shaft (4), washer (5) and pivot stud (6) as a unit from brake side plate (7). Remove shoes from operating shaft (4) and pivot stud (6).

DISASSEMBLING REAR BRAKE (Figure 2-56)

Remove rear wheel from motorcycle as described in "REMOVING AND INSTALLING REAR WHEEL." Section 2. Remove rear brake rod adjusting nut (1) and free brake rod (2) from operating lever (3). Remove brake assembly from motorcycle. Remove operating shaft nut and washer (4), operating lever (3), pivot stud nut and lockwasher (5) or anchor bolt and washer (5A) and locating block (6) or spacer (6A). Lightly tap operating shaft (7) to remove brake shoes (8), springs (9), pivot stud (10 or 10A), operating shaft (7) and washer (11) as a unit from brake side plate (12). Remove shoes from operating shaft (7) and pivot stud (10).

INSPECTING AND REPAIRING BRAKES
(Figures 2-55 and 2-56)

Clean and inspect brake shoes and linings (8) for wear, loose rivets, glazing, or imbedded particles. Brake shoes that are badly worn, cracked or damaged must be replaced. Linings (10 and 13) that are worn down to rivet heads, hard or glazed, impregnated with grease, cracked or damaged, must be replaced. Linings that are only slightly glazed and in apparent good condition may be reused after being roughened with a medium grade of sandpaper. Also, be sure to roughen braking surface of the brake drum.

If replacement of brake linings is necessary, new linings can be riveted to the old shoes, or, if riveting facilities are not available, brake shoes and linings can be renewed. To reline old shoes remove and discard old rivets and linings. Position new lining on brake shoe and head rivets, working from one end to the other to achieve a tight fit and avoid buckling. If a riveting machine is not available, set rivets with hand tools. After riveting linings to the brake shoes, bevel each end of brake lining as shown in Figure 2-57.

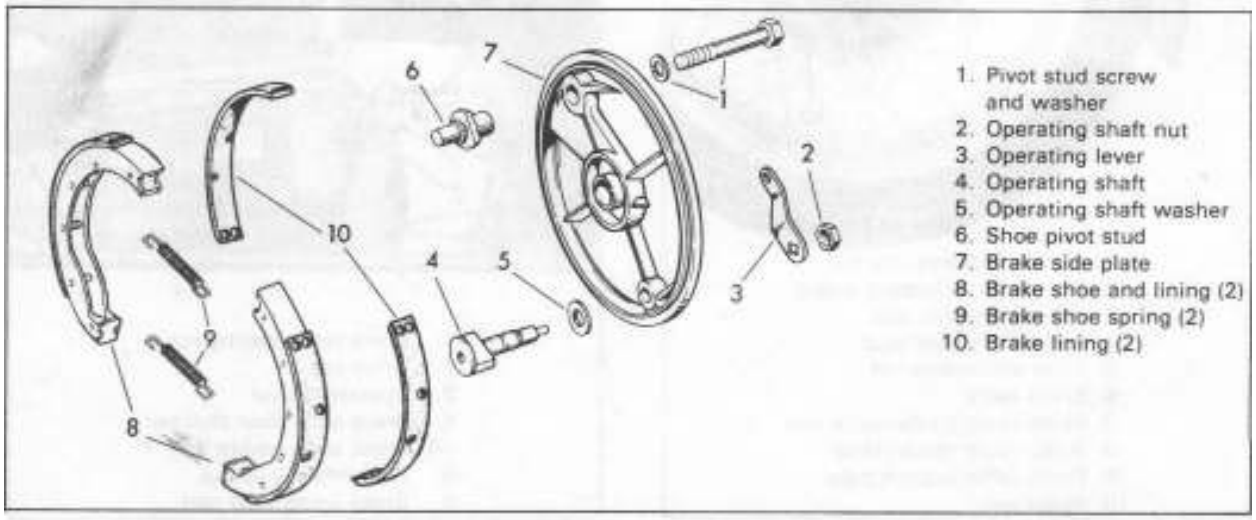

Figure 2-55. Front Brake (1972 and Earlier) - Exploded View

1. Brake rod adjusting nut
2. Brake rod
3. Brake operating lever
4. Operating shaft nut and lockwasher
5. Pivot stud nut and lockwasher (1972 and earlier)
5A. Anchor bolt and washer (1973)
6. Locating block (1972 and earlier)
6A. Spacer (1973)
7. Operating shaft
8. Shoe and lining (2)
9. Shoe spring (2)
10. Pivot stud (1972 and earlier)
10A. Pivot stud (1973)
11. Operating shaft washer
12. Brake side plate
13. Brake lining (2)
14. Cross shaft (1974 and earlier)
15. Rod clevis cotter pin and washer (1974 and earlier)
16. Rod clevis pin (1974 and earlier)
17. Foot lever bolt and nut (1974 and earlier)
18. Foot lever (1974 and earlier)
19. Lever torsion spring (1974 and earlier)
20. Frame brake shaft tube bushing (2) (1974 and earlier)
21. Cross shaft adjusting screw and nut (1974 and earlier)

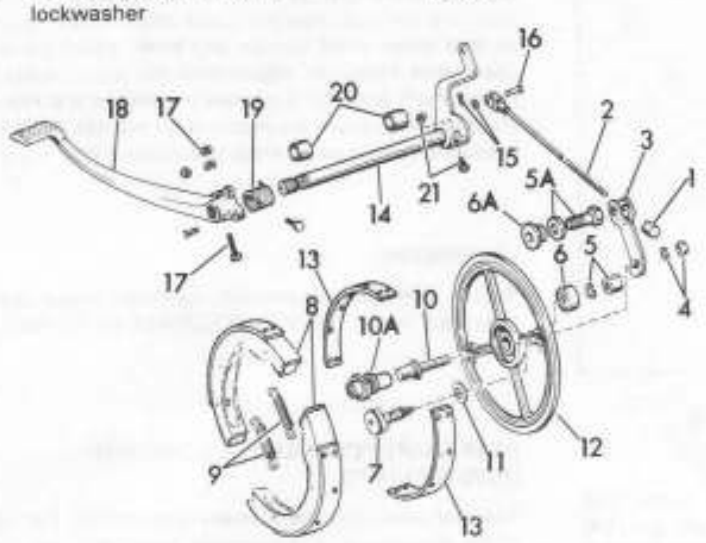

Figure 2-56. Rear Brake - Exploded View

Clean all dirt from brake drums (not shown), and examine for scoring, grooving, or excessive wear. Inspect brake operating shaft (4 and 7), pivot stud (6 and 10 or 10A), and brake side plate (7 and 12) for excessive wear of shaft bearing surfaces. Recommended repair procedure is replacement of badly worn or damaged parts.

ASSEMBLING FRONT BRAKE (1972 AND EARLIER) (Figure 2-55)

Assembly is essentially the reverse order of disassembly. Assemble brake shoes (8) on operating shaft (4) and pivot stud (6) with one spring (9). Secure spring in groove that is nearest brake side plate. Position washer (5). Assemble unit to brake side plate (7). Make sure flat side of pivot stud (6) registers in recess of brake side plate. Install operating lever (3) and nut (2). Attach second spring in place with pliers. Install front wheel and brake assembly as described in "REMOVING AND INSTALLING FRONT WHEEL," Section 2. Adjust brakes and center brake shoes as described in "ADJUSTING FRONT WHEEL BRAKE."

ASSEMBLING REAR BRAKE (Figure 2-56)

Assembly is essentially the reverse order of disassembly. Assemble brake shoes (8) on operating shaft (7) and pivot stud (10 or 10A) with one spring (9). Secure spring in groove nearest brake side plate. Position washer (11) on shaft (7). Assemble unit on brake side plate (12). Install locating block (6) on spacer (6A), nut and lockwasher (5) or anchor bolt and washer (5A), operating lever (3) and nut and lockwasher (4). Attach second spring in place with pliers. Position brake assembly in rear wheel brake drum and install wheel assembly in frame as described in "REMOVING AND INSTALLING REAR WHEEL." Insert brake rod (2) through lever (3). Assemble adjusting nut (1) loosely on rod (2). Adjust brakes and center brake shoes as described in "ADJUSTING REAR WHEEL BRAKE."

DISASSEMBLING AND ASSEMBLING REAR BRAKE CROSS SHAFT (1974 & EARLIER) (Figure 2-56)

If it is necessary to remove the brake cross shaft (14) from the motorcycle, proceed as follows:

Disconnect rear chain and remove exhaust pipe and muffler from motorcycle. Free brake rod (2) clevis from cross shaft (14) lever arm, by removing washer and cotter pin (15) and clevis pin (16). Discard pin (15). Loosen pinch bolt (17), slip foot lever (18) and spring (19) from shaft (14). Remove shaft (14) from frame tube.

Examine cross shaft (14) and lever (18) splines for wear and damage. If lever slips on shaft splines when pinch bolt (17) is tight, renew worn parts. Fit clevis pin (16) in rod (2) clevis, and check for worn condition. Replace clevis pin (16) if badly worn.

Check cross shaft (14) bearing surface and compare with shaft non-bearing surface. If bearing surface is not worn, but has excessive play in frame tube, replace bronze bushings (20). Thread tap (3/4-16 thd) into bushing and, from opposite side, drift bushing and tap from frame tube. Press new bushings (20) in place and install cross shaft (14). Rotate shaft to make sure it is free in bushings. If high spots develop when bushings are installed, ream to size.

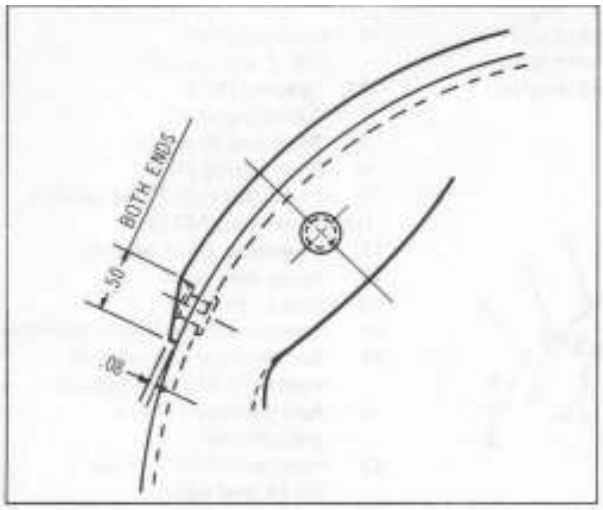

Figure 2-57. Beveling Brake Lining

With cross shaft (14) correctly positioned in frame tube, insert shaft arm in brake rod clevis and install pin (16). Insert washer and new cotter pin (15) in pin (16). Connect chain and install exhaust system.

See Figure 2-58, and proceed as follows: Adjust cross shaft adjusting screw (1) so that with screw against its stop on frame, the top of the cross shaft arm (2) is slightly back of center of the rear fork pivot bolt (3). Under no conditions should the top front of the cross shaft arm (2) be closer than 1-1/2 in. to the rear of the relieved portion of the transmission sprocket cover (4). Assemble brake pedal on cross shaft. If pedal does not position correctly (almost touching footrest), readjust cross shaft adjusting screw (1) so that cross shaft splines and brake pedal are correctly positioned. However, adjustment should be made so that cross shaft arm (2) is always moved to the rear, never closer to the transmission sprocket cover (4). After final adjustment tighten cross shaft bolt locknut (5).

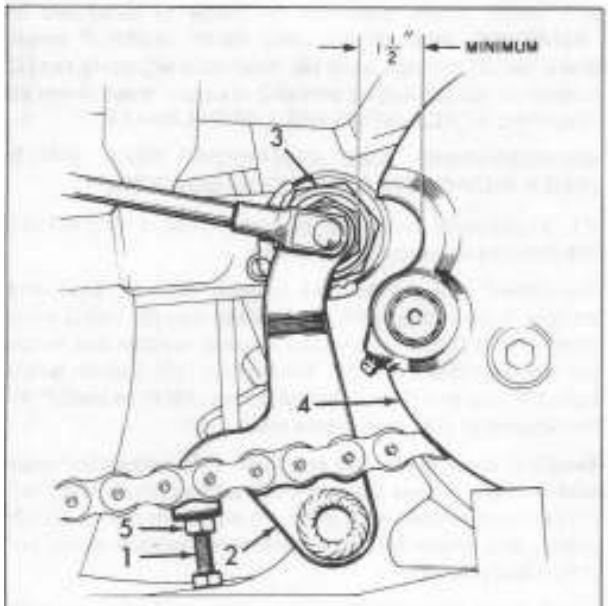

1. Adjusting Screw
2. Brake cross shaft arm
3. Rear fork pivot bolt
4. Transmission sprocket cover
5. Adjusting screw locknut

Figure 2-58. Rear Brake Cross Shaft Adjustment - 1974 and Earlier

LUBRICATING

Before operating motorcycle, lubricate brake system as indicated under "REGULAR SERVICE INTERVALS," Section 1.

REAR BRAKE FOOT PEDAL MECHANISM (1975 AND 1976)

The rear brake foot mechanism is located on the right side of the motorcycle. It is mounted, along with the right foot peg, on a bracket which attaches directly to the frame. To remove the bracket, remove the front muffler, remove the attaching pinch screw and pull off the bracket. Figure 2-59 shows the bracket removed, with foot peg and brake parts attached. Disassemble as follows:

Detach brake cable (1) at rear brake operating lever and remove from slot in clevis pin (5). Remove switch (3) from its mounting bracket by removing attaching hardware. Detach spring (4) at both ends and pull out clevis pin (5). Remove foot pedal (6) by removing screw (7). Remove foot peg (8) by removing attaching hardware.

Clean all parts and inspect for wear or damage. Assemble in reverse order of disassembly. When fully assembled, adjust adjusting screw (10) to remove excessive play between brake cable and foot pedal. Tighten locking nut on screw after adjustments are completed. Inject a small amount of grease in fitting (11) using a hand grease gun.

REAR BRAKE FOOT PEDAL (1977 AND LATER)

The rear brake foot pedal and associated parts are located on the right side of the motorcycle.

Adjustment

The position of brake pedal can be changed to suit rider as follows. Refer to Figure 2-60.

Turn stop screw (5) in or out of bracket (1) to set 1/4 in. dimension shown in figure. Place brake pedal in position on splines of shaft (2) as desired. Note that the 1/4 in. dimension is easily set by backing screw (5) all the way down into bracket (1) then turning it back out six turns.

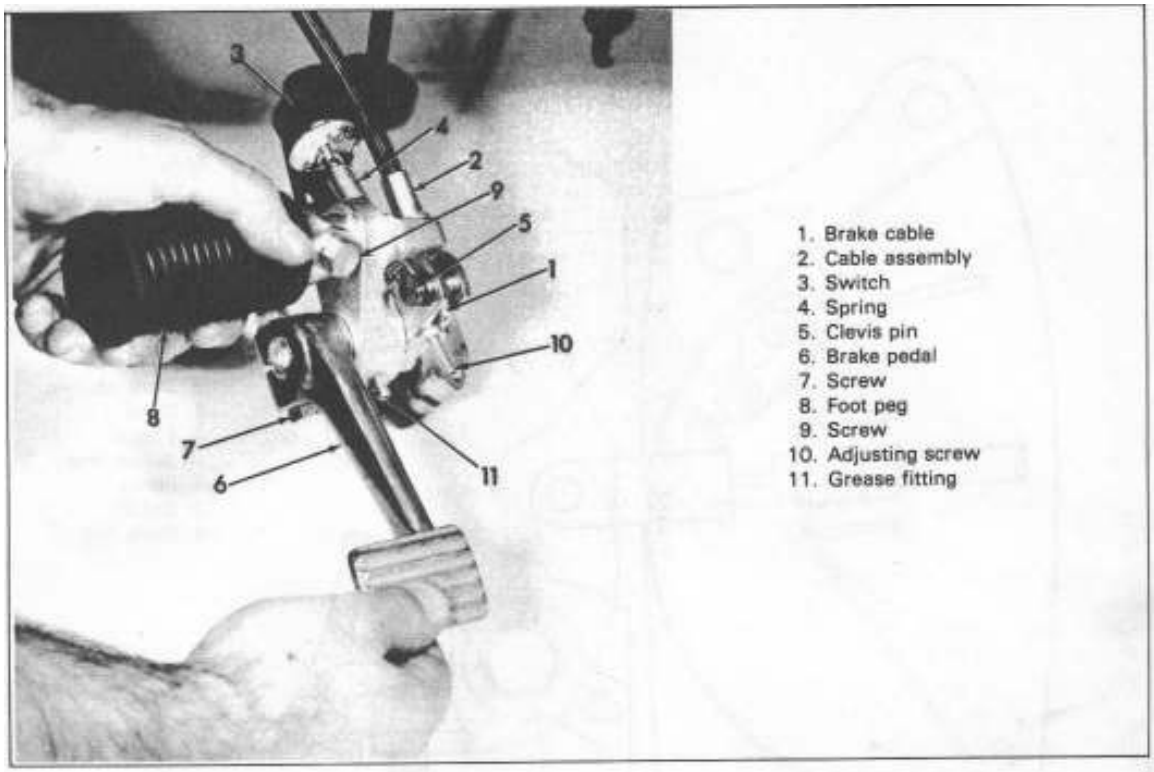

Figure 2-59. Rear Brake Foot Mechanism (1975 and 1976)

Make minor changes by readjusting stop screw (5). However, do not turn it more than three turns in either direction. A dimension close to 1/4 in. must be maintained for brake to work properly. Three turns of screw is about the same as changing pedal position one spline. So, if pedal is still not as desired, try repositioning on shaft splines rather than turning screw more than three turns.

After a new brake pedal position has been chosen, the position of stop light switch must be checked and repositioned as required. Loosen hardware securing switch and position along slot shown so switch plunger does not bottom out when pedal is fully released. Retighten switch mounting hardware.

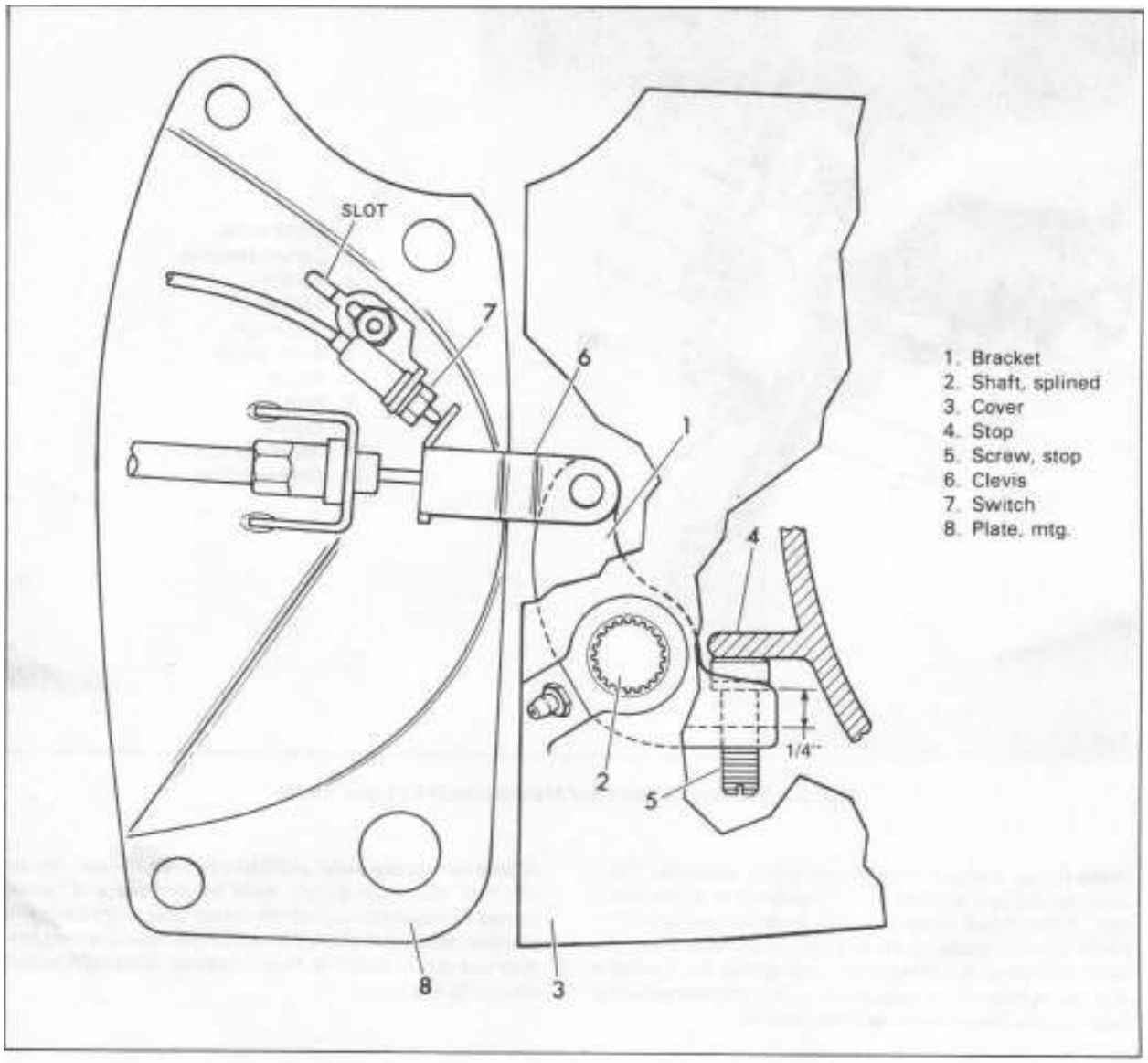

Figure 2-60. Rear Brake Foot Pedal (1977 and Later)

FRONT DISC BRAKE (1973 AND LATER)

OPERATION

NOTE

Two types of disc brakes are used. The following description applies to Figure 2-61 brake. Figure 2-62 brake operates in a similar manner.

The front brake master cylinder is an integral part of the brake hand lever assembly on the right handlebar. A hydraulic hose connects the master cylinder to the brake cylinder located in the outer caliper half on the left front fork slider. Brake pads in the caliper halves apply pressure to each side of disc mounted on the front wheel hub.

When the brake hand lever is operated, the hydraulic fluid forces the piston against the brake pads which contact the disc. The wave spring is compressed between the backing plate and the adjusting ring. The adjusting ring is a press-fit in the cylinder and moves, as necessary, to take up excess clearance as friction material wears away. The press-fit adjusting ring takes up a new position in the cylinder and is now located correctly to maintain running clearance when brake is released, and makes brake self-adjusting. The action of the wave spring pulls the brake piston away from the disc to create a small pad-to-disc running clearance.

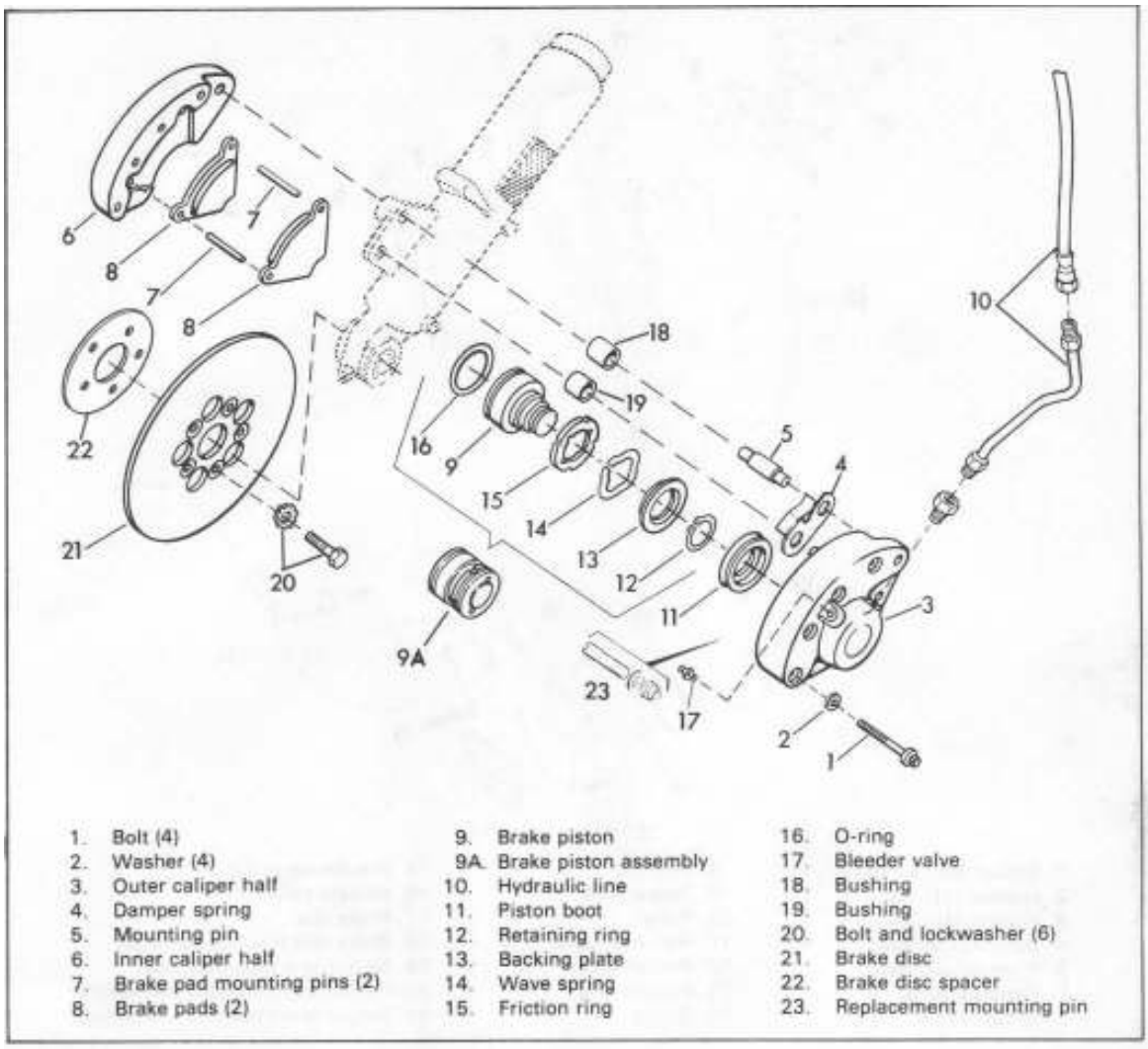

Figure 2-61. Front Disc Brake (1973) - Exploded View

CHECK LIST

When the brake is not operating properly use the following list for possible causes.

1. Excessive lever travel or spongy feel.
   Air in system - bleed brake.
   Master cylinder low on fluid - fill master cylinder with approved brake fluid.
2. Chattering sound when brake is applied.
   Worn or defective pads - replace brake pads.
   Loose mounting bolts - tighten bolts.
   Warped disc - replace disc.
3. Ineffective brake - lever travels to the limit.
   Low fluid level - fill master cylinder with approved brake fluid.
   Piston seal defective - replace O-ring in brake piston.
4. Ineffective brake - lever travel normal.
   Distorted disc - replace brake disc.
   Distorted or contaminated brake pads - replace brake pads.
5. Brake pads drag on disc - will not retract.
   Adjusting ring not tight enough in caliper bore - replace adjusting ring.
   Piston binding in adjusting ring - replace.
   Piston in master cylinder not uncovering relief port - check master cylinder.

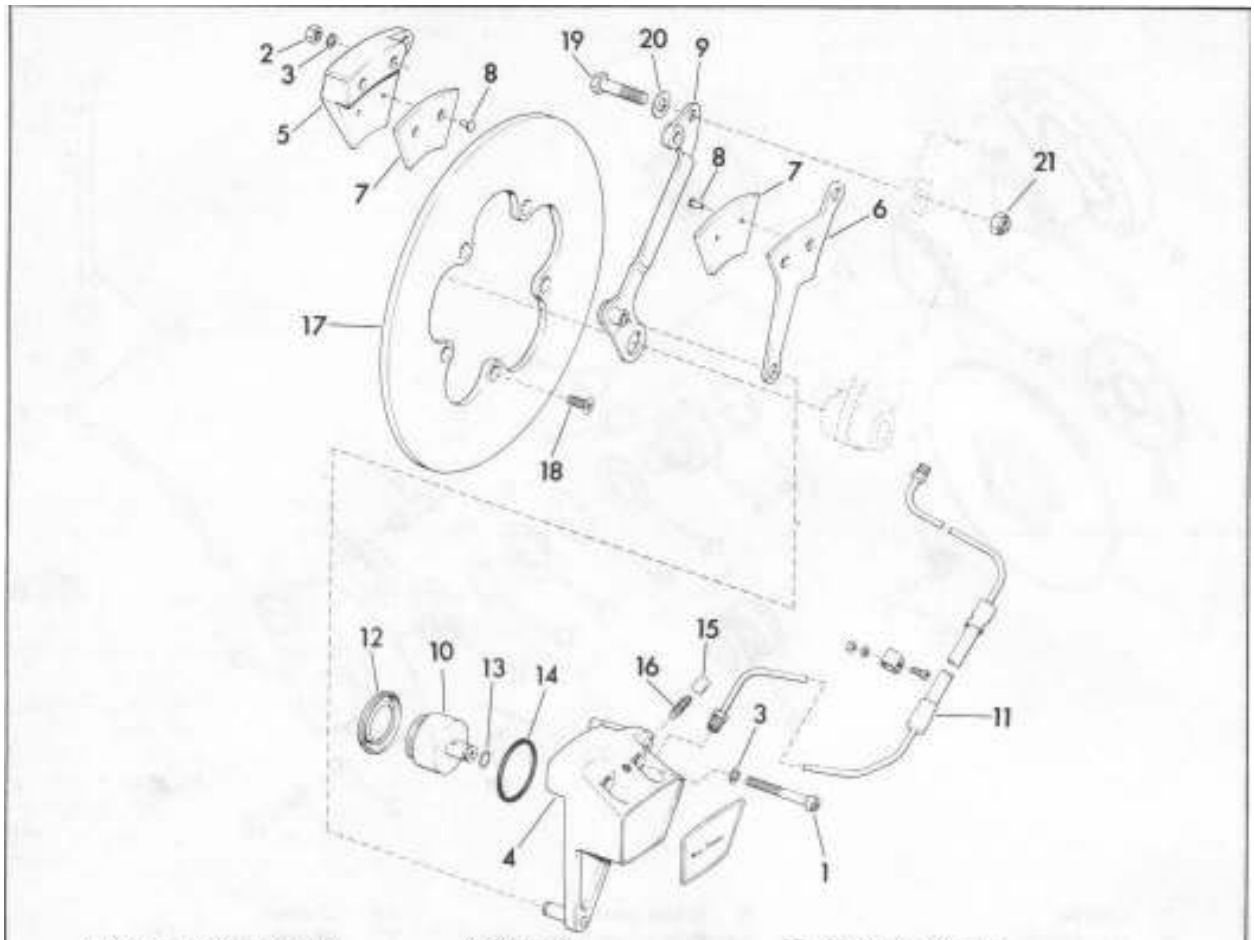

1. Socket head screw (2)
2. Locknut (2)
3. Washer (4)
4. Outer caliper half
5. Inner caliper half
6. Pressure plate
7. Brake pad (2)
8. Rivet (4)
9. Torque arm
10. Piston
11. Hydraulic hose
12. Rubber boot
13. Friction ring
14. O-ring
15. Bleeder valve cap
16. Bleeder valve
17. Brake disc
18. Brake disc mountig screw (5)
19. Torque arm mounting bolt
20. Torque arm mounting bolt washer
21. Torque arm mounting bolt locknut

Figure 2-62. Front Disc Brake (1974 to 1977)

DISASSEMBLING AND ASSEMBLING DISC BRAKE CALIPER – 1973 (Figure 2-61)

If only the caliper assembly is to be removed, it is not necessary to remove the wheel. To remove the caliper assembly proceed as follows: Remove hose clamp. Remove 4 bolts (1) and washers (2). Remove outer caliper half (3) and damper spring (4). Remove mounting pin (5) and inner caliper half (6). Remove brake pad mounting pins (7) and brake pads (8). Check the friction pads for wear, damage, and looseness. Remove both pads if thickness of friction material is less than 1/16 in. Check to see that the metal backing plate is flat. If it is at all bowed replace the brake pad.

NOTE

Brake pads should only be replaced as a set.

With hydraulic system connected to outer caliper half assembly (3), use a dial indicator to check piston retraction. Mount dial indicator on back of outer caliper with indicator plunger on the piston face. Apply hand brake. Set dial indicator to zero. Release hand brake. Piston should retract .020 to .025 in. If it does not, replace piston assembly (9A). Do not remove piston assembly unless there are signs of hydraulic fluid leakage or if piston is not operating properly.

To remove piston (9 or 9A), pump brake hand lever until piston will move no farther. Remove hydraulic line (10). Push piston boot (11) back from groove in piston and pull piston the rest of the way out.

Remove the retaining ring (12) using External Retaining Ring Pliers, Harley-Davidson, Part No. 95017-61. Backing plate (13), wave spring (14), adjusting ring (15), and O-ring (16) may now be removed. Remove bleeder valve (17). Clean all parts in solvent and inspect. Replace any parts that are worn, or damaged. Inspect cylinder bore. If it is badly scored, replace outer caliper half (4). When reassembling use new O-ring (16) and adjusting ring (15).

Clean and inspect bushings (18 and 19). Install new bushings if worn or damaged.

Riveted type mounting pin can be replaced by bolt type (23) if loose or damaged.

At this time check brake disc for wear and damage. If disc is warped more than 1/32 in. or thickness is worn to .188 in. (3/16 in.) or less, replace it. See "FRONT WHEEL HUB."

Reassembly is basically the reverse of disassembly. Make sure all parts are clean and in good condition before assembly. Dip the piston assembly (items 9 or 9A, 12, 13, 14, 15 and 16) and piston boot (11) in hydraulic fluid.

Assemble piston boot to caliper bore. Piston bore has a small hole in it to allow drainage of accumulated moisture. Assemble boot with hole positioned downward when caliper is assembled to motorcycle. Press piston assembly into caliper bore keeping it square to avoid scoring the bore. Push it firmly all the way in.

NOTE

Piston assembly must be pressed all the way into the bore when new brake pads have been installed to assure proper clearance when calipers are reassembled to motorcycle.

Install bleeder valve (17). Apply Harley-Davidson "Anti-Seize," Part No. 99632-77 to 4 bolts (1) before assembly. Assemble caliper unit to motorcycle. Tighten 4 bolts (1) to 35 ft-lbs torque. Connect hydraulic line (10). Assemble hose clamp. Fill master cylinder reservoir with hydraulic brake fluid. Use only hydraulic brake fluid which is approved for use in hydraulic brake systems. On front brake master cylinder fill to gasket surface.

CAUTION — When filling brake system or assembling parts be careful not to spill brake fluid on brake switches. Fluid will cause corrosion and possible switch failure.

NOTE

Turn handlebar to the left so that top of reservoir is level. Check for leaks. If leaks persist at hydraulic fittings, coat surfaces with Harley-Davidson "Pipe Sealant with Teflon," Part No. 99630-77. Use only Harley-Davidson "Pipe Sealant with Teflon" to avoid contamination of hydraulic system. Bleed brake to purge system of air. See "BLEEDING HYDRAULIC SYSTEM."

If after a short period of operation brake feels spongy, repeat bleeding procedure.

Install wheel on motorcycle as described under "REMOVING AND INSTALLING FRONT WHEEL."

DISASSEMBLING AND ASSEMBLING DISC BRAKE CALIPER (1974 TO 1977) (Figure 2-62)

If only the caliper assembly is to be removed, it is not necessary to remove the wheel. To remove caliper assembly, proceed as follows: remove socket head screw (1), locknuts (2), and washers (3). Pull outer caliper half (4) and inner caliper half (5) apart. Remove pressure plate (6) with brake pad (7) attached. Check brake pads for wear, damage and looseness.

Replace pads if worn down to indicator groove on bottom of pad. If pads need replacing, drill out rivets (8) with a 9/64 in. drill. Replace pads as a set only. Check to see that pressure plate (6) is flat. If it is at all bowed, replace it. Rivet new pads in place using a hollow rivet set. Before reassembling caliper halves push piston all the way into caliper bore. Also make sure that bushings in torque arm (9) are free of dirt and corrosion.

Do not remove piston from outer caliper half unless there are signs of hydraulic fluid leakage, or if piston is not operating properly.

To remove piston (10) disconnect and plug hydraulic hose (11). Pull off rubber boot (12). Using two screwdrivers, carefully pry piston (10) from caliper bore. If friction ring (13) is damaged remove it from piston and replace it. Remove O-ring (14) from caliper bore. Remove bleeder valve cap (15) and bleeder valve (16). Clean all parts in solvent and inspect. Replace all parts that are worn or damaged. Inspect cylinder bore. If it is badly scored, replace outer caliper half. At this time check brake disc (17) for wear and damage. Replace brake disc if it is worn to .188 in. or less or if it is badly scored or warped. See "FRONT WHEEL HUB."

Reassembly is basically the reverse of disassembly with the following exceptions. Make sure all parts are clean and in good condition. Lubricate piston, friction ring, and O-ring with brake fluid. When assembling piston and friction ring assembly to caliper half and O-ring assembly, make sure piston is square with the bore. Tap it in place with a soft hammer while rotating it so that O-ring is not damaged. When assembling boot make sure both lips engage their respective grooves.

Make sure bosses on torque arm are clean and free from corrosion before mounting caliper. When mounting caliper halves, tighten socket head bolts to 130 in-lbs torque. Make sure caliper floats freely on torque arm.

Connect hydraulic line (11) to caliper. Fill front brake master cylinder with approved hydraulic fluid. Check system for leaks and seal with Harley-Davidson "Pipe Sealant with Teflon," Part No. 99630-77, if necessary. Bleed brake to purge system of air. See "BLEEDING HYDRAULIC SYSTEM."

DISASSEMBLING AND ASSEMBLING DISC BRAKE CALIPER – 1978 (Figure 2-63)

If the brake disc must be replaced, it will be necessary to remove the wheel. See "WHEEL" section. To remove and disassemble one caliper assembly, use the following procedure.

Loosen bolt (11) but do not remove.

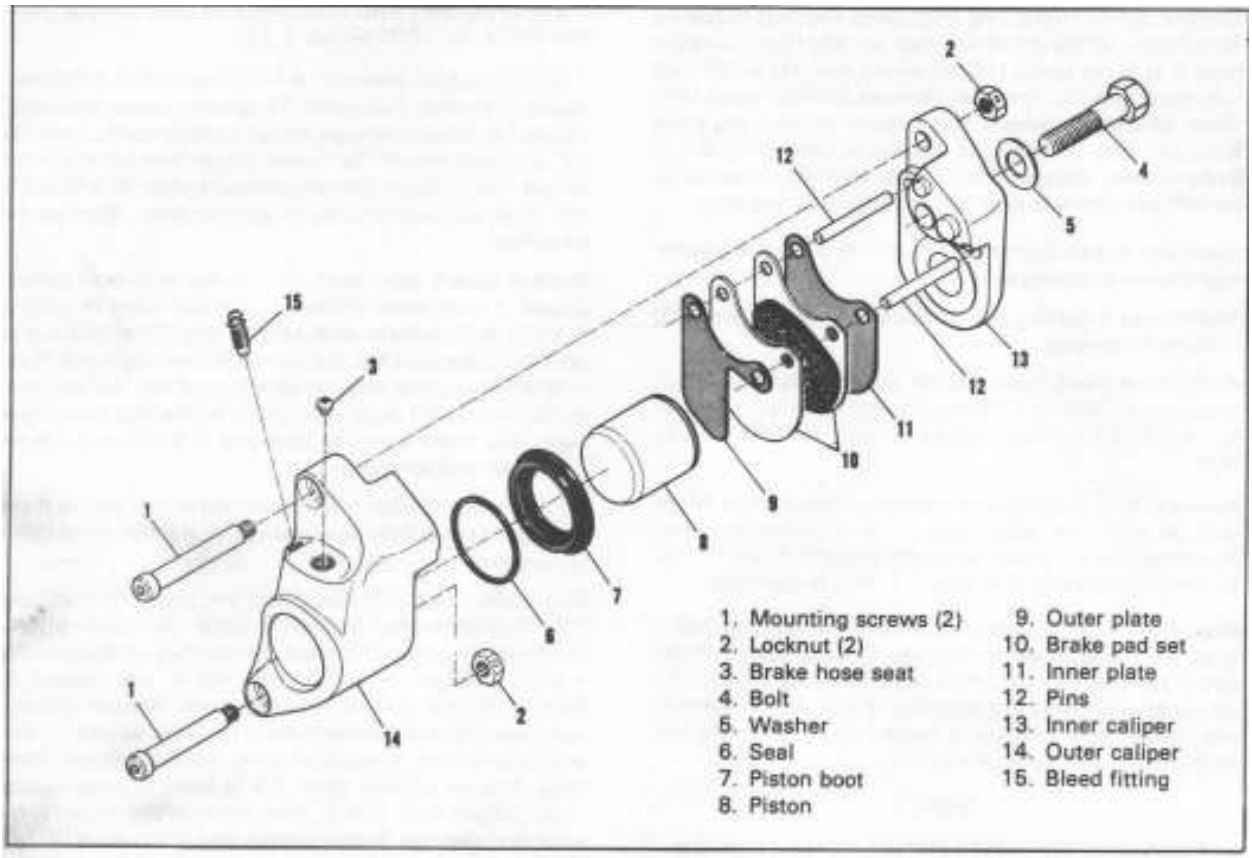

Figure 2-63. Front Brake Caliper (Left) (1978)

Remove the two mounting screws (1) and nuts (2) to release caliper assembly from front fork. Turn handlebar until top of master cylinder is nearly level. Remove cover and gasket. Disconnect hydraulic fitting at brake caliper and hose line. Be careful brake hose seat (3) is not lost.

Remove bolt (4) and washer (5) to disassemble caliper halves. Remove seal (6), piston boot (7) and piston (8). Remove outer plate (9), brake pad set (10) and inner plate (11) from pins (12) and remove pins from inner caliper (13).

INSPECTION AND CLEANING

If brake pads are worn to 1/16 in. or less, replace set (10). Clean all metal parts in a non-flammable cleaning solvent. Blow dry with compressed air. Rubber parts must be cleaned in denatured alcohol or brake fluid.

WARNING — Use a non-flammable cleaning solvent for cleaning component parts. DO NOT use gasoline or other flammable substances.

CAUTION — Always clean brake system rubber parts by washing in denatured alcohol or brake fluid. DO NOT use mineral base cleaning solvents such as gasoline or paint thinner. Use of mineral base solvents will cause deterioration of the part and would continue to deteriorate after assembly which could result in component failure.

Inspect all components carefully for excessive wear or damage. Discard old seal (6) and replace with a new one.

Inspect brake discs bolted to wheel assembly and replace if warped or badly scored. See "WHEELS" for disassembly procedure.

WARNING — The front brake and the rear brake pads must be replaced in pairs only for correct and safe brake operation.

Place the two pins (12) in the inner caliper (13). Slide the inner plate (11), brake pad set (10) and outer plate (19) onto the pins.

Dip the seal (6), piston boot (7) and piston (8) into brake fluid before assembly. Use silicone base D.O.T. 5 type fluid. Place the seal, boot and piston into the outer caliper (14).

NOTE

Piston assembly must be pressed all the way into the bore when new brake pads have been installed to assure proper clearance when calipers are reassembled to motorcycle.

Position the outer caliper on the pins (12) and secure to inner caliper assembly with washer (5) and bolt (4). Tighten to 45 to 50 ft-lbs torque.

Install bleed fitting (15), if removed, and brake hose seat (3) into outer caliper. Connect brake hose to caliper. Install front wheel, if removed. See "WHEELS."

Mount the caliper assembly to the front fork with two mounting screws (1) and locknuts (2). Torque screws to 115 to 120 in-lbs. Tighten bolt (4, Figure 2-63) to 45 to 50 ft-lbs torque.

NOTE

New locknuts should be used as this type of nut tends to lose its holding power when reused. If new locknuts are not available, Harley Davidson Lock and Seal, Part No. 99625-77, should be used on threads.

Turn handlebar until top of master cylinder is nearly level. Slowly fill reservoir with D.O.T. 5 type hydraulic brake fluid, to gasket level. Reservoir may be filled with pressurized equipment, see "BLEEDING HYDRAULIC SYSTEM."

NOTE

Check for leaks. If leaks persist at hydraulic fittings, coat surfaces with Harley-Davidson "Pipe Sealant with Teflon," Part No. 99630-77. Use only this sealant to avoid contamination of hydraulic system. Bleed brake to purge system of air.

FRONT BRAKE MASTER CYLINDER

DISASSEMBLING AND ASSEMBLING FRONT DISC BRAKE MASTER CYLINDER (Figure 2-64)

The master cylinder (1) is located on the right handlebar. Disassemble as follows: Remove master cylinder cover (2) and gasket (3) by removing 2 screws (4). Disconnect hydraulic line (5) from master cylinder. Remove handlebar switch assembly and disconnect stoplamp wires. Remove retaining ring (6) and pivot pin (7). Pull out brake lever (8), pin (9), plunger (10), spring (11), 2 washers (12), and dust wiper (13). Remove retaining ring (14) with Retaining Ring Pliers, Harley-Davidson Part No. 96215-49. Pull out piston (15) and O-ring (16) assembly, piston cup (17), spring cup (18), and piston return spring (19).

Inspect piston cup (17), and O-ring (16) for wear, softening, or enlarging. Examine cylinder walls for scratches and grooves. Gasket (3) should have no tears, punctures or breaks which would allow leakage. Replace if necessary.

Make sure vent hole in master cylinder cover is open.

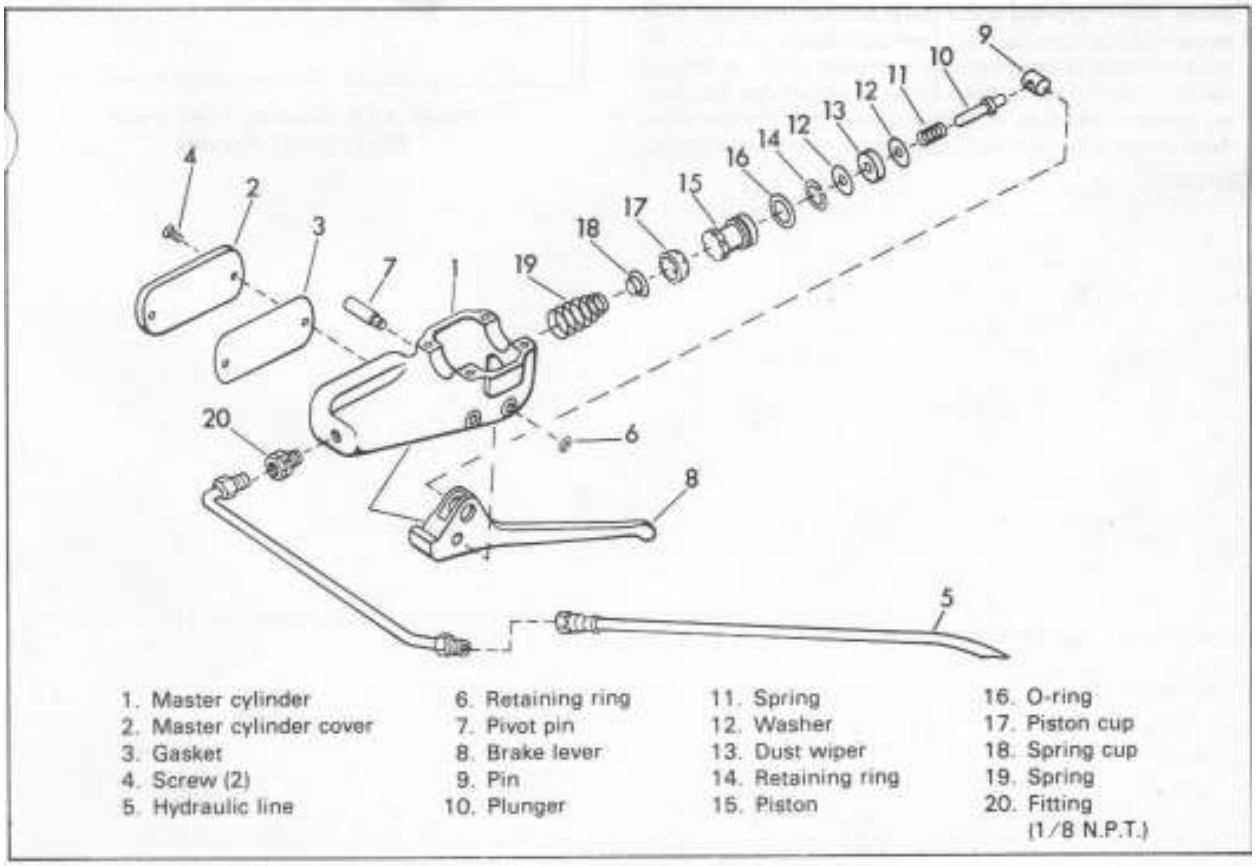

Figure 2-64. Front Disc Brake Master Cylinder (1973 and Later) - Exploded View

Assemble master cylinder in reverse order of disassembly. If repair kit is installed, use all new parts, not just those that look worn. Dip all internal parts in brake fluid before assembly. Lightly grease pivot pin (7) and pin (9) before assembly. Turn handlebars to the left and fill system with D.O.T. 5 grade hydraulic brake fluid and bleed brake system. When filling brake system or assembling parts be careful not to spill brake fluid on brake switches. Fluid will cause corrosion and possible switch failure. See "BLEEDING HYDRAULIC SYSTEM." Install gasket (3) with flat side down. Install cover (2).

NOTE

Before adding hydraulic fluid, check to see that relief port in master cylinder is uncovered when brake lever is released.

Bleed system carefully to purge all air. Test ride motorcycle. If brake feels spongy, repeat bleeding procedure.

BLEEDING HYDRAULIC SYSTEM (Figure 2-65)

After servicing hydraulic brake system where any hydraulic line or cylinder is opened, it is necessary to bleed the system to expel all air.

Slip a length of appropriate size plastic tubing over wheel cylinder bleeder valve with other end in a clean container.

Turn handlebars to the right so that bleeder valve is nearly vertical. Open bleeder valve by rotating counterclockwise about one-half turn. With master cylinder full of fluid at all times, slowly depress brake pedal or lever once until fluid stops flowing from tubing. Close the bleeder valve. Allow pedal or lever to return slowly to release position. Repeat operation until brake system is free of air bubbles. Add fluid to master cylinder to bring to original level. Do not reuse fluid unless it is clear and free from sediment and bubbles.

NOTE

Hydraulic brake fluid pressure equipment can be used to fill front brake master cylinder at the bleeder fitting, providing master cylinder cover is removed so that system cannot pressurize. Do not use pressure bleeding equipment when the front hydraulic system is sealed with master cylinder cover and gasket in place.

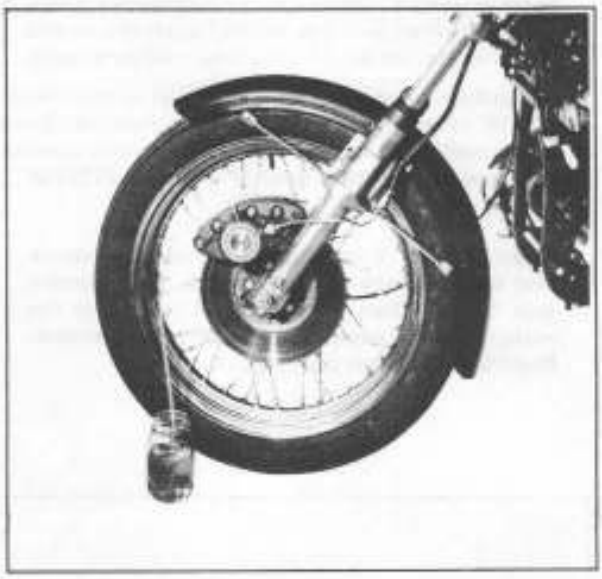

Figure 2-65. Bleeding Front Brake (1973 Model Shown)

BODY CARE

GENERAL

Parts are made of molded fiberglass. There are 3 types of fiberglass material finishes:

1. Gel Coat finish: This finish is made of a special pigment and blended polyester resin several thousandths of an inch thick.

2. Molded-in-Color finish: This finish is molded into the fiberglass material which is the same color throughout its thickness.

3. Painted finish: This finish is painted on the natural color fiberglass material using standard painting procedure.

CARE OF FINISHES

The Gel Coat and molded-in-color finishes require minimum care and can be kept new looking by following these easy maintenance rules:

Clean, buff and wax the exterior periodically to renew finish.

An automotive wax type cleaner containing fine rubbing compound is suitable for removing minor scratches and scuffs. Scratches which are not removed by the rubbing compound can be removed by wet sanding with 400 grit sandpaper. Then wet sand with 600 grit sandpaper, rebuff and apply wax polish.

Care should be taken not to cut through the gel coat surface when buffing. A power buffer may be used with care or the surface may be buffed by hand, using a rubbing compound.

REPAIR

GENERAL

Patch and fill in deep scratches, scars and small breaks.

Repair any major breaks as soon as possible, to avoid any additional damage.

For damage to the gel coat finish, a can of *Gel Coat* of the same color and a small amount of catalyst is needed. For damage to the molded-in-color surface, a can of *Filler Coat* of the same color and a small amount of catalyst is needed. For deeper holes, breaks, or gouges, some fiberglass mat and pre-accelerated polyester resin will also be required. Gel Coat and Filler Coat with catalyst are available in kit form from the Harley-Davidson Motor Co. The other materials including fiberglass mat, and pre-accelerated polyester resin are supplied in fiberglass repair kits which are available at most marine or automotive supply stores.

Damage to the painted type finish can be repaired by sanding, priming and painting using regular painting procedure.

SURFACE FINISHING

This type of damage may be classified as damage to the gel coat only, or a hole or gouge that is deep enough to slightly penetrate fiberglass material. Repair as follows:

1. To be sure that the area to be patched is dry, clean and free of any wax or oil, wash with lacquer thinner.

2. Roughen the bottom and sides of the damaged area, using a power drill with a burr attachment. Feather the edge surrounding the scratch or gouge, being careful not to undercut this edge. See Figure 2-66.

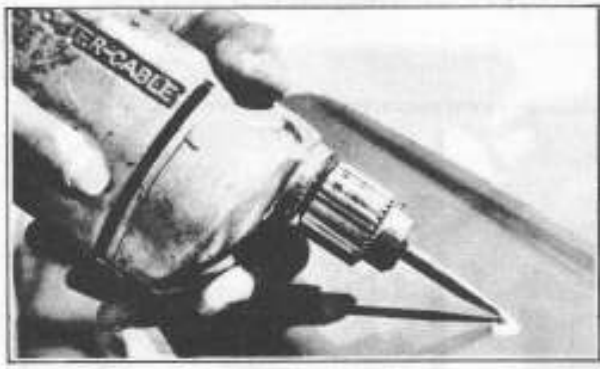

Figure 2-66. Roughing Damaged Area

3. A small amount of gel coat, the same color as the finish should be placed in a small can lid or on a piece of cardboard. Use just enough to fill the damaged area. If damage has penetrated through to fiberglass material, an equal amount of fibers, which can be taken from glass mat and shredded into small fibers, should be mixed with the gel coat – using a putty knife or flat stick. Add three drops of catalyst per teaspoon of gel coat using an eye dropper. Be sure to mix the catalyst thoroughly for maximum working time. Maximum working time (pot life) will be about 15 to 20 minutes at which time it begins to "gel." See Figure 2-67.

4. Fill the scratch or hole above the surrounding undamaged area about 1/16 in., working the material into the damaged area with the sharp point of a knife. Be careful to puncture and eliminate any air bubbles which may occur. See Figure 2-68.

NOTE

If fiberglass fibers have not been used in mixture, skip steps 5 through 7 and proceed with step 8.

5. When the patch feels rubbery to touch (10-15 minutes), trim the patch flush with the surface, and then allow to cure completely (30-60 minutes). Patch will shrink slightly as it cures, making a depression. See Figure 2-69.

6. Carefully roughen up the bottom and edges of the depression, using the electric drill with burr attachment, as in Step 2. Feather into surrounding gel coat: do not undercut.

Figure 2-67. Mixing Gel Coat Glass Fibers

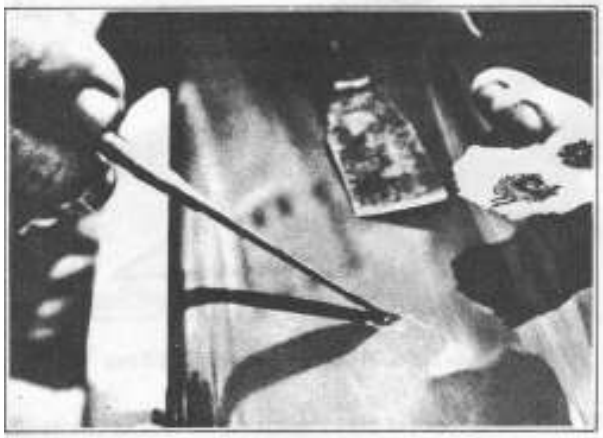

Figure 2-68. Filling Hole or Scratch

Figure 2-69. Trimming Patch

7. Again mix a small amount of gel coat with catalyst - do not use glass fibers. Using your finger or putty knife, fill the depression with gel coat 1/16 in. above the surrounding surface.

8. Spread the gel coat level with the surrounding area and allow to cure (30-60 minutes). See Figure 2-70. Gel coat can be covered with cellophane, if desired, to aid in spreading evenly. Remove cellophane after gel coat has cured.

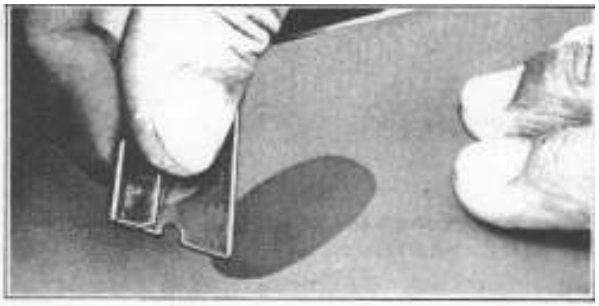

Figure 2-70. Spreading Gel Coat Evenly

Figure 2-71. Sanding Patch

9. Sand the patched area, using a sanding block with 600-grit wet sandpaper. Finish by buffing with fine rubbing compound such as DuPont #606 and waxing. Weathering will aid to blend touch-up if a slight color difference can be observed. See Figure 2-71.

NOTE

Where surface color of part has changed due to weathering, color match of patch may not be satisfactory. In this case, entire panel must be sprayed.

Thin Gel coat with acetone (1 to 1 ratio) and spray panel, blending sprayed area into a radius or corner on the part. Use a touch-up spray gun such as the Binks Model 15. After Gel coat is hard, buff and polish sprayed area.

MOLDED-IN-COLOR SURFACE REPAIRS

This type of damage consists of a scratch, hole or gouge that is deep enough to slightly penetrate fiberglass material.

Repair as follows:

1. To be sure that the area to be patched is dry, clean and free of any wax or oil, wash with lacquer thinner.

2. Roughen the bottom and sides of the damaged area, using a power drill with a burr attachment. Feather the edge surrounding the scratch or gouge, being careful not to undercut this edge. See Figure 2-66.

3. A small amount of Filler coat, the same color as the finish should be placed in a small can lid or on a piece of cardboard. Use just enough to fill the damaged area. Add three drops of catalyst per teaspoon of Filler coat using an eye dropper. Be sure to mix the catalyst thoroughly for maximum working time. Maximum working time (pot life) will be about 15 to 20 minutes at which time it begins to "gel."

4. Fill the scratch or hole slightly above the surrounding undamaged area, working the Filler coat into the damaged area with a putty knife. Be careful to puncture and eliminate any air bubbles which may occur. Patch can be covered with cellophane to aid in spreading evenly (see Figure 2-70). Allow to cure completely before removing cellophane.

5. Sand smooth with 220-grit sandpaper; then use 600-grit for finish sanding. Blend into surrounding area using 600-grit sandpaper. Buff with polishing compound such as DuPont #600 and finish with paste wax.

NOTE

Where surface color of part has changed due to weathering, color match of patch may not be satisfactory. In this case, entire panel must be sprayed.

Thin Gel Coat with acetone (1 to 1 ratio) and spray panel, blending sprayed area into a radius or corner on the part. Use a touch-up spray gun such as the Binks Model 15. After Gel Coat is hard, buff and polish sprayed area.

PATCHING OF HOLES, PUNCTURES AND BREAKS

If possible, work in shaded spot or in a building where the temperature is between 70° and 80°F.

1. Be sure surface is clean and dry where repair is to be made. Remove all wax and dirt from the damaged area.

2. Prepare injured area by cutting back fractured material to the sound part of the material. A keyhole or electric saber saw can be used to cut out the ragged edges. See Figure 2-72.

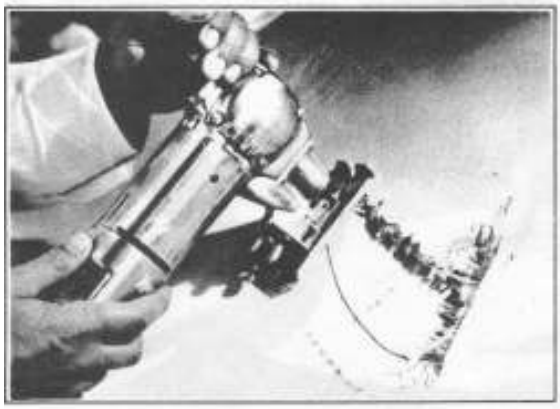

Figure 2-72. Sawing Out Damaged Area

3. Rough sand the inside surface, using 80-grit dry sandpaper, feathering back about two inches all around the hole in the area the patch will touch. See Figure 2-73.

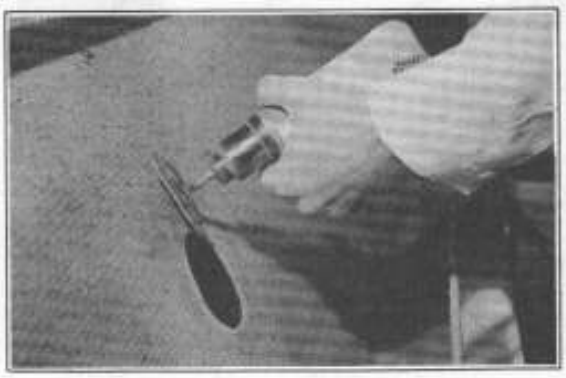

Figure 2-73. Rough Sanding Inside Surface

4. Cover a piece of cardboard or aluminum with cellophane and tape it to the outside surface with the cellophane facing toward the hole. Aluminum is used as backing where contour is present. The aluminum should be shaped the same as the contour. See Figure 2-74.

5. Cut glass mat to shape of hole, about 2 in. larger than hole.

Figure 2-74. Taping on Backing

6. Mix small amount of pre-accelerated resin and catalyst and daub resin on mat, thoroughly wetting it out. This may be done on a piece of cellophane or wax paper. See Figure 2-75.

NOTE

Mix resin 100 parts to 1 part catalyst for an approximate 30 minutes working time. Only mix enough resin for a given patch.

7. Lay patch over hole, cover with cellophane and squeegee out air bubbles. Allow one to two hours to cure, then remove cellophane. See Figure 2-76.

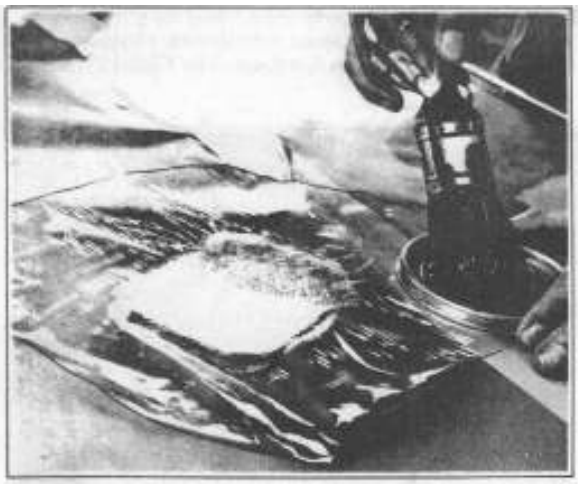

Figure 2-75. Applying Resin to Mat

Figure 2-76. Squeegeeing Patch

8. After the patch is cured, remove the cardboard from the outside of the hole and rough sand outside surface, feathering the edge of the hole. See Figure 2-77.

9. Mask area with tape and paper to protect the surrounding surface; they repeat steps 5, 6, 7 and 8, applying patches to outside surface until enough material has been laminated to re-establish the original thickness of the section.

10. Allow the patch to cure overnight; then sand with dry 80-grit paper on power sander. Smooth the patch and blend it with surrounding surface. If air pockets are present, puncture and fill with catalyzed resin. Let cure and resand. See Figure 2-78.

11. Mix gel coat or filler coat with catalyst. Work Gel Coat into patch with fingers. See Figure 2-79. Filler Coat should be filled into patch with a putty knife.

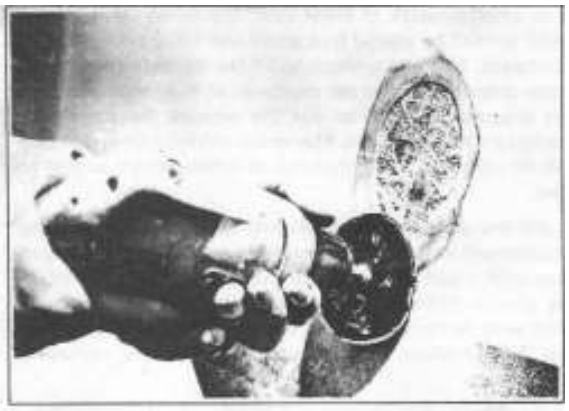

Figure 2-77. Rough Sanding Outside Surface

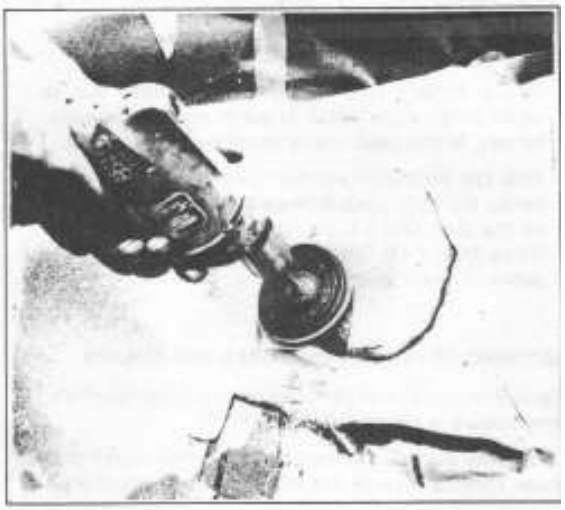

Figure 2-78. Bleeding Patch with Sander

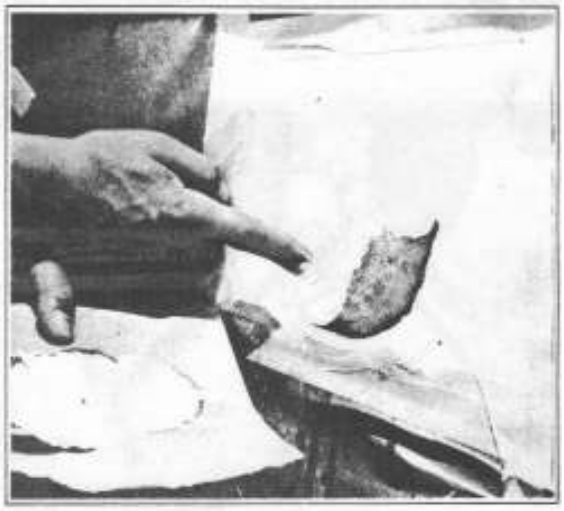

Figure 2-79. Working Gel Coat into Patch

12. Cover with cellophane and squeegee smooth. Allow to cure completely before removing cellophane.

13. Sand the patch with 220-grit wet sandpaper; then use 600-grit for finish sanding. On painted type surface, paint can be applied at this time. Buff with polishing compound and wax.

NOTE

On Gel Coat finish, it may be necessary to repeat Steps 12 and 13 to insure a smooth, even gel coat surface. See Figure 2-80.

For large areas the gel coat can also be sprayed.

Where surface color of part has changed due to weathering, color match of patch may not be satisfactory. In this case, entire panel must be sprayed.

Thin Gel Coat with acetone (1 to 1 ratio) and spray panel, blending sprayed area into a radius or corner on the part. Use a touch-up spray gun such as the Binks Model 15. After Gel Coat is hard, buff and polish sprayed area.

Figure 2-80 Buffing Finish

Heat lamps may be used if working conditions are cold.

CAUTION — Do not place lamp bulb closer than 14 inches to surface or the resin may blister.

TOOLS

Fits slotted type locknuts.

Part No. 94630-67 Wheel Hub Bearing Locknut Wrench

For small wheel spoke nipples (.205" across flats).

Part No. 94678-18 Spoke Nipple Wrench

For large wheel spoke nipples (.234" across flats).

Part No. 94681-39 Spoke Nipple Wrench

Used to remove fork piston rod bushing from fork damper tube.

Part No. 94691-52 Fork Piston Rod Bushing Spanner Wrench

Used to remove fork piston rod retainer from fork tube.

Part No. 94694-52 Fork Piston Rod Retainer Wrench

Used to adjust rear shock absorber units for more or less spring compression (1974 and earlier).

Part No. 94700-65 Rear Shock Spanner Wrench (1974 and Earlier)

Used to adjust rear shock absorber units for more or less spring compression (1975 and later)

Part No. 94820-75 Rear Shock Spanner Wrench (1975 and Later)

Used to install press-fit connecting link sideplate supplied with replacement chains.

Part No. 95020-66 Rear Chain Connecting Link Press Tool

Removes press fit roller pins from all chains.

Part No. 95021-29 Chain Diassembly Tool

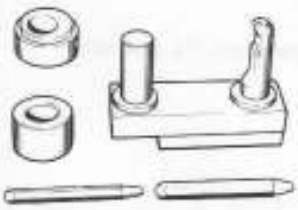

Used to rivet rear sprocket to brake shell. Set consists of riveting block, rivet punch, rivet set, adapter and support flange.

Part No. 95600-33B Sprocket Riveting Set

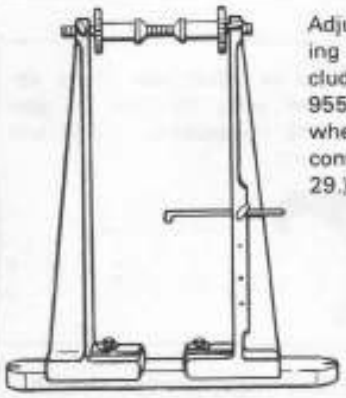

Adjustable stand for truing spoked wheels. Includes arbor.
95515-30A Arbor for wheels. (Can be used to convert old stand 95500-29.)

Part No. 95500-29A Wheel Truing Stand

When inserted into top end of fork tube, blade enters slot of damper tube to keep it from turning while removing or installing bottom nut on fork.

Part No. 95991-69 Fork Damper Holding Tool, 1968 to 1972

When inserted into top end of fork tube, socket fits over flats on damper tube to keep it from turning while removing or installing bottom screw on fork.

Part No. 94556-73 Fork Damper Holding Tool (1973-1974)

Special pliers for removing and replacing retaining rings.
96215-49 Small.
96216-49 Large.

Internal Lock Ring Pliers

Three recommended for use to support fork tubes while straightening on an arbor press.

Part No. 96247-54 Fork Tube Straightening Block (1972 & Earlier)

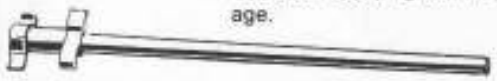

Used for straightening handlebar, forks and frames. Hooks on tubes for applying bending leverage.

Part No. 96806-40 Bending Bar

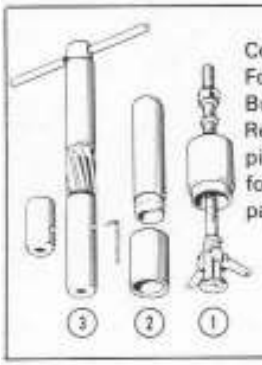

Complete set of tools consists of Fork Slider Bushing Puller (1), Bushing Driver (2) and Bushing Reamer (3) with long and short pilots. Tools used to remove worn fork slider bushings, install new parts and ream to size.

Part No. 96254-54 Bushing Tools for Front Fork (1972 and Earlier)

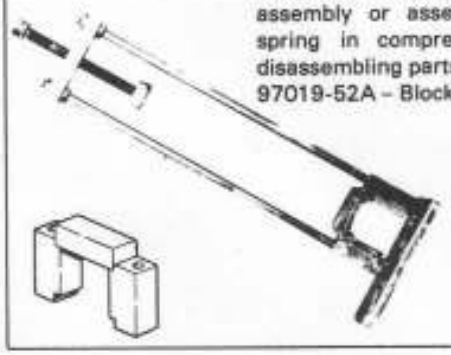

Simplifies shock absorber disassembly or assembly. Holds spring in compression while disassembling parts.
97019-52A – Block

Part No. 97010-52A Shock Absorber Tool

ENGINE 3

TABLE OF CONTENTS

	PAGE
General	3-1
Cylinder Head	3-11
Cylinder and Piston	3-17
Gearcase	3-23
Crankcase	3-35
Fuel System	3-45
Tools	3-69

GENERAL

SPECIFICATIONS

VALVES

Fit in guide (EX)	.0025-.0045 in.
Fit in guide (IN)	.0015-.0035 in.
Spring (Outer)	50-66 lbs at 1-9/32 in. (valve closed) 152-168 lbs at 15/16 in. (valve open)
Spring (Inner)	30-36 lbs at 1-3/32 in. (valve closed) 76-88 lbs at 3/4 in. (valve open)
Spring free length	1-1/2 in. (outer) 1-23/64 in. (inner)

ROCKER ARM

Fit in bushing	.001-.0025 in. loose

PISTON

Fit in cylinder	.003-.004 in. loose
Ring gap	.015-.025 in.
Ring side clearance	.0035-.005 in.
Piston pin fit	Light hand press fit at 70°F

CONNECTING ROD

Piston pin fit	.0008-.001 in. loose
End play between flywheels	.005-.015 in.
Fit on crank pin	.0005-.0015 in. loose

OIL PUMP PRESSURE

At 60 mph in high gear (oil hot)	
Minimum	4 lbs/sq in.
Maximum	15 lbs/sq in.

TAPPETS

Guide fit	.0005-.001 in. press
Fit in guide	.0005-.001 in. loose
Roller fit	.0005-.001 in.
Roller end clearance	.008-.010 in.
Tappet clearance	Just free (no lash) Engine cold

VALVE TIMING (At .050 tappet lift)

Intake opens	35.4° ± 3° BTC, intake closes 41.2° ± 3° ABC
Exhaust opens	44.3° ± 4° — BBC, exhaust closes 20.2° ± 4° ATC

GEARCASE

Intermediate gear shaft in bushing	.0005-.001 in.
Cam gear shaft in bushing	.0005-.002 in.
Cam gear shaft in needle bearing	.0005-.003 in.
Cam gear end play (1976 & earlier)	.001-.005 in.
(1977 & later)	.005-.012 in. except rear intake which is .004 to .010 in.
Cam gear backlash	.000-.0005 in.

FLYWHEEL ASSEMBLY

Gear shaft nut torque	100-120 ft-lbs
Sprocket shaft nut torque	100-120 ft-lbs
Crank pin nuts torque	150-175 ft-lbs
Pinion gear nut torque	50 ft-lbs
Runout (flywheels)	.003 in. maximum at rim
Runout (mainshafts)	.002 in. maximum

SPROCKET SHAFT BEARING

Cup fit in crankcase	.0005-.0025 in. tight
Cone fit on shaft	.0002-.0015 in. tight
End play	.001-.007 in.

PINION GEAR SHAFT BEARING

Shaft fit in roller bearing	.0005-.0015 in.
Shaft fit in cover bushing	.0005-.0015 in.

IGNITION TIMING

Breaker point gap setting	1970 .020 in. 1971 to 1978 .018 in.
Dwell	
1970-71	90° @ 2000 rpm
1972 & later	140° @ 2000 rpm
Spark plug gap setting	.025-.030 in.
Ignition timing (advanced)	
1971 & earlier	45° (11/16 in. BTC)
1972 & later	40° (17/32 in. BTC)
Ignition timing (retarded)	
1971 & earlier	15° (5/64 in. BTC)
1972 & later	10° (1/32 in. BTC)

DESCRIPTION

GENERAL

The engine is a two-cylinder, four-cycle, air cooled, overhead-valve, V-type engine. It has three major component assemblies: cylinder, crankcase and gearcase.

Cylinder assemblies include cylinder head, valves, rocker arms and piston. Cylinders mount on the engine crankcase in a 45 degree "V", with both connecting rods connected to a single crank pin.

The reciprocating, linear motion of the piston in the cylinder is converted to circular motion in the crankcase. The built-up crankshaft consists of an off-center crank pin interposed between two counterweighted flywheels which rotate on two end shafts (pinion gear shaft and sprocket shaft) supported by anti-friction roller bearings. The lower end of the rear cylinder connecting rod is forked to fit around the single-end front cylinder connecting rod, allowing a single connecting rod-crankpin connection to the flywheel.

Flywheel rotation is clockwise (viewing engine from right side). Using the front cylinder firing position as a starting point, the rear cylinder fires at 315 degrees rotation (360 degrees minus the 45 degrees between cylinders). The front fires in an additional 405 degrees (360 degrees plus the 45 degrees between cylinders), completing the 720 degrees of flywheel rotation necessary for the four piston strokes.

The gearcase is located on the right side of the crankcase and houses a gear train which operates and times the valves, ignition and generator.

The rotary crankcase breather valve is located between crankcase and gearcase compartments and functions to relieve crankcase pressure caused by downstroke of pistons, and controls the flow of oil in the lubrication system.

A cam gear train consists of four cam shafts. One cam lobe on each shaft is gear driven. The engine valves are opened and closed through the mechanical linkage of tappets, push rods and rocker arms. Tappets serve to transmit the cam action to the valve linkage. Valve and breather timing are obtained by meshing gearcase gears with timing marks aligned.

Ignition spark is produced by operation of circuit breaker, ignition coil and spark plugs. The breaking of a single set of breaker points by a double-lobe cam on the timer shaft determines the spark timing. The narrow lobe times the front cylinder. The wide lobe times the rear cylinder. Both spark plugs fire on each breaker point opening (twice per complete cycle of 720 degrees flywheel rotation since cam shaft operates at 1/2 engine speed). The valves are timed to produce combustion conditions in only one cylinder at a time so the spark in the other cylinder occurs ineffectually during its exhaust stroke.

Most other engine components function similar to usual internal combustion engine design. For further description of part function, see pertinent manual sections.

GASOLINE

CAUTION — Use a good quality "Premium" grade leaded gasoline. If "Premium" grade is unavailable, "Regular" grade may be used temporarily. Do not use unleaded grades such as "No-Leads."

LUBRICATION

GENERAL

The Sportster engine has a force-feed (pressure) type oiling system incorporating oil feed and return in one pump body, with one check valve on the oil feed side. The feed pump forces oil to the engine, lubricating lower connecting rod bearings, and rocker arm bushings. Valve stems, valve springs, push rods and tappets are lubricated by return oil from rocker arm bushings. Cylinder walls, pistons, piston pins and main bearings are lubricated by oil spray thrown off from connecting rods and crankshaft, and oil draining from rocker arm boxes through two holes in the base of each cylinder. The oil scavenging section of the pump returns oil to the tank from the engine. An oil slinger on the generator drive gear, located in the gear case compartment, separates oil from air escaping through the breather system.

CHECKING AND CHANGING OIL

Oil mileage normally varies from 250 to 500 miles per quart depending on the nature of service, fast or moderate driving.

Remove tank cap and dipstick and check oil supply at least every 300 miles after each complete refill, or more often depending on condition of engine. Oil tank capacity is 3 quarts ("FULL" mark on dipstick). Do not fill above "FULL" mark, as the tank needs some air space. When oil is down to "REFILL" or "ADD" mark on dipstick, one quart can be added. Never allow oil level to go down to "DANGER" mark on dipstick. XLCH Model: Dip stick has two marks. One quart should be added when level is near lower mark. Capacity of tank at upper full mark is 3 quarts. Tighten the cap securely to prevent leakage. Oil runs cooler and oil mileage is somewhat higher with oil level well up in the tank. Furthermore, unless oil tank is kept well filled, frequent checking of oil level will be necessary to avoid any chance of running dry.

Use proper grade of oil for the lowest air temperature expected before the next oil change period as follows:

Use Harley-Davidson Oil	Use Grade	Air Temperature (Cold Engine Starting Conditions)
Special Light	58	Below 40°F
Medium Heavy	75	Above 40°F
Regular Heavy	105	Severe operating conditions at high air temperatures (above 90°F).

After a new engine has run its first 500 and 1000 miles, and at 2000-mile intervals thereafter, completely drain oil tank of used oil and refill with fresh oil. If the engine is driven extremely hard, or used on dusty roads or in competition, drain and refill at shorter intervals. Draining should be done while oil is hot. It is not necessary to drain the crankcase as it does not accumulate used oil. At the time of the first 500 mile oil change, and at least every second oil change thereafter, thoroughly flush and clean out tank with kerosene to remove any sediment and sludge that may have accumulated.

CAUTION — Oil pump may lose prime because of air trapped in lines after system has been drained and refilled with oil. Be sure oil pressure signal light goes out within 3 minutes with engine operating at fast idle. If light does not go out, start up the engine and loosen plug in fitting (1976 and earlier) or pressure switch (1977 and later) at front of oil pump to allow about 3 ounces of oil to drain into can. This will allow any air in the oil feed line and passages to bleed out through the oil pump. Retighten plug or pressure switch to 12-16 in-lbs torque after air has been bled.

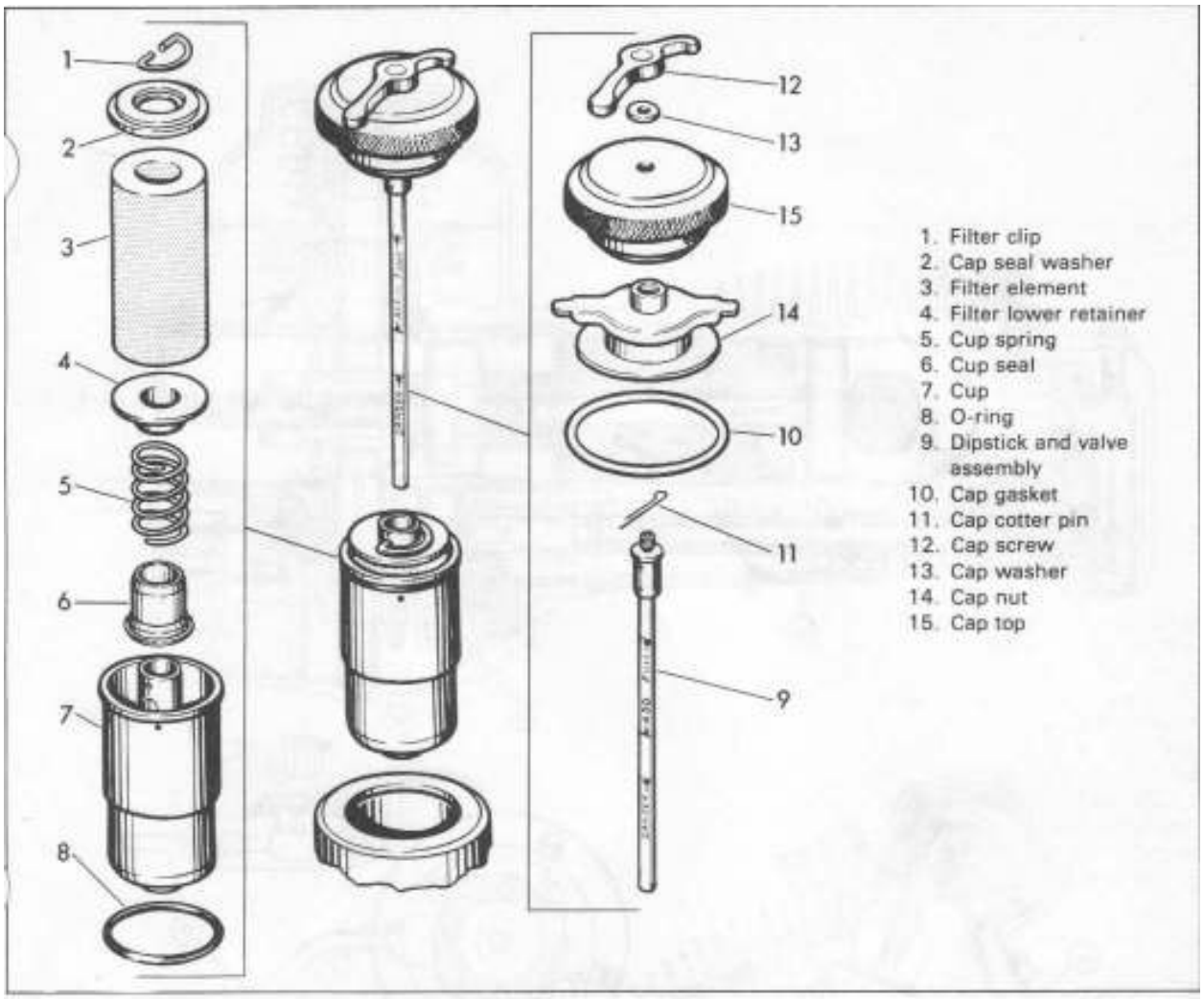

Figure 3-1. Oil Tank Filter - Exploded View

WINTER LUBRICATION

Combustion in any engine produces water vapor. When starting and warming up in cold weather, much of the vapor that gets into the crankcase condenses to water before the crankcase is hot enough to exhaust the vapor through the breather system. If engine is driven enough to get the crankcase thoroughly warmed up, most of this water is again vaporized and exits the crankcase through the breather system. However, a moderately driven engine making short runs, does not thoroughly warm up and is likely to accumulate water in the oil tank.

In freezing weather, this water will become slush or ice, and if allowed to accumulate too long, may block the oil lines and cause damage to the engine. Water mixed with oil for some time also forms sludge that is harmful to the engine and causes undue wear of working parts.

In winter the oil change interval should be shorter than normal, and any engine used only for short runs, must have oil drained frequently along with a thorough tank flush-out, before new oil is put in tank. The further below freezing the temperature drops, the shorter the oil change interval should be.

OIL PRESSURE SIGNAL LIGHT

When the "OIL" signal light lights or stays on, oil pressure is abnormally low or oil is not circulating through the engine. Proper operation is indicated when the light is off. The "OIL" signal will light when the ignition is turned on preparatory to starting engine. The light should be off when engine speed is approximately 1200 rpm. If the oil pressure signal light fails to go off at speeds above idling it is usually due to one of the following causes:

Empty oil tank, oil feed line clogged with ice and sludge (freezing weather) or air bound, grounded oil signal switch wire, defective signal switch, gear pin sheared in oil feed pump, diluted oil, defective oil pump check valve.

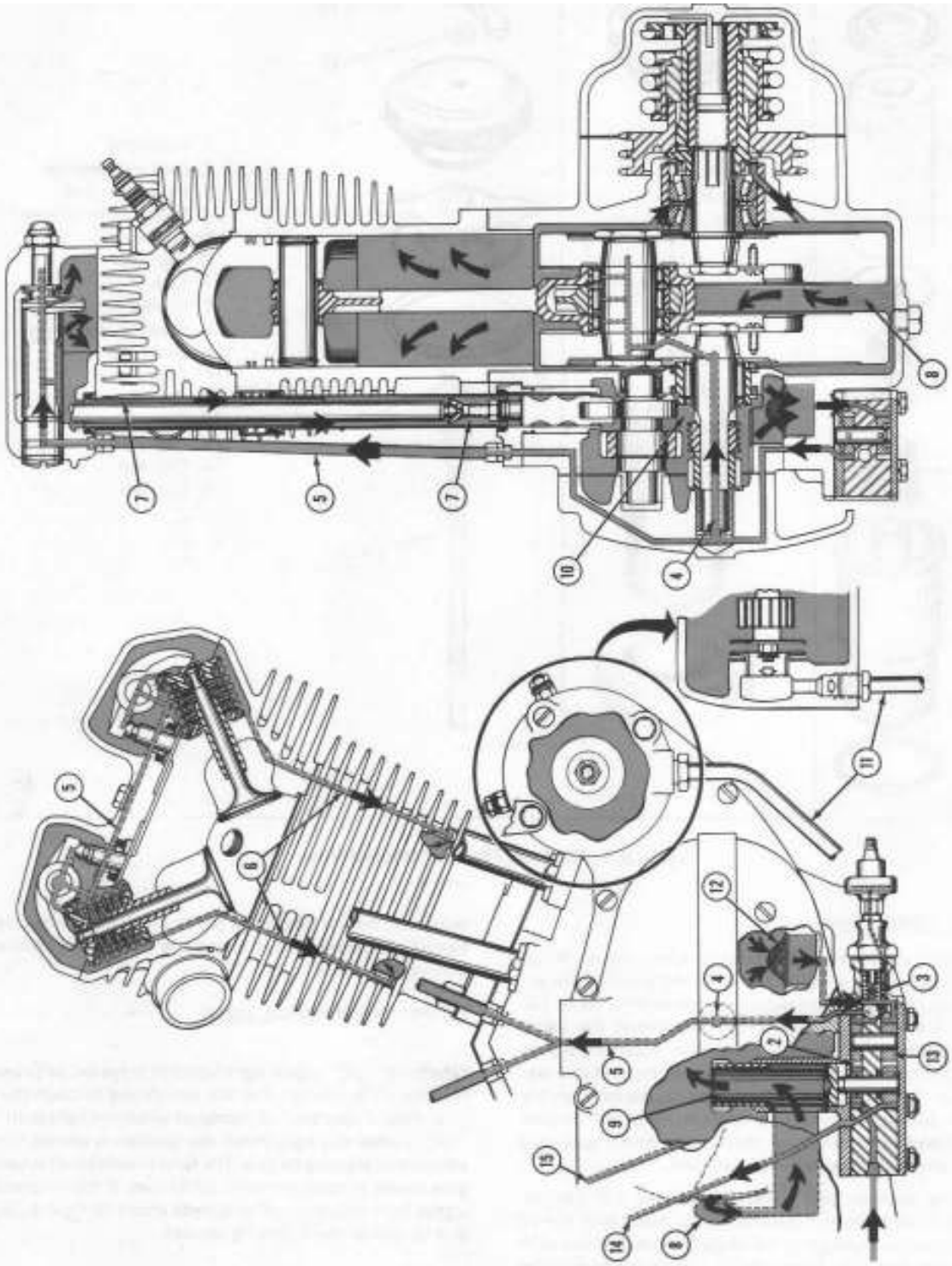

Figure 3-2. Oiling System (1976 and Earlier)

If the oil pressure signal light does not work when ignition is turned on, preparatory to starting engine, it is usually due to one of the following causes:

Defective signal switch, defective wiring, dead battery or burned out bulb.

OIL PRESSURE SIGNAL LIGHT SWITCH

The oil pressure signal light switch is a pressure actuated diaphragm-type switch. The diaphragm is spring-loaded. When oil pressure is zero or too low to open switch contacts, diaphragm is held against its contact by spring tension closing the circuit (indicator light "ON").

When engine is started, and as engine speed is increased, oil pressure is raised a sufficient amount to counteract the diaphragm spring and open the circuit (indicator light "OFF"). Oil signal light switch cannot be repaired. Defective switches must be replaced.

OIL PRESSURE

The oil pump is non-regulatory and delivers its entire volume of oil to the engine. When a cold engine is started, engine oil will be thick or viscous, restricting circulation through the oiling system and causing high oil pressure; as engine becomes hot and oil thins, pressure will correspondingly drop. Similarly, when an engine is operated at high speeds, the volume of oil circulated through the oiling system increases, resulting in higher oil pressure; as engine speed is reduced, volume of oil pumped is also reduced resulting in lower oil pressure.

To check oil pressure, use an accurate oil pressure gauge. Remove oil pressure switch from motorcycle as described in "DISASSEMBLING OIL PUMP CHECK VALVE." Insert pressure gauge hose fitting in oil switch connection of pump nipple.

Run the engine until oil becomes hot. Under normal riding conditions of oil pressure will vary from 4-15 psi at idle. Idle down and check the gauge. Oil pressure will vary from 3 to 7 lbs. To ensure that the oil is hot prior to checking, motorcycle should be driven 20 miles at or above 50 mph (see specifications).

SERVICING OIL FILTER (Figure 3-1)

Thoroughly wash filter element (3) in clean solvent at least every 2000 miles or whenever engine oil is changed. Renew filter element every 5000 miles. To disassemble filter, follow order of disassembly under Figure 3-1. Assembly is essentially the reverse order of disassembly. Be sure O-ring (8) is positioned in filter cup (7) flange.

SERVICING OIL TANK CAP AND OPENING (Figure 3-1)

Clean and inspect all parts replacing any that are worn or damaged. Pay particular attention to the oil tank cap gasket (10) and the cap washer (13). To disassemble tank cap follow order of disassembly under Figure 3-1. Assembly is the reverse order of disassembly.

If oil leakage should occur between the tank cap and the opening (and the cap and gasket are in good condition), check the lip of the opening. A tank cap drawn too tight will bend the lip of the opening resulting in a poor seat between gasket and lip.

Using a mallet as a driver and a piece of wood as a cushion, bend the lip down until flush with sealing surface of tank cap. Use emery cloth to remove any nicks or rough spots from lip.

IMPORTANT

Before refilling oil tank, thoroughly flush and clean tank with kerosene to remove any foreign material that may have fallen into tank.

OILING AND BREATHER SYSTEM (1976 AND EARLIER) (Figure 3-2)

1. Gravity feed to oil pump.

2. Feed section of oil pump.

3. Check valve prevents gravity oil drainage from tank to engine. Builds up oil pressure to operate oil signal switch.

4. Oil is forced through pinion gear shaft to lubricate lower connecting rod bearings from which oil splashes to cylinder walls, piston, piston pin and main bearings.

5. Oil is forced through oil lines to lubricate rocker arm bearings and rods, valve stems, valve springs and push rod sockets.

6. Oil drains from cylinder head through passages in each cylinder, then flows through two holes in the base of each cylinder, lubricating cylinder walls, piston, piston rings and main bearings.

7. Oil flows from the rocker arm boxes into the gearcase compartment, lubricating push rods, tappets, tappet-guides and tappet rollers.

8. Oil accumulated in crankcase base is scavenged by the flywheels to the breather oil trap.

9. The rotary breather valve is timed to open on the downward stroke of pistons, allowing crankcase exhaust air pressure to expel scavenge oil from crankcase breather oil trap into timing gearcase. Breather valve closes on upward stroke of pistons, creating vacuum in crankcase.

10. Oil blown and drained into timing gearcase (steps 7 and 9), lubricates generator drive gear, timing gears, gear shaft bearings, and also supplies oil to the rear chain oiler.

11. Crankcase exhaust air escapes from timing gearcase through outside breather tube. Any oil still carried by exhaust air is separated from the air by an oil slinger on the generator drive gear.

12. Gearcase oil flows through fine mesh oil strainer preventing foreign particles from entering scavenge section of pump.

13. Scavenge (return) section of oil pump.

14. Engine oil returns to tank.

15. Vent line from oil tank.

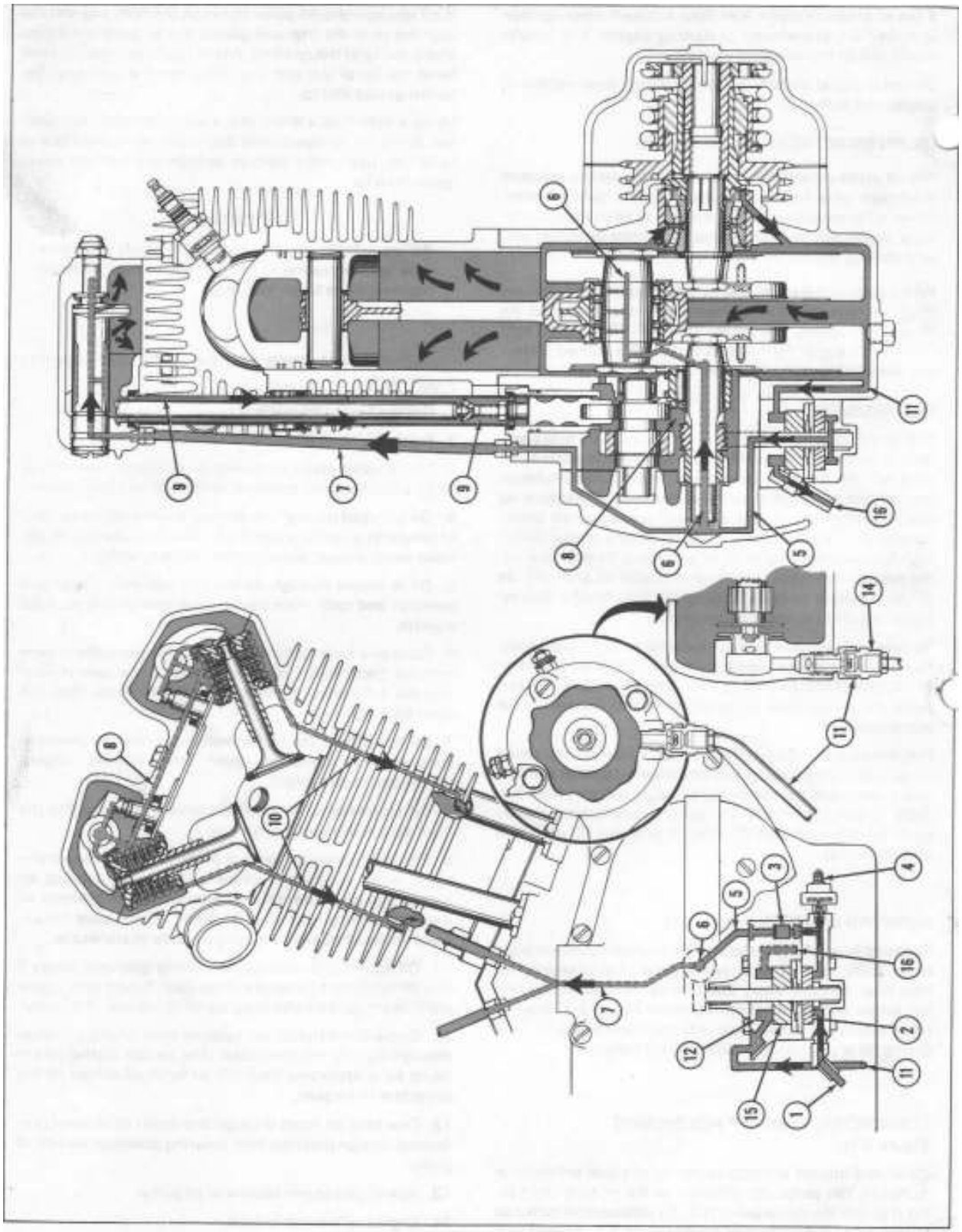

Figure 3-3. Oiling System (1977 and Later)

OILING SYSTEM (1977 AND LATER) (Figure 3-3)

1. Oil is supplied to the gerotor type oil pump by gravity feed from the oil tank. Oil enters the feed section and fills a cavity located under the feed pump.

NOTE

A complete explanation of the gerotor pump is given in "GEARCASE" section. See "OIL PUMP – 1977 AND LATER."

2. The feed pump transfers oil from the inlet cavity to the check valve located in the outlet line.

3. The one way check valve is preset to open at 4-6 psi oil pressure. This valve prevents gravity oil drainage from tank to engine and acts as a restriction to activate pressure switch.

4. When adequate pressure is produced, the oil pressure indicator light sending unit is activated and the check valve opens.

5. With the check valve open, oil flows into the right crankcase through a hole located in the oil pump gasket surface. Oil enters gearcase cover passage through hole in gearcase cover gasket.

6. Oil flow is then routed to both the crank shaft and the cylinder head areas. Oil enters a hole in the end of the pinion gear shaft and travels to the right flywheel where it is routed through the flywheel to the crank pin. Oil is forced out of the crank pin through three holes located to properly lubricate the rod bearing assembly.

7. Oil which does not enter the pinion gear shaft travels upward through the gearcase cover to the right crankcase. Oil flow continues through a channel in the crankcase to the overhead oil lines to both front and rear intake rocker arm shafts. The oil provides lubrication to the rocker arm shafts, bushings, intake valves and pushrods.

8. Oil flow continues around a groove machined in the outside diameter of the large end of the rocker arm shaft and through the rocker arm cover to the exhaust rocker arm shaft. The exhaust rocker arm bushings, valves and pushrods are lubricated in the same manner as described for the intake shafts.

9. Oil collected in the pushrod area of the cylinder heads flows down the pushrod covers to lubricate the tappets. Tappet rollers are lubricated by oil draining into gearcase through two drain holes in tappet.

10. Oil collected in the intake and exhaust valve spring pockets drains to the flywheel compartment through holes drilled in each cylinder. Oil returning from the heads, rod assembly and gearcase collects in the sump area below the flywheels.

11. Oil collected in the sump area returns to the scavenge section of the oil pump through a passage located in the rear section of the sump. Oil flow to the pump is accomplished by the scavenging effect of the pump and by the pressure created by the downward stroke of the pistons.

12. Return oil fills a cavity just above the scavenge pump. The pump transfers return oil to the outlet side of the pump and back to oil tank.

13. All engine breathing is accomplished through the gearcase into the breather system. Any oil still carried by the exhaust air is centrifugally separated from the air by an oil slinger on the end of the generator drive gear shaft.

14. Crankcase exhaust air is routed through a one way check valve to the air cleaner.

15. Scavenge pump.

16. Return oil to tank.

REPAIR PROCEDURE

GENERAL

When an engine needs repair, it is not always possible to definitely determine beforehand whether repair can be made with only cylinder head, cylinders and pistons removed from engine or whether engine must be completely disassembled for crankcase repair.

Most commonly, only cylinder head and cylinder repair is needed (valves, rings, pistons, etc.) and it is recommended procedure to service these units first, allowing engine crankcase to remain in frame. Follow the procedure under "STRIPPING MOTORCYCLE FOR ENGINE REPAIR," steps 1-5, 20-21, to strip motorcycle for removal of cylinder head, cylinder and pistons.

After disassembling "upper end" only, it may be found that crankcase repair is necessary; this requires removal of engine crankcase from chassis outlined under "STRIPPING MOTORCYCLE FOR ENGINE REPAIR," steps 6-19, 22-29.

In cases where it has been definitely determined beforehand that crankcase repair is necessary, the engine, completely assembled, should be removed from chassis as outlined under "STRIPPING MOTORCYCLE FOR ENGINE REPAIR," steps 1-29.

NOTE

The following stripping procedure applies directly to 1974 and earlier models. Models 1975 and later are similar, except that the brake and gear foot shift lever positions have been reversed on the motorcycle. The brake lever is now on the right side; the gear shift lever, on the left.

STRIPPING MOTORCYCLE FOR ENGINE REPAIR (See Figure 3-4 or 3-5)

1. Clean engine thoroughly with "Gunk" to remove all road dirt. Remove "Gunk" and dirt with water spray and blow engine dry with compressed air. Drain gasoline and oil. Remove battery cover and disconnect battery cables. Disconnect hoses from carburetor and remove bolts securing gasoline tank. Tank can then be removed from motorcycle.

Remove the following parts from right side of motorcycle.

2. Remove air cleaner assembly (3) including back plate and support brackets.

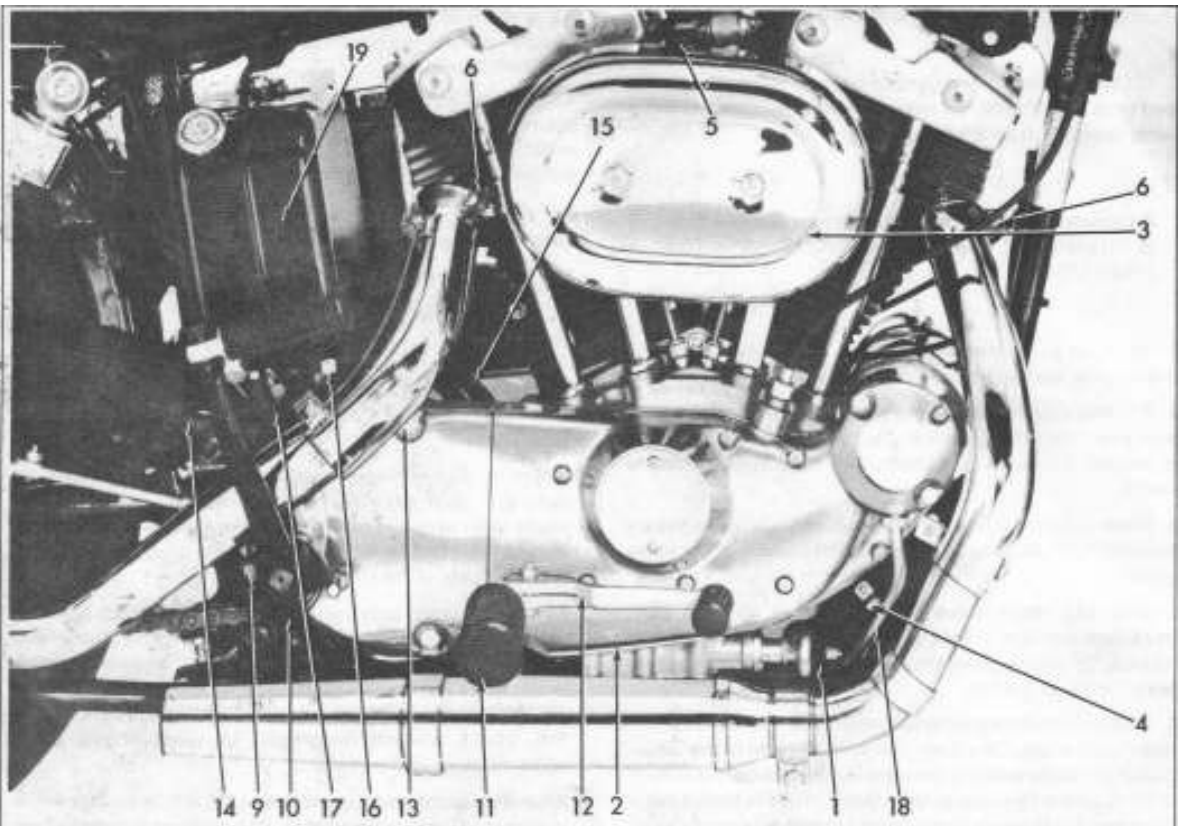

1972 Model XLCH

1. Oil pressure switch wire
2. Clutch control cable (1970)
2A. Clutch control cable (1971 & later)
3. Cleaner assembly
4. Clip
5. Engine support bolt location
6. Exhaust pipe port clamp (2)
9. Starter crank clamp bolt
10. Starter spring
11. Footrest
12. Gear shift foot lever (1974 & earlier)
12A. Brake foot lever (1975 & later)
13. Cover bolt (2)
14. Rear chain
15. Oil return line
16. Oil vent line
17. Oil feed line
18. Breather pipe
19. Oil tank

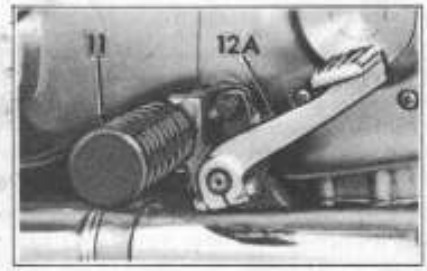

1975 & 1976 Models

Figure 3-4. Engine - Right Side View

3. Disconnect throttle and choke control at carburetor. Free throttle cable and support bracket from carburetor. Remove cable from between the cylinders and position cable out of working area (to front of frame). Remove carburetor.

4. Remove top engine support bracket bolt. Be sure to note the number of shim washers between cylinder head bracket and frame lug; these will have to be refitted when installing the engine.

5. Loosen exhaust pipe port clamps (6). Remove exhaust system from motorcycle.

6. On XLCH Model, remove starter crank clamp bolt (9) and with a screwdriver pry crank from shaft. Press down on end of starter spring (10), and at the same time pry spring off shaft.

7. Models 1974 and earlier, shift into high gear and remove footrest (11) and foot shift lever (12). Models 1975 and later, remove right footrest (11) and brake foot lever (12A).

8. Remove transmission sprocket cover bolts (13). With a mallet, lightly tap cover at the same time pulling cover from shaft. On 1974 and earlier models, disengage clutch cable end from clutch release lever by moving lever forward (as positioned on motorcycle), and disengage cable from lever. On 1975 and later models, detach shifter link from arm of shifter pedal cross shaft.

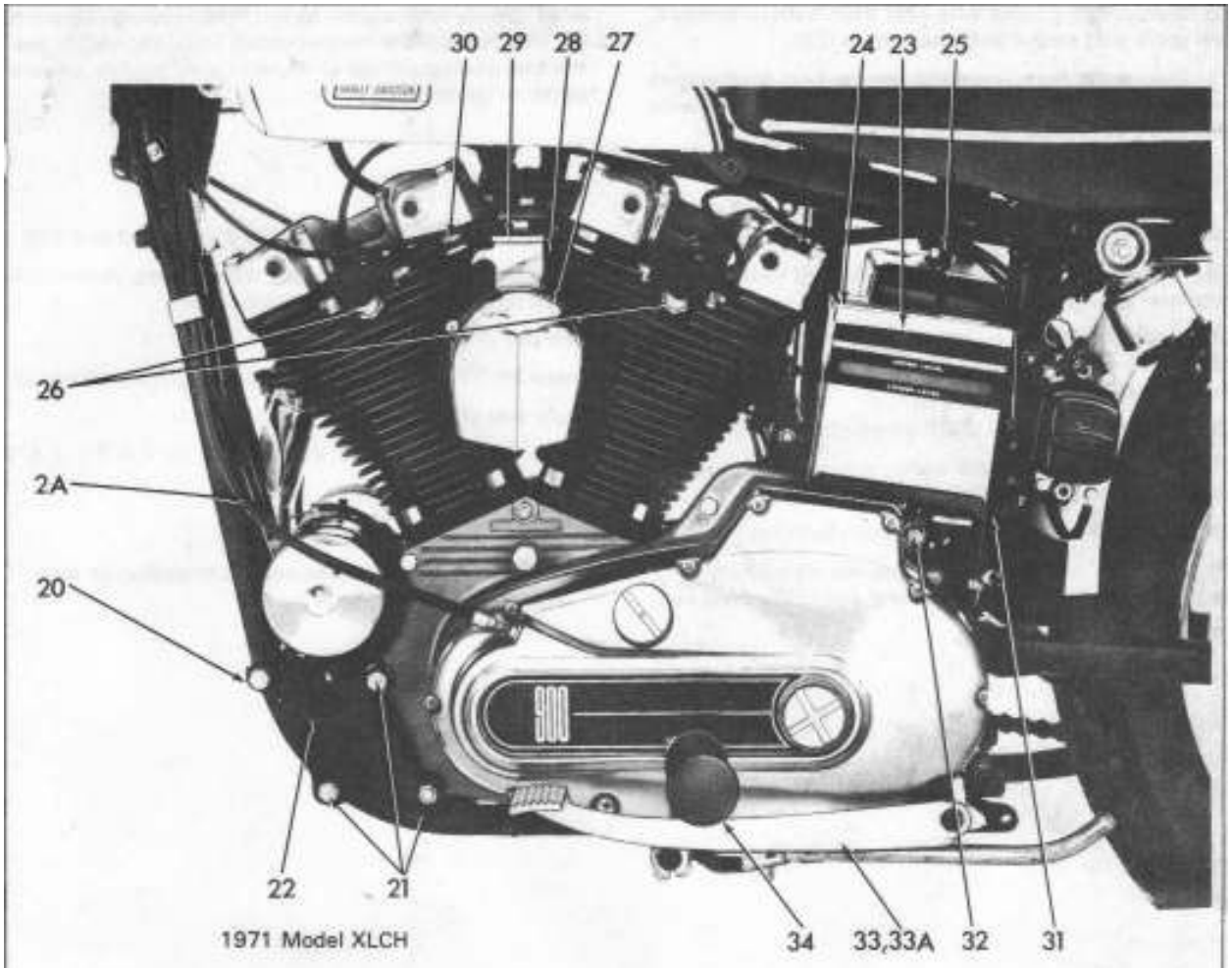

1971 Model XLCH

20. Top front end mounting bolt
21. Engine mounting bolts
22. Front bar bolt hole
23. Battery
24. Battery carrier
25. Ground wire
26. Spark plugs
27. Horn cover
28. Wire
29. Support bracket and choke control
30. Support bracket bolt
31. Regulator ground strap
32. Engine mounting bolt
33. Brake foot lever (1974 & earlier)
33A. Gear shift foot lever (1975 & later)
34. Left footrest

Figure 3-5. Engine - Left Side View - 1971 Shown

9. Disconnect rear chain (14).

10. Remove oil return line (15) at oil tank.

11. Free oil vent line (16) at oil tank and oil feed line (17) at engine.

12. Remove breather pipe (18) and disconnect oil pressure switch wire (1) from switch.

13. On 1970 models, pull clutch cable (2) forward (as positioned on motorcycle), until approximately 1 in. of cable remains in gearcase cover, at the same time press cable inward (towards oil pump), and down to free from gearcase cover. On 1971 and later models, disconnect clutch control cable at handlebar control lever.

14. Remove oil pressure switch from motorcycle.

15. Disconnect speedometer cable from speedometer drive unit (located under transmission sprocket cover). Disconnect tachometer cable.

16. Free speedometer cable from clip (4).

17. Remove lower front bar bolt.

Remove the following parts from left side of motorcycle.

18. Loosen, but do not remove, top front engine mounting bolt (20).

19. Remove three remaining engine mounting bolts (21) and lower front bar bolt (22).

20. Disconnect ground wire (25) from battery terminal, and spark plug cables from spark plugs (26).

21. Disconnect horn wires and remove horn from engine mount bracket. Remove two engine support bracket bolts (30) and free bracket assembly from engine.

22. Disconnect circuit breaker to coil wire (not shown).

23. Remove battery (23), battery carrier (24), and oil tank (19).

24. Remove two top rear engine mounting bolts (32) and regulator ground strap (31).

25. Models 1974 and earlier, remove rear brake foot lever and spring (33). Models 1975 and later, remove gear shift foot lever (33A).

26. Remove left footrest (34) from motorcycle.

27. Remove two lower rear engine mounting bolts, (located directly above rear brake crossover shaft).

28. Remove front top engine mounting bolt (20).

29. Engine is now free to be removed from chassis. Install a spare engine support bracket and with a hoist centered directly over engine, attach hook securely to bracket. Lift engine up off the mounting pad. Then, slip engine from left side of chassis, top of engine tipped slightly towards center of chassis.

INSTALLING ENGINE IN CHASSIS (Figures 3-4 and 3-5)

To install an engine assembly into chassis, reverse the stripping procedure in the following order:

Left side of motorcycle:

Steps 29, 27, 24, 23, 28, 19, 18, 25, 24, 22, 21, 23 and 20.

Right side of motorcycle:

Steps 15, 13, 16, 14, 12, 9, 8, 8A, 11, 10, 7, 5, 17, 3, 4, 2 and 1.

IMPORTANT

Be sure to check engine and transmission oil level before starting engine.

CYLINDER HEAD

REMOVING

Before removing cylinder head assembly, strip motorcycle as described in "STRIPPING MOTORCYCLE FOR ENGINE REPAIR," steps 1-5, 20-21. Free carburetor and manifold assembly from motorcycle by removing manifold clamps and carburetor support bracket nut at crankcase. Loosen two oil line nuts (2, Figure 3-7), and remove spark plugs.

See Figure 3-6, and proceed as follows: Open push rod covers as follows: Press push rod cover spring retainers (7) down and remove push rod cover keepers (2). Telescope upper push rod cover (8) into lower cover (4). To remove cylinder head assembly, turn engine over until both valves are closed in cylinder head (both push rods in lowest position). Remove cylinder head bolts (1, Figure 3-7). Remove cylinder head and rocker arm cover assembly (from left side of motorcycle), valve push rods and push rod covers and oil lines in one operation. If the cylinder head does not come loose on removal of head bolts, tap lightly with rawhide hammer. Never try to pry head off.

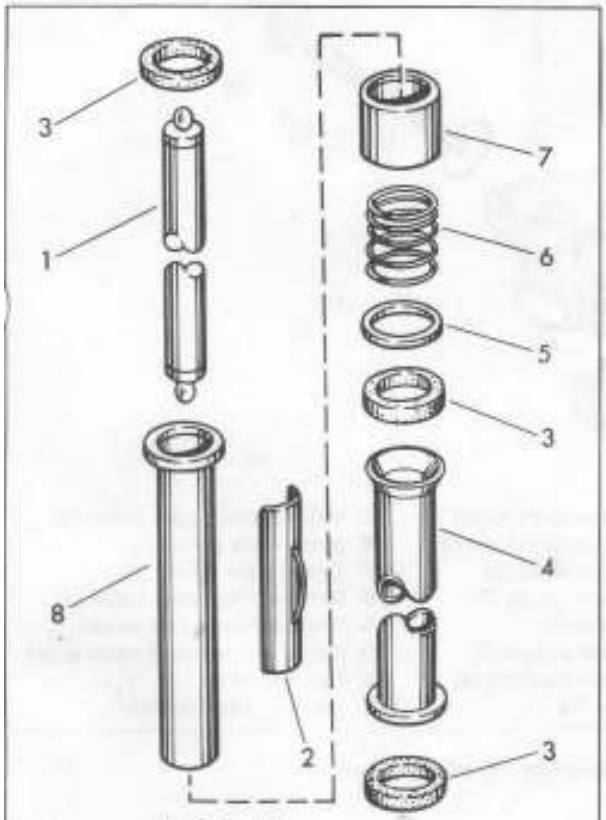

1. Push rod
2. Cover spring keeper
3. Cover cork washer (3)
4. Lower cover
5. Cover screw washer
6. Cover spring
7. Spring retainer
8. Upper cover

Figure 3-6. Push Rod Assembly - Exploded View

NOTE

With engine in chassis, the rear cylinder rocker arm cover and cylinder head must be removed from engine as an assembly. There is not enough clearance between rocker arm cover and frame to remove rocker arm cover only.

DISASSEMBLING (Figure 3-7)

Refer to Figure 3-7 and follow the order of disassembly. Remove the rocker arm cover (6) from cylinder head by removing cover bolts (4). Before further disassembly, carefully check the rocker arm pads and ball sockets for pitting and excessive wear. Also, check the rocker arm shaft (9) for appreciable play in the rocker arm bushings (13). If rocker arm assembly is noticeably worn, disassemble unit for further inspection and replacement of parts.

Remove rocker arm shaft screw and O-ring (7), acorn nut and washer (8). Discard shaft screw O-ring. Using a plastic or brass hammer, tap rocker arm shaft (9) from cover and remove the following parts: Spring (10), rocker arm (11) and spacer (12). Mark rocker arm shaft and arm in some manner so all parts may be returned to respective locations during assembly.

CAUTION — Rocker arms are not interchangeable. Exhaust rocker arms have extra oil hole to provide cooling on valve.

Compress valve springs using Valve Spring Compressor, Part No. 96600-36 (see Figure 3-8) and remove valve keys (14) from ends of valve stems. Remove valve spring collars (15 and 18), springs (16 and 17) and valves (19). It is customary to reassemble valves in same cylinder head from which they were removed; therefore, before removing, mark them in some manner to identify them with front and rear cylinder head.

CLEANING AND INSPECTING (Figure 3-7)

Thoroughly clean all parts and inspect them for wear and damage. Clean out oil passages with compressed air.

Inspect oil line nut rubber sleeve (2), if damaged or worn, replace when reassembling.

Carefully check the rocker arm (11) and shaft (9) for wear. Replace rocker arm bushings if shaft is over .002 in. loose in bushings. Examine the rocker arm pads. If rocker arm and ball sockets are worn and elongated, the rocker arms must be replaced.

Place cylinder head in "Gunk Hydro-Seal" until deposits are soft. Using a wire brush, clean carbon from cylinder head combustion chamber, inlet and exhaust valve ports. When cleaning carbon, be careful not to scratch or nick cylinder head face, as leakage will result. Blow off loosened carbon and dirt particles and wash head in solvent.

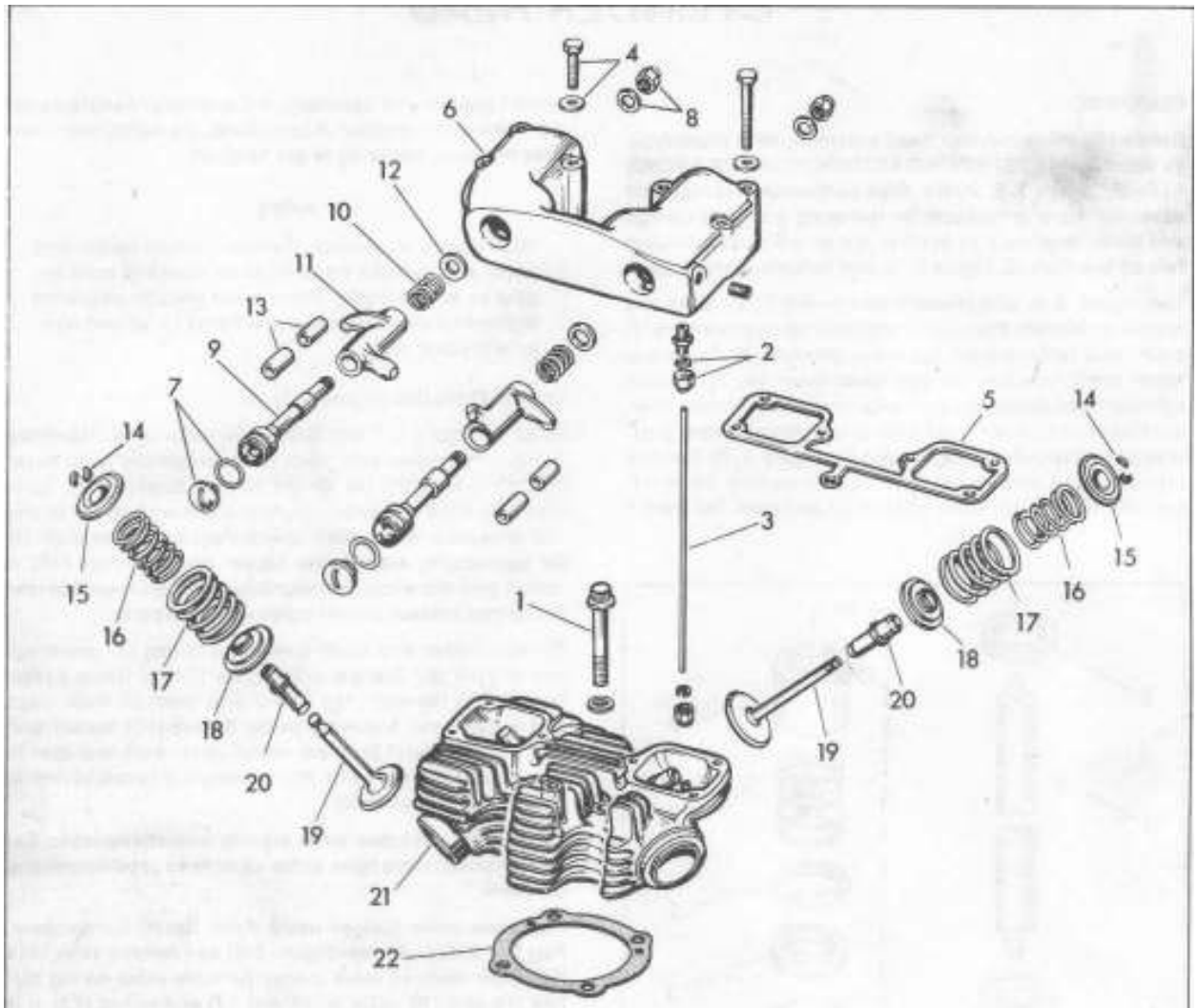

1. Cylinder head bolt and washer (4)
2. Oil line nut and rubber sleeve (2)
3. Rocker arm cover to crankcase oil line
4. Rocker arm cover bolt, washer (7)
5. Rocker arm cover gasket (2)
6. Rocker arm cover
7. Rocker arm shaft screw and O-ring (2)
8. Rocker arm shaft acorn nut and washer (2 each)
9. Rocker arm shaft (2)
10. Rocker arm spring (2)
11. Rocker arm (2)
12. Rocker arm spacer (2)
13. Rocker arm bushing (4)
14. Valve key (4)
15. Valve spring upper collar (2)
16. Inner valve spring (2)
17. Outer valve spring (2)
18. Valve spring lower collar (2)
19. Intake and exhaust valve
20. Intake and exhaust valve guide
21. Cylinder head
22. Cylinder head gasket

Figure 3-7. Cylinder Head Assembly - Exploded View

Force air through all oil holes in cylinder head to make sure passages are clean.

If the valve seat is pitted, burned, corroded or has any indication of improper valve seating, recondition the seat as described in "RECONDITIONING OR REPLACING VALVE SEATS." Replace any valve seat inserts that are cracked or loose in the cylinder head.

Check length and tension of each valve spring (16 and 17) using Valve Spring Tester, Part No. 96796-47. Replace spring if 1/8 in. or more shorter than a new spring, or compression shows 5 lbs. below low limit tension of new spring. Refer to engine "SPECIFICATIONS" for free length, compressed length and poundage of new valve springs.

Remove carbon from valve head and stem using a knife and wire wheel – never a file or other hardened tool that will scratch or nick valve. Polish valve stem with fine emery cloth or steel wool. Replace valves that are badly scored, warped or in bent condition. Reface valves that are slightly pitted, burned or in corroded condition as described in "GRINDING VALVE FACES AND SEATS."

Clean intake valve guide with a 5/16 in. reamer and exhaust valve guide with a 11/32 in. reamer, and examine for wear and valve stem clearance. Check the valve guide to make sure it is not loose in cylinder head. Replace guide, or possibly both valve and guide if either part is not within tolerances, described in engine "SPECIFICATIONS."

Inspect push rod (1, Figure 3-6) for damage and wear. Pay particular attention to the ball ends. If the ball ends are worn and flattened replace the push rod.

REPLACING ROCKER ARM AND BUSHINGS (Figure 3-7)

To replace worn bushings (13), press or drive them from rocker arm. If bushing is difficult to remove, insert a tap (5/8-11 thread) into bushing. From opposite side of rocker arm, drift out bushing and tap. Press or drive replacement bushing into rocker arm, flush with arm end, oil hole correctly aligned and split portion of bushing towards the top of arm. New bushings should be line reamed using Reamer, Part No. 94804-57. Repeat for other end of rocker arm. When reassembling rocker arm housing, install new O-Rings (7).

If the rocker arm pads show uneven wear or pitting, dress on a grinder, maintaining original curve. If possible, compare with a new unit during this operation to ensure a correctly contoured surface.

REPLACING VALVE GUIDES

Replacing valve guides if necessary, must be done before valve seat and face are ground since the valve stem hole in valve guide is the basis from which all face and seat grinding is done. Valve stem-valve guide clearance is as follows: Exhaust valves, .0025 in. to .0045 in. loose; intake valves, .0015 in. to .0035 in. loose. If valve stems and/or guides are worn to exceed the maximum tolerances by more than .002 in., new parts must be installed.

Tap out valve guides with shouldered drift pin (from chamber side) and insert replacement guide on arbor press. Be particularly careful to press replacement guide squarely into hole.

New valve guides are reamed to correct size. However, when guides are pressed into cylinder heads, they may close up slightly; also the ends may be burred. Therefore, after new guides are in place, they should be sized and cleaned with an expansion reamer.

It is of prime importance that valve guides fit tightly in cylinder heads, or valves may not seat properly. If original guide or new standard guide is not a tight press fit, an oversize guide must be installed. Oversize guides can be obtained .001 in. and .002 in. oversize. The number of grooves on O.D. indicates number of thousandths of an inch press diameter is oversize.

RECONDITIONING OR REPLACING VALVE SEATS

After installing valve guides, valve seats must be refaced to true them with guides.

If valves have been reseated several times, valve seats may have become too wide and/or valve may be seating itself too deeply in head. When valve seat becomes wider than 1/16 in. (see Figure 3-8) valve seat relief must be counterbored or ground to reduce seat to 1/16 in. Counterbore dimensions are shown. Tools for this purpose are available commercially. To determine if valve is seating itself too deeply in head, measure distance from shoulder of valve guide to end of valve stem. See dimension in Figure 3-8. When valve stem extends through guide in excess of maximum shown, valve seat inserts must be replaced.

A special gauge is available under Part No. 96489-63, which is used to measure this dimension. The tool consists of gauge valves and gauge which is placed over the valve stem as shown. If top end of gauge valve stem is between steps on gauge, the valve seat location is satisfactory.

Replacement inserts are available from the factory. Installation requires accurate boring equipment to machine correct counterbore in head for installation with .004 to .006 in. interference fit.

GRINDING VALVE FACES AND SEATS

Valve seat tools and fixtures are available commercially. Seat each valve in same port from which it was disassembled.

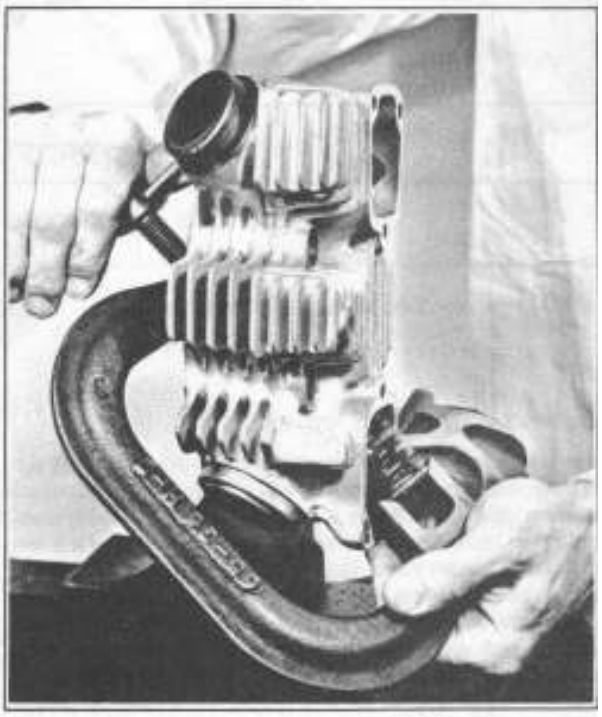

Figure 3-8. Valve Spring Compressor

Valve face angle is 45° for both intake and exhaust valves, and if a valve refacing grinder is used, it must be adjusted exactly to this angle. It is important to not remove any more metal than is necessary to clean up and true valve face. If grinding leaves the edge of valve very thin or sharp, install a new valve. A valve in this condition does not seat normally, will burn easily and may cause pre-ignition. There is also danger of cracking. Valves that do not clean up quickly are probably warped or too deeply pitted to be used. If end of valve stem shows uneven wear, true end of stem on a valve refacing grinder equipped with suitable attachment.

Intake valves are marked "IN" on head; exhaust valves are marked "EX."

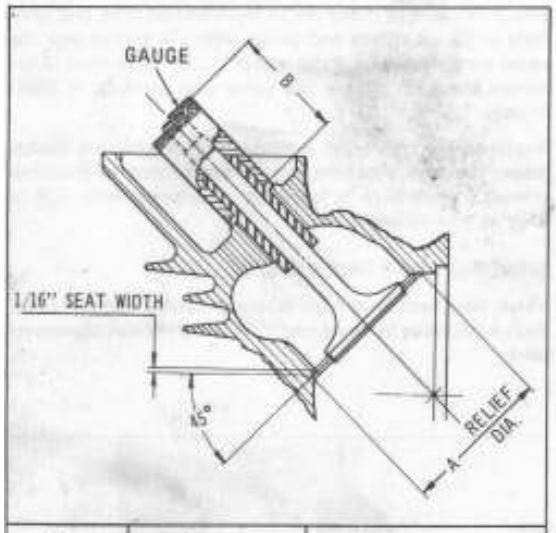

Valve	Relief Dia. A	B	
		Max.	Min.
Int. Exh.	2.120 1.62	1.420	1.375

Figure 3-9. Valve Seat Specifications

LAPPING VALVE FACES AND SEATS

If valve faces and seats have been smoothly and accurately refaced, very little lapping will be required to complete seating operation. Apply a light coat of fine lapping compound to valve face, insert valve in guide and give it a few oscillations with Valve Grinding Tool, Part No. 96550-36. Lift valve and rotate it about 1/3 of a turn. Repeat lapping procedure as shown in Figure 3-10. After full turn, remove valve, wash valve face and seat, and dry with cloth that is immediately discarded so grinding compound cannot be transferred to engine parts. If inspection shows an unbroken lapped finish of uniform width around both valve and seat, valve is well seated. If lapped finish is not complete, further lapping, or grinding and lapping is necessary.

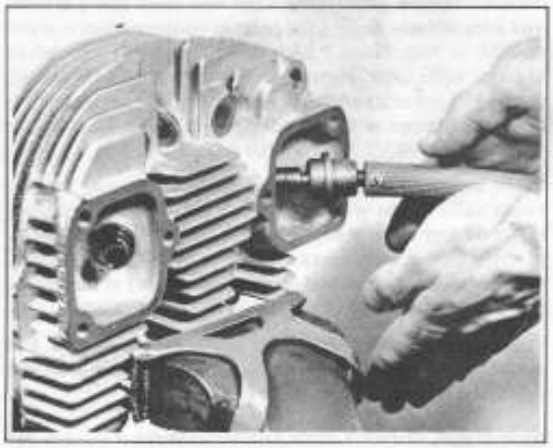

Figure 3-10. Lapping Valve Face and Seat

ASSEMBLING CYLINDER HEAD (Figure 3-7)

To install valve assemblies in cylinder head, reverse the disassembly procedure. Apply a light coat of oil to valve seats and stems. Be careful to insert marked valves (19) in their respective guides (20). Carefully seat lower valve spring collar (18) over valve guide. Install springs (17 and 16) and upper collar (15). Compress valve springs with Valve Spring Compressor, Part No. 96600-36. Position keys (14) in valve key groove using grease to hold them in place and slowly release compressor tool until keys are correctly locked in groove.

Position spacer (12) in countersunk hole in rocker arm cover. Install marked rocker arms (11) in their respective cover location. Compress spring (10) and position spring between rocker arm and washer. Apply a light film of oil to rocker arm shaft (9) and insert in cover assembly. Examine spring ends to be sure they are square with washer and rocker arm. Install and securely tighten acorn nut and washer (8) to 60-65 ft-lbs torque, shaft screw and new O-ring (7). Check rocker arm action to make sure it is not binding.

Carefully clean top of cylinder head and rocker arm cover faces, install a new gasket (5) and position rocker arm cover on cylinder head. Install rocker arm cover screws (4) with flat washer under head of each screw. Screws must be tightened evenly to attain a tight joint. First turn them snug; then tighten each one, 1/8 or 1/4 turn at a time until all are securely tightened to 20 ft-lbs.

INSTALLING CYLINDER HEAD (Figure 3-7)

To install the cylinder head assembly, reverse the order of disassembly. Clean top of cylinder and cylinder head faces and wipe them off with a clean rag.

Turn engine over so cylinder tappets are at their lowest position and install cylinder head, push rods and push rod covers in one operation. Install push rods in their original position in cylinder head. Be sure push rods register in tap-

pet screw sockets at bottom end and in push rod sockets at upper end. Install oil line (3) in head and crankcase connection using new rubber sleeves.

Install cylinder head bolts with flat washers under head of each bolt. Bolts must be tightened evenly to attain a tight joint. First turn bolts snug, then tighten each of them 1/8 or 1/4 turn at a time with a torque wrench until all are tightened to 65 ft-lbs. Follow same procedure for both cylinder heads. Make sure rubber sleeves are in place and tighten oil line nuts (2).

Before installing carburetor, replace intake manifold rubber O-rings. Assemble O-rings on manifold and then slip carburetor assembly into position aligning the hole in carburetor support bracket with top center crankcase stud. Just snug up stud nut. Carefully square manifold face with cylinder head intake port face and slip rubber O-ring onto its seat. Insert and tighten two manifold clamps. Tighten crankcase stud nut securely.

NOTE

There are likely to be air leaks around manifold-cylinder head joints, unless manifold is perfectly aligned with cylinder head intake port face, rubber O-rings are in good condition and manifold clamps securely tightened. Air leakage will affect carburetion, particularly at low speeds.

If all necessary steps have been taken and air continues to leak around manifold-cylinder head joints, it may be necessary to loosen the cylinder base nuts to allow final shifting and alignment of cylinder heads and manifold. Be sure to tighten base nuts after alignment.

Check tappet adjustment as described below and reassemble remaining parts.

ADJUSTING TAPPETS (Figure 3-11)

To get the maximum power and best all-around performance from an engine, keep valve tappets properly adjusted. They should be inspected and, if necessary, readjusted initially at 500 and 1000 miles and every 2000 miles thereafter.

Engine must be cold during tappet adjustment. As each tappet is readjusted, make sure it is at its lowest position, by turning engine ahead until the like tappet in the other cylinder is at its highest position (valve fully opened). The inlet valves are those nearest the carburetor.

To uncover tappets, press down on push rod cover spring retainer, and remove keeper at upper end. Raise lower cover. Loosen tappet adjusting screw locknut (3) and turn adjusting screw (2) downward (into tappet body) until push rod is just free and has noticeable up and down movement. Slowly turn adjusting screw upward (toward push rod) until nearly all play is removed. At this point, tighten tappet screw locknut 8-10 ft-lbs torque against tappet body (4) and recheck for correct tappet adjustment. A tappet is

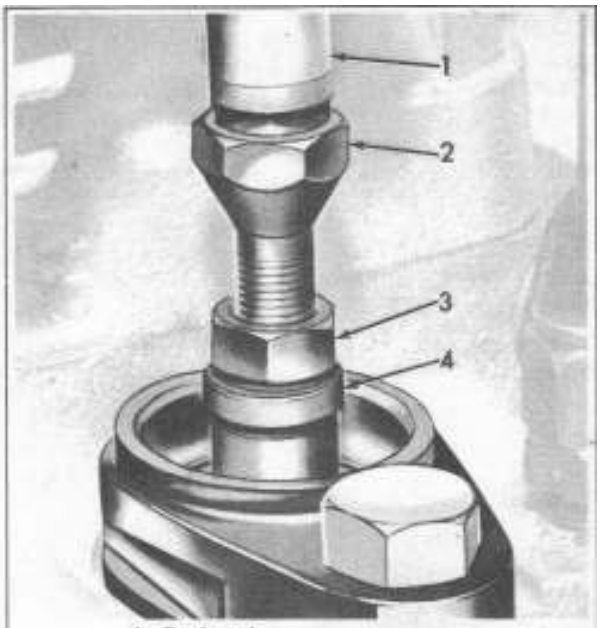

1. Push rod
2. Tappet adjusting screw
3. Tappet adjusting screw locknut
4. Tappet body

Figure 3-11. Adjusting Tappets

correctly readjusted when push rod has no up and down movement, and can be turned freely with finger tips, completely around, without trace of bind.

When reassembling push rod covers, make sure that both ends of covers are properly seated against cork washers.

REMOVING AND INSTALLING PUSH RODS ONLY (Figure 3-11)

Before attempting to remove push rod and cover assembly, turn engine over until tappet is at its lowest position. Turn adjusting screw locknut (3) all the way up to end of thread on adjusting screw (2). Turn adjusting screw (2) all the way down into tappet body. Remove push rod and cover assembly by lifting push rod upward and to one side, be careful not to bind push rod upper end in aluminum rocker arm housing. Doing so may result in a bent push rod. Install new cork washers (3, Figure 3-6) in aluminum rocker arm housing and in tappet guide, being careful not to damage them and making sure they are well seated. Replace cork washer (3, Figure 3-6) in push rod cover with a new one.

Reassemble push rod and push rod cover assembly in reverse order of disassembly. Check tappet adjustment as described in "ADJUSTING TAPPETS."

CYLINDER AND PISTON

REMOVING (Figure 3-12)

See "STRIPPING MOTORCYCLE FOR ENGINE REPAIR," steps 1-5, 20-21 and "REMOVING CYLINDER HEAD ASSEMBLY FROM ENGINE," this section.

See Figure 3-12, and proceed as follows: Clean crankcase around cylinder base to prevent dirt from falling into crankcase when lifting cylinders. Remove cylinder base stud nuts (1). Raise cylinder and piston just high enough to permit placing a rag over crankcase opening; this will prevent dirt and possibly pieces of broken ring from falling into crankcase. With piston at bottom of stroke, remove cylinder (2), discard cylinder base gasket (3). Using a piston ring expander (Figure 3-19) spring piston rings (4) outward until they clear grooves in piston (7) and lift off. Remove piston pin lock rings (5, 5A) from piston (7) groove. For 1976 and earlier models, use two sharp pointed instruments such as awls to remove ring. For 1977 and 1978 models, use Internal Lock Ring Pliers, Part No. 96215-49. Support piston and tap out piston pin (6) with a suitable drift.

Remove piston pin bushing (8) if necessary (see "CLEANING AND INSPECTION") using Piston Pin Bushing Tool, Part No. 95970-32A. Do not drive bushing out with a drift.

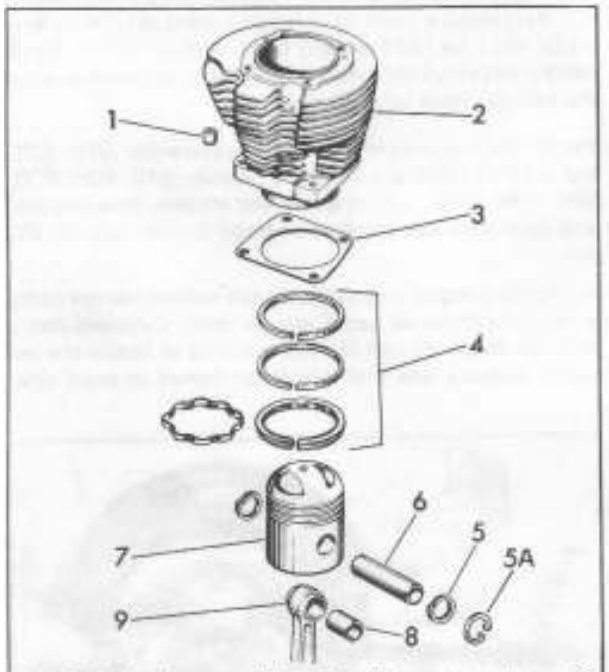

1. Cylinder base nut (4)
2. Cylinder
3. Cylinder base gasket
4. Set piston rings
5. Piston pin lock ring (2) (early 1977 and earlier)
5A. Piston pin lock ring (2) (late 1977 and later)
6. Piston pin
7. Piston
8. Piston pin bushing
9. Connecting rod

Figure 3-12. Cylinder and Piston - Exploded View

CLEANING AND INSPECTING

Place piston and cylinder in solvent or other carbon and gum dissolving agent until deposits are soft. Then thoroughly scrub piston and cylinder in solvent to remove deposits. Where carbon deposit is thick or hard, it is advisable to use a wire wheel to scrape carbon before cleaning. Use extreme care to avoid scraping into aluminum of pistons.

After parts are thoroughly washed, blow dry with compressed air. Force air through oil holes in cylinder. Clean piston ring grooves with a tool for cleaning ring grooves. Avoid scratching or damaging sides of ring grooves.

Examine piston pin to see that it is not loose in connecting rod, grooved, pitted or scored. If necessary, remove bushing as described in "DISASSEMBLING CYLINDER AND PISTON."

A piston pin, properly fitted, is a light hand press fit in piston and has .001 in. clearance in connecting rod upper bearing.

If difference in diameter of hole in piston pin bushing and diameter of piston pin exceeds a .002 in. fit, replace worn parts.

Replace piston pin lock ring with a new ring whenever it is removed from piston groove. If opposite side ring has not been removed and is undamaged, it is not necessary to disturb it.

Examine piston and cylinder for cracks, burrs, burned spots on piston dome, grooves and gouges.

On motorcycles using rod bearings with steel retainers (1976 and Earlier) check rods for end side shake (Figure 3-13). To make this check with accuracy, pistons should first be removed. When side shake (rod tip) at extreme upper end is 3/64 in. or more for front rod or 1/64 in. or more for rear rod, lower bearing should be refitted.

On motorcycles using rod bearings with aluminum retainers (1977 and 1978) side shake cannot be used to determine bearing wear. Instead, carefully check rod for up-and-down movement. To make this check accurately, pistons should be removed first. When appreciable up-and-down movement is found, lower bearing should be refitted.

These two procedures require removing and disassembling engine crankcase. See "CRANKCASE".

REFINISHING CYLINDERS

Piston and cylinders must be measured to see if they are worn to the point where cylinders must be refinished and oversize pistons installed.

Inside and outside micrometers used for cylinder-piston fitting should be checked together to be sure they are adjusted to read exactly the same. By subtracting piston measurement from bore measurement, amount of piston-cylinder clearance is obtained.

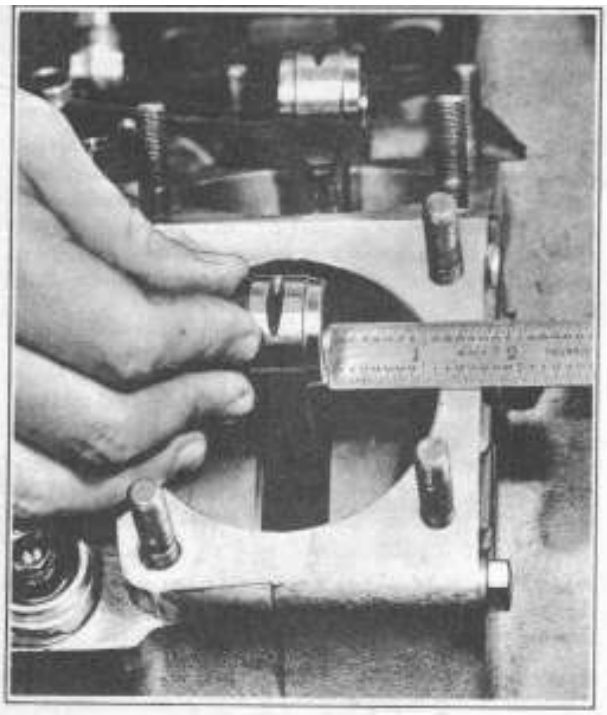

Figure 3-13. Checking Connecting Rod for Crankpin Bearing Wear on Engines With Steel Bearing Retainers (1976 and Earlier)

Bore measurement of a used and worn cylinder should be taken in ring path, starting about 1/2 in. from the top of cylinder, measuring front to rear then side to side. Repeat procedure at the center and at the bottom of the ring travel (see Figure 3-14). This process will determine if cylinder is out-of-round or "egged" and will also show any cylinder taper.

Piston measurement should be taken at extreme bottom of skirt, measured front to rear, 90° from center line of piston pin (see Figure 3-15).

If cylinders are not scored and above measurements do not vary more than .002 in., it is not usual practice to refinish oversize. If the total piston clearance is more than .006 in., a new standard piston, or piston of the same oversize to which the cylinder was last refinished, should be fitted to reduce clearance and effect reasonably quiet operation.

If cylinders show more than .002 in. variance, they should be refinished to the next oversize step and fitted with new corresponding pistons and rings.

Exact final size of the cylinder bore is determined by size of the piston to be used in that cylinder. Measure piston diameter accurately as described previously, then add desired piston clearance in cylinder. This will equal the exact final size to which cylinder bore should be refinished. Example: The .020 inch oversize 1971 piston to be used measures 3.0190 inches, adding .0025 inch (desired clearance) equals 3.0215 inches (finish-honed size). When cylinders require reboring to beyond oversize limit to clean up, (.030 in. for 1972 to early 1973 models; .070 in. for all other models) cylinder oversize limit has been exceeded and the cylinder must be replaced.

Pistons are available in the following oversizes: .010, .020, and .030 for 1972 to early 1973 models, .010, .020, .030, .040, .050, .060, .070 fo other year models. Oversize pistons have their size stamped on head; for example: 10, 20, etc.

In general practice only cylinders not scored and not badly worn are refinished using only a hone. Cylinders badly worn or deeply scored are first rebored to nearly the required oversize and then are finish-honed to exact size.

Figure 3-14. Measuring Cylinder

Figure 3-15. Measuring Piston

FITTING PISTON RINGS

If cylinders are worn less than the .002 in. maximum and refinishing is not necessary (unless they are scuffed or grooved), the same pistons may be used with the replacement of rings. However, before reassembling it is a good practice to rough up the cylinder wall with No. 150 Carborundrum emery paper or a No. 300 hone. This will remove any high spots, carbon or foreign material from the cylinder wall and at the same time provide a surface suitable for proper lubrication and ring seating.

Piston rings are of two types – Compression (plain face) and oil control. The two compression rings are positioned in the two upper piston ring grooves, chamfered side up. Rings are available in following oversizes to fit standard oversize pistons: .010, .020, .030, .040, .050, .060 and .070 in.

The rings must have proper side clearance in ring grooves. See "SPECIFICATIONS." Check with thickness gauge as shown in Figure 3-16. Gap between ends of rings when inserted squarely in cylinder bore must also be as specified under "SPECIFICATIONS."

Figure 3-16. Measuring Ring Clearance in Grooves

The oil control ring is a full width slotted ring using a spring expander.

To check ring gap place a piston in cylinder with top end of piston about 1/2 in. from top end of cylinder.

Set the ring to be checked in cylinder bore squarely against piston. With a thickness gauge, check ring gap as shown in Figure 3-17.

Use only standard size rings and piston in standard bore, and only matching oversize rings and pistons in same oversize bore.

If cylinder has been refinished oversize, use the correct oversize rings, fitting rings to give standard gap.

If gap is less than specified, ring ends may butt under expansion, and rings may be scored or broken. Gap may be increased by filing with a fine-cut file.

The two chrome plated compression rings, recognized by bright finish, are used in top and second ring grooves, with chamfer on one edge of the inside diameter facing top of piston when installed. Slotted oil control ring is used in bottom ring groove.

Figure 3-17. Measuring Piston Compression Ring Gap

Slip compression rings over piston into their respective grooves as shown in Figure 3-18. Be extremely careful not to overexpand, twist rings or damage the finely finished piston surface when slipping them into place.

Figure 3-18. Installing Piston Rings

CONNECTING ROD BUSHING

When connecting rod bushing is found tight in rod but is worn to excessive pin clearance (.002 in. or more) it is, of course, possible to repair it by reaming oversize and fitting an oversize pin. However, it is better practice to install a new bushing and ream it to fit a standard pin, except when piston to be used had previously been fitted with oversize pin or pin is loose in bosses, necessitating fitting with larger pin. The principal objection to fitting upper end oversize is that considerably more time is required for the job. New pistons obtained from factory are supplied correctly fitted with standard pin, and installing one is not difficult if the rod bushing is already reamed to standard size. If bushing has been reamed oversize, either new bushing must be installed and reamed to standard size or piston must be reamed oversize to fit an oversize pin, which involves extra time.

When removing bushings in connection with only a top overhaul, use special tools as shown in Figure 3-19, Bushing Tool, Part No. 95970-32A, and Connecting Rod Clamping Fixture, Part No. 95952-33.

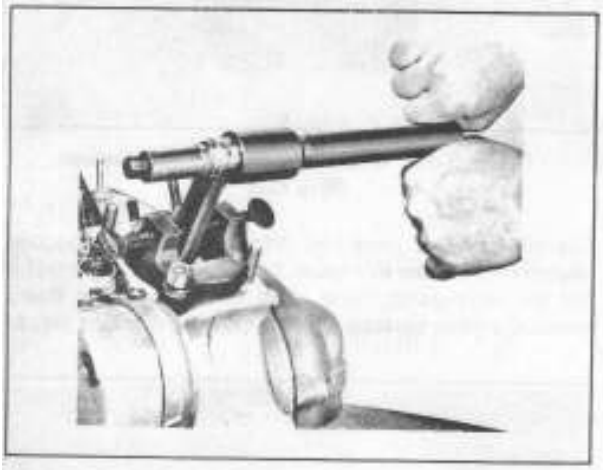

Figure 3-19. Installing New Connecting Rod Bushing

CAUTION — Oil slot in bushing must be in alignment with oil slot in rod.

Ream new bushing to size, or preferably, ream nearly to size and finish to exact size with a hone (Reamer, Part No.94800-26). A properly fitted pin should have .001 in. clearance; with this clearance, pin will have just noticeable shake in bushing. Fitting tighter is likely to result in a seized pin or bushing loosened in rod.

Oversize piston pins are available in .004 in. oversize.

After installing new piston pin bushings connecting rod alignment must be checked.

STRAIGHTENING CONNECTING RODS

In refitting and reassembling connecting rods, and finally fitting pistons, rods may possibly be bent or twisted, throwing upper bearing and lower bearing out of alignment with each other to some extent. Therefore, after pistons have been installed, rods must be checked and re-aligned as may be necessary. If a rod is left bent or twisted, piston has a "cocked" relation to cylinder bore and the result is excessive noise and rapid wear.

Check rod alignment by means of Piston Squaring Plate, Part No. 96181-26, as shown in Figure 3-20. Be sure crankcase face is clean and free from burrs so that squaring plate seats fully. On 1972 and later 61 OHV engine, use 2 spacers on studs to center the plate over cylinder hole in crankcase.

If a rod is in perfect alignment, piston bottom will rest squarely on plate with flywheels turned so that crank pin is in either forward or rear position. Keep in mind that this check, to be accurate, depends upon checking with crank pin in both forward and rear positions. It is the change of rod angle, resulting from changing crank pin from one position to the other, that influences the seat of piston on squaring plate and thus indicates whether or not rod is in alignment.

Insert narrow strips of very thin paper of equal thickness underneath piston, one on each side, below piston pin, as shown in Figure 3-20. Press piston down lightly with fingertips resting on center of piston head and pull first one paper, then the other, partially from underneath piston. If piston is perfectly square (rod in alignment), both will have the same amount of drag.

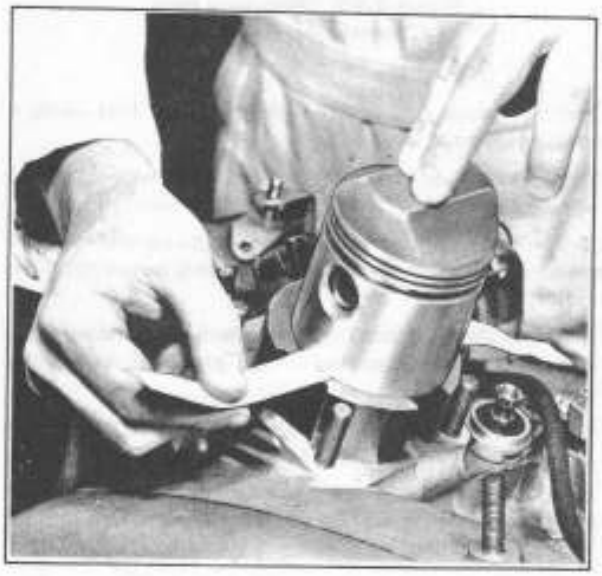

Figure 3-20. Checking Connecting Rod Alignment

If rod proves to be out of alignment, it can be straightened by means of a bar inserted through piston pin, as shown in Figure 3-21. Use a bar with a diameter as close to the hole diameter in the piston pin as possible. The manner in which piston seats on squaring plate indicates as follows:

1. Piston high on same side, both crank pin positions; rod is bent.

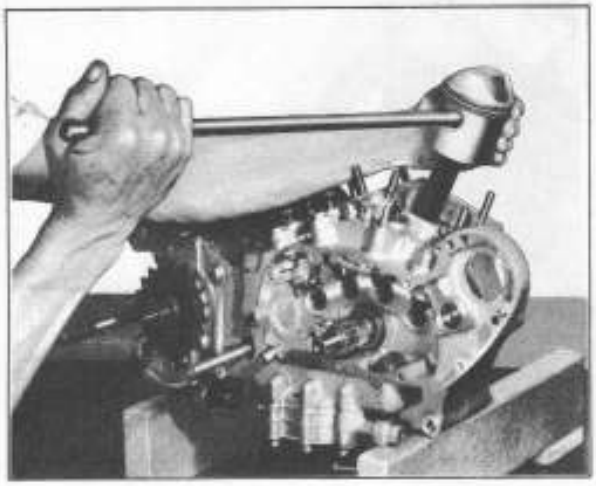

Figure 3-21. Straightening Connecting Rod

2. Piston high on opposite sides as crank pin position is changed; rod is twisted.

3. Piston square or nearly square with crank pin in one position and high on one side with crank pin in other position; rod is bent and twisted.

Correct as follows:

1. To straighten a bent rod, insert straightening bar through piston pin hole on low side of piston and apply upward force.

2. To straighten a twisted rod, insert straightening bar through piston pin hole on high side of piston, and if crank pin position is to front, apply force to rear – if crank pin position is to rear, apply force to front.

3. To straighten a bent and twisted rod, remove bend first and then remove twist. See above paragraphs, Nos. 4 and 5.

After rods have been aligned, check to see that pistons center in crankcase cylinder opening, without side pressure on upper rod ends. If further realigning is necessary to center pistons, correct by dressing off end of rod bushing on interfering side with a file. This allows the piston to shift slightly on rod to find a more suitable alignment of rod, piston and cylinder.

ASSEMBLING CYLINDER AND PISTON (Figure 3-12)

When connecting rod is true, remove squaring plate and attach piston so relief on piston dome for intake valve is toward intake valve when head is installed. Be sure one piston pin lock ring is in place. If the piston is heated the piston pin may be inserted into piston with a slip or light press fit.

After pin is in place, install new piston pin lock ring. Use special Lock Ring Tool, Part No. 96780-58A, as shown in Figures 3-22 and 3-23 for 1976 and earlier models. 1972 engine requires Part No. 96781-72 tool plug. 1977 and 1978 models require Internal Lock Ring Pliers, Part No. 96215-49. Make sure ring groove is clean and that ring seats firmly in groove. If it doesn't, discard the ring and install a new one. A lock ring loosely installed will rapidly loosen further in service and finally will come out of piston groove, resulting in both piston and cylinder soon being damaged beyond repair. Never install a used lock ring or a new one if it has been installed and then removed for any reason, always use a new lock ring.

Figure 3-22. Inserting Piston Pin Lock Ring in Tool (1976 and Earlier)

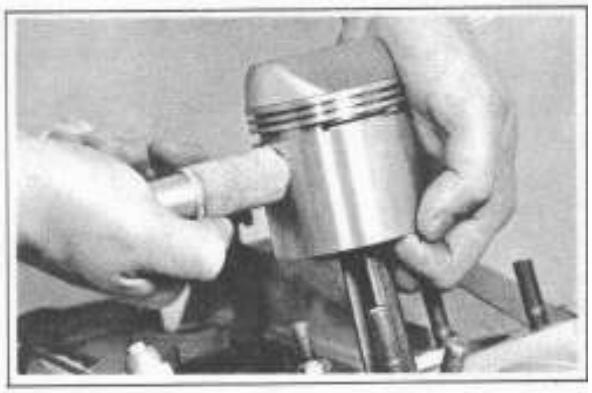

Figure 3-23. Installing Piston Pin Lock Ring in Piston (1976 and Earlier)

Lubricate cylinder walls, pistons, rings, pins and rod bushings with engine oil. Space ring gaps about equidistant around piston. Turn engine until crank pin is at bottom center. Install new cylinder base gasket. Position Piston Inserter Ring Tool, Part No. 96331-57, on piston and slip cylinder down over piston as shown in Figure 3-24. Install flat washers and nuts and torque nuts to 30 ft-lbs. Repeat process for other cylinder.

Assemble cylinder head and remaining parts of motorcycle as indicated in "INSTALLING CYLINDER HEAD ASSEMBLY."

Figure 3-24. Installing Cylinder on Piston

OIL PUMP (1976 AND EARLIER)

GENERAL

The oil feed and scavenger (oil return) pumps are gear-type pumps incorporated in one pump body with a check valve on the oil feed side. The feed section forces oil to the engine and the scavenging section returns oil to the tank.

The oil pump seldom needs servicing; therefore, before disassembling the pump for any repairs because of no oil pressure, be absolutely certain that all possible related malfunctions have been eliminated:

Check the level and condition of oil in the tank. If oil is diluted, pressure will be affected. In freezing weather, the oil feed line may clog with ice and sludge, preventing circulation of oil.

Check for a grounded oil pressure switch wire or a faulty switch if oil indicator light fails to go out with engine running. See "ENGINE LUBRICATION," for additional information.

Inspect the oil pump check valve. The check valve prevents the gravity flow of oil into the crankcase when the engine is not running and provides correct oil pressure for operation of the oil signal light switch. If the check valve is not seating correctly oil will bypass the valve and drain oil from the tank into the crankcase and on starting the engine, a considerable amount of accumulated oil will be blown through the crankcase breather pipe. If this condition exists, disassemble and inspect the check valve. See "DISASSEMBLING OIL PUMP CHECK VALVE."

If no oil pressure or return oil is indicated at the oil tank (return line) when engine is running, or an excessive amount of oil is blown from the breather pipe, (after all other possible troubles have been eliminated, including inspection of the oil pump check valve), disassemble the oil pump for further inspection and repair. See "DISASSEMBLING OIL PUMP."

When an oil pump has to be disassembled for repair, damage is usually caused by a foreign particle, such as a metal fragment, that has worked its way into the oil circulatory system. If this particle passes through the pump's protective screening, damage will result when it enters the pump. Primarily, the damage consists of a sheared oil pump drive lock pin (18, Figure 3-25), broken retaining ring (7, Figure 3-25) or subsequent damage to gears and other parts.

DISASSEMBLING AND ASSEMBLING OIL PUMP CHECK VALVE (Figure 3-25)

Thoroughly clean exterior of pump in cleaning solvent before disassembly. Disconnect oil pressure switch wire and disassemble switch (1) from motorcycle. Remove oil pump nipple (2). Free check valve spring (3) and valve (4) from pump body.

CLEANING AND INSPECTING OIL PUMP CHECK VALVE (Figure 3-25)

Clean all parts in cleaning solvent. Blow out pump nipple (2) oil passage and the nipple valve spring guide. Examine the nipple for any damage that would bind or hinder the free operation of spring (3). Carefully examine the nipple threads for wear; if badly worn replace nipple.

Inspect spring (3) for breakage and rusted condition. Replace if worn or damaged. Free length of new check valve spring (3) is approximately 1-15/64 in.

Carefully inspect the oil pump check valve ball (4) for wear and rusted condition. Valve may have rings formed by action on valve seat. Valve balls not perfectly smooth and round should be replaced.

Using a light, inspect valve seat in pump body (16) for pits and for dirty condition. A small particle of foreign matter lodged on valve seat will prevent check valve ball from seating. If seat is only slightly damaged place check valve ball on seat and with a drift lightly tap against its seat to remove slight marks or pits. Replace pump body if valve seat is badly damaged. See "DISASSEMBLING OIL PUMP."

ASSEMBLING OIL PUMP CHECK VALVE (Figure 3-25)

Assembly is essentially the reverse order of disassembly. Apply a light coating of oil to all moving parts. Make sure that check valve ball (4) is correctly seated and valve action is free. Be extremely careful to prevent dust, dirt or other foreign particles from getting on the parts when reassembling.

DISASSEMBLING OIL PUMP (Figure 3-25)

Because of interference from motorcycle frame it is necessary to remove engine to disassemble pump. First, remove the engine complete from the chassis and position on workbench. See "STRIPPING MOTORCYCLE FOR ENGINE REPAIR."

NOTE

It is not necessary to remove valve tappets and valve tappet guides to service the oil pump.

The breather is a part of and drives the oil pump. When removing the oil pump, the breather will of course come out with it. Removing the pump does not require removing the circuit breaker, gearcase cover or removing timing gears. However, it must be remembered that in order to correctly time breather and to check oil pump alignment, it is necessary to remove these parts.

See Figure 3-25. Thoroughly clean exterior of pump with cleaning solvent before further disassembly. Remove the five crankcase stud nuts that secure the oil pump to the crankcase. Slip the pump off the studs as one unit. If difficult to remove, take a piece of brass and tap on breather sleeve that extends into gearcase compartment. To disassemble the check valve see "DISASSEMBLING OIL PUMP CHECK VALVE."

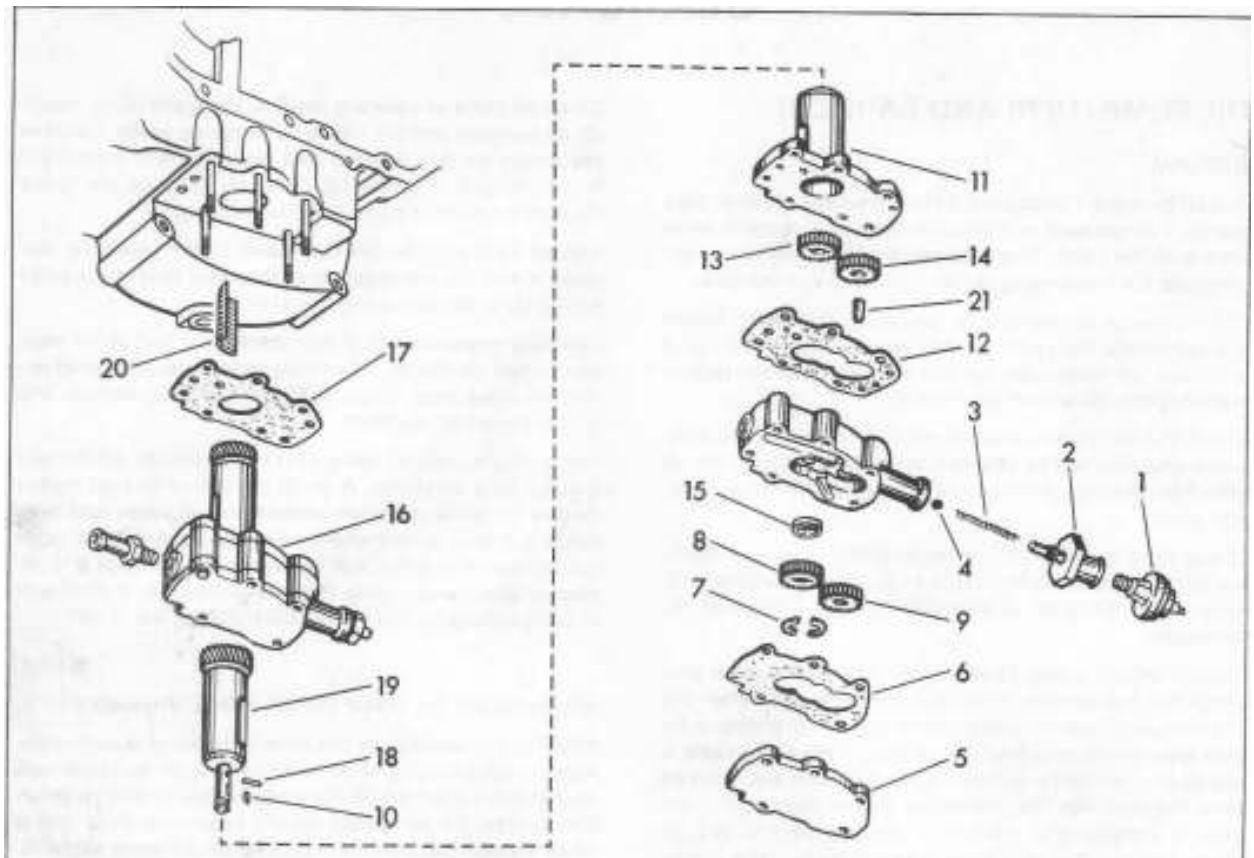

1. Oil pressure switch
2. Oil pump nipple
3. Check valve spring
4. Ball valve
5. Body plate
6. Body plate gasket
7. Retainer (2) (half ring)
8. Scavenger pump gear
9. Scavenger pump idler gear
10. Breather valve key
11. Oil pump cover
12. Body cover gasket
13. Pump gear
14. Pump idler gear
15. Oil pump seal
16. Oil pump body
17. Body gasket
18. Drive lock pin
19. Breather valve gear and shaft
20. Crankcase breather valve screen
21. Idler gear shaft
22. Feed line nipple

Figure 3-25. Oil Pump - Exploded View (1976 and Earlier)

Free the oil pump body plate (5) from pump body. Discard gasket (6). Remove split key (7), remove scavenger gears (8) and (9). Remove key (10). Free oil feed pump cover (11) and breather valve (19) as one assembly from pump body. Discard gasket (12). Free gears (13 and 14) from pump body. Pry oil seal (15) from pump body (16) and discard seal. Discard gasket (17).

With a punch remove lock pin (18) and free oil pump breather valve gear and shaft (19) from oil pump cover (11).

NOTE

Remove lock pin (18) only if inspection or replacement of shaft (19) and cover (11) is necessary.

Remove breather valve screen (20) from crankcase. Remove idler gear shaft (21) only if replacement is necessary. Shaft is a press fit.

CLEANING AND INSPECTING (Figure 3-25)

First clean all parts in cleaning solvent. Blow out all oil holes and passages with compressed air. Replace any parts that are worn or damaged.

Replace all gaskets (6, 12 and 17), lock pin (18) and oil pump seal (15) when reassembling. Be sure to always install new "factory made" gaskets. Never use "home-made" gaskets because they are a specified thickness with holes especially located for oil passage.

Check gear side clearance as follows: When feed gears are inserted in pump body, gear faces should be no more than .0005 in. below to .0025 in. above body gasket surface.

Carefully examine the pump body (16) for any wear. See "CLEANING AND INSPECTING OIL PUMP CHECK VALVE."

Examine gears (8, 9, 13 and 14) and oil pump breather shaft (19) and idler gear shaft (21) for damage or wear. If the breather valve key (10) is excessively worn and loose on shaft or gear, replace with a new one. Inspect pump body plate (5) and cover (11). If they are worn or damaged, replace them. Examine breather valve (19) and oil pump cover for any wear or damage that might affect its operation. Insert breather valve (19) in oil pump cover (11). Make sure valve turns freely in cover and does not bind.

ASSEMBLING OIL PUMP (Figure 3-25)

Reassembly of the oil pump is essentially the reverse order of disassembly.

Apply a light coating of engine oil to all moving parts before assembling.

Reassemble check valve. See "ASSEMBLING OIL PUMP CHECK VALVE."

Position breather valve screen (20) in crankcase using grease to hold in place. Insert breather valve gear and shaft (19) in oil pump cover (11). Press a new drive lock pin (18) into breather valve shaft. Lock pins are often damaged when removed; therefore, install new ones when reassembling pump.

Press a new idler gear shaft (21) into pump body if the old one was removed. Place gears (13 and 14) in pump body and install a new gasket (12) being very careful to correctly align the oil holes of the gasket with the pump body. Use a non-hardening gasket sealer.

Install oil pump breather valve gear, shaft and cover assembly on pump body (16). Place a very thin strip of acetate (Scotch) tape over shaft lock ring groove to avoid damaging new oil seal (15). Install seal carefully over shaft with lip side facing pump body, then remove tape from shaft. Press seal into body counterbore flush with surface.

Install gear key (10) and gears (8 and 9). Install retaining keys (7) in breather valve shaft groove. Assemble a new gasket (6) in place using a non-hardening gasket sealer. (If gasket is exceptionally dry and curled up, soak in water for a few minutes to soften before applying gasket sealer.) Position oil pump body plate (5) and install assembled pump in place on engine crankcase studs. Snug up the oil pump stud nuts evenly. Then, working opposite one another, tighten to 100 in-lbs torque to ensure correct alignment of the oil pump.

Before installing gears on pinion shaft, make sure pump gears turn with little or no binding. While a very slight bind or drag is permissible, gears should turn freely as possible. Binding is caused by slight misalignment of pump. If there is more than just noticeable bind, loosen five mounting stud nuts and shift pump as needed by tapping lightly with a soft mallet. It will not be possible to determine before hand in which direction pump must be shifted and it may require several attempts from different angles before alignment is attained.

After the oil pump is completely assembled to the crankcase and correctly aligned, it is necessary to open gearcase in order to time the breather valve. Disassemble timing gears, gearcase cover, circuit breaker and push rods; and time breather as described subsequently under Heading "GEARCASE AND TIMING GEARS." Install engine in chassis as described in "INSTALLING ENGINE IN CHASSIS," in this section.

OIL PUMP (1977 AND LATER)

GENERAL

The oil pump on 1977 and later models consists of two gerotor pumps, feed and scavenge (return), housed in one pump body. The feed pump forces oil to the engine while the scavenge pump collects and returns oil to the tank.

A gerotor type pump has two elements, an inner and an outer gerotor. The inner gerotor always has one less tooth than the outer gerotor. Both elements are mounted on fixed centers but eccentric to each other.

In a gear type pump, oil is transferred from the inlet to outlet side of the pump when it is trapped between the rotating gear teeth and the gear housing. In a gerotor pump, oil is transferred from inlet to outlet as it is trapped between the rotating inner and outer gerotors. Figure 3-27 shows the principle of gerotor operation. During the first 180° of rotation, the cavity between the inner and outer elements gradually increases in size until it reaches its maximum size – equivalent to the full volume of the "missing tooth." The gradually enlarging cavity creates a vacuum into which the oil flows from the inlet. During the next 180° of rotation the size of the cavity decreases forcing oil into the outlet.

Gravity fed oil from the tank enters pump through fitting (4) in Figure 3-26. It is forced by gerotor set (13) into valve (11). Valve (11) is a one-way valve that contains a spring loaded cup which maintains 1-1/2 psi pressure. Note that valve must always be installed in pump with arrow on side of valve pointing in direction of flow. From valve (11), oil exits pump under pressure into crankcase. Oil pressure is indicated by oil pressure switch (26).

Oil passages within the engine are shown in Figure 3-3. Return oil from the flywheel compartment is drawn back into the pump and is forced by gerotor set (20, Figure 3-26) back to tank.

The oil pump seldom needs servicing. Before disassembling the pump for any repairs because of no oil pressure, be absolutely certain that all possible related malfunctions have been eliminated.

See "ENGINE LUBRICATION," for additional information.

DISASSEMBLING OIL PUMP (Figure 3-26)

The oil pump can be removed with the engine mounted in the frame and without taking off the gear cover. All that is necessary is to disconnect oil lines and oil pressure switch wire and remove four bolts (1) that secure pump to crankcase. With bolts removed, pump will drop down. Disassemble pump as follows.

Lift cover (6) off body (24). Remove O-ring (7) from groove in cover (6). Slide both pieces of gerotor set (13) off shaft (22). Using a long-nosed pliers, pull pin (14) out of hole in shaft (22). With pin (14) removed, outer plate (15) can be lifted off shaft (22). Remove spring (17) and inner plate (18).

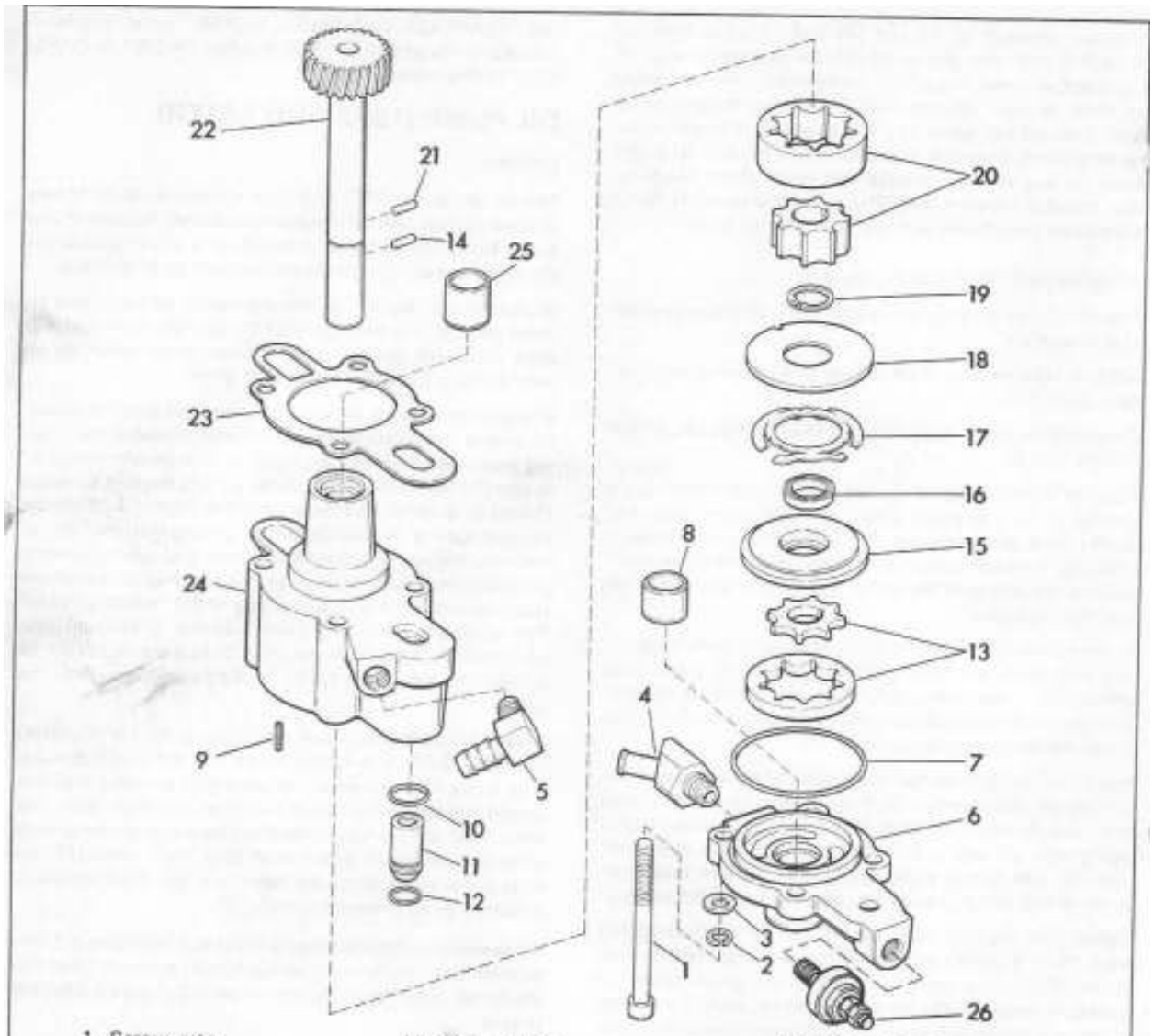

1. Screw, mtg.
2. Lockwasher
3. Washer
4. Fitting, feed
5. Fitting, return
6. Cover
7. O-ring, cover
8. Bushing
9. Roll pin
10. O-ring, body
11. Valve, check
12. O-ring, check valve
13. Gerotor set, feed (thin)
14. Pin, gear shaft
15. Plate, outer
16. Seal, outer plate
17. Spring washer
18. Plate, inner
19. Ring, retaining
20. Gerotor set, return (thick)
21. Pin, gear shaft
22. Shaft, gear
23. Gasket
24. Body
25. Bushing
26. Switch, oil pressure

Figure 3-26. Oil Pump - Exploded View (1977 and Later)

Do not remove seal, unless it is damaged and must be replaced.

Using external lock ring pliers, remove retaining ring (19) from groove in shaft (22). With ring (19) removed, slide gerotor set (20) off shaft (22).

Again using long-nosed pliers, pull pin (21) out of hole in shaft (22). Remove gear shaft (22) from body (24). Remove O-ring (10) from groove in body (24).

Remove check valve (11). Push out with a rod approximately 5/16 in. in diameter. This completes disassembly of the oil pump.

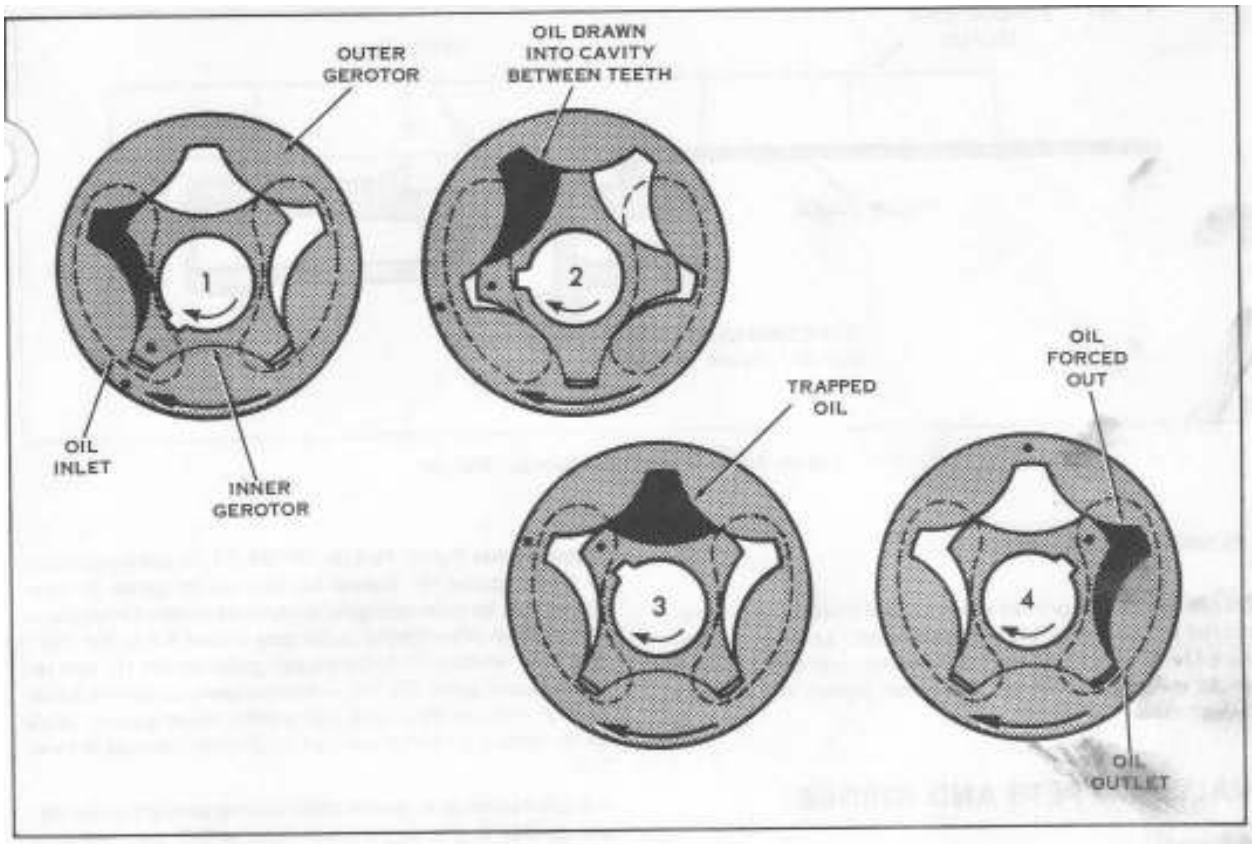

Figure 3-27. Principle of Gerotor Operation

CLEANING AND INSPECTING (Figure 3-26)

Clean all parts in a cleaning solvent. Blow out holes and passages with compressed air. Check parts for fit, wear, and damage.

Check O-rings (7), (10), and (12) and make sure they are without irregularities and seal tightly when in place. Inspect seal (16) to see that it is not deformed or worn.

Inspect valve (11) to see that it is not clogged. The spring loaded cup inside the valve should be free to move and should return to its closed, seated position. If the valve is damaged in any way, the complete valve assembly must be replaced.

Check spring (17) and replace if fingers are broken off.

Inspect both gerotor sets, (13) and (20). Each set is made up of an inner and an outer piece. Mesh the two pieces together as shown in Figure 3-29 and check for wear using a feeler gauge. The maximum wear limit is .004 in.

If either of the bushings, (8) or (25), is scored, worn or otherwise damaged, it should be replaced. Pull the old one and replace with a new one. The bushing to shaft clearance is .0005 in.

Check teeth of gear on shaft (22). If any teeth are broken or worn replace the shaft assembly.

Inspect gasket (23). Replace if it is torn or damaged.

ASSEMBLING

Reassemble in reverse order of disassembly. In addition, however, the following steps should be performed.

Place feed (thin) gerotor in cover. Using a straight edge and feeler gauge as shown in Figure 3-28, measure the distance gerotor extends above cover surface. The dimension should be .001 in. to .011 in. If the dimension is less than .001 in., remove gerotor and invert cover on a piece of sandpaper on a flat surface (#280 grit to start and #400 grit to finish) and sand cover ridge evenly until desired dimension is obtained.

Using a micrometer, measure the thickness of the feed gerotors. If they are not the same thickness, replace them as a set. The feed gerotors must be the same height when placed in the cover. If not, the cover is warped and must be replaced.

Lightly oil all moving parts prior to assembly (Figure 3-26). Position fingers of spring (17) toward plate (15). Gasket (23) should be coated with a sealer when placed on body (24). Reinstall seal (16) into groove of plate (15) with lip of seal facing the feed section of pump. Tighten screws to 100 in-lbs torque.

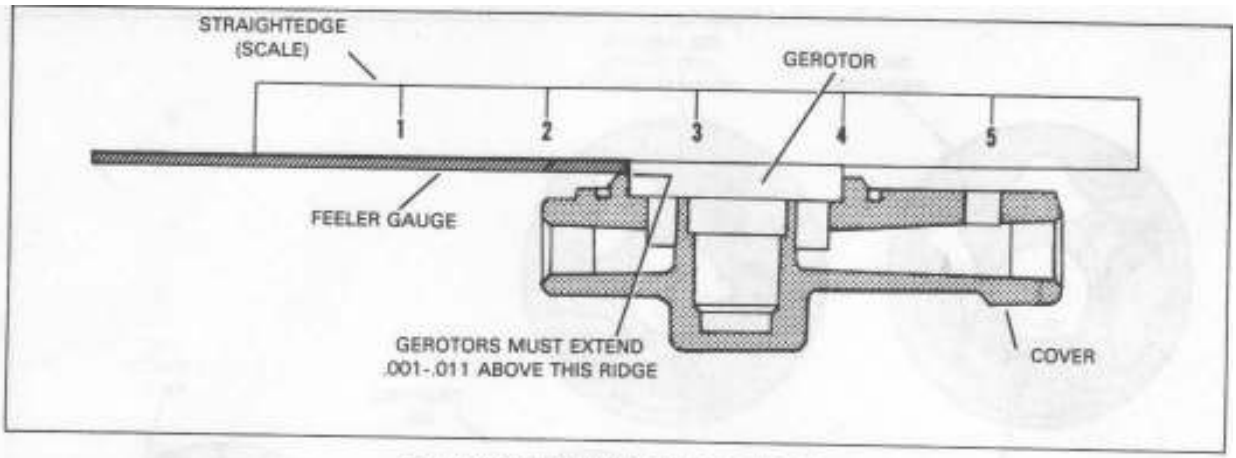

Figure 3-28. Measuring Gerotor Height

PRIMING OIL PUMP (Figure 3-26)

Oil pump must be primed whenever oil lines have been removed or pump has been disassembled. Loosen oil pressure switch (26) while engine is running and allow about 3 oz. of oil to be forced out. Retighten switch and connect switch wire.

VALVE TAPPETS AND GUIDES

GENERAL

Tappets and tappet guides seldom require replacement. Primarily, they are only removed for the purpose of checking end play of the cam gears, when reassembling an engine.

DISASSEMBLING (Figure 3-30)

Clean all dirt from around crankcase and blow loose particles from the area with compressed air. Remove push rods. This procedure is covered under "REMOVING AND INSTALLING PUSH RODS," this section.

For 1976 and earlier models guides are press fit into crankcase (see "SPECIFICATIONS," this section). Remove tappet guide screw (1) and tappet adjusting screw (2) and slide Tappet Guide Puller, Part No. 95724-57, in mating grooves of tappet guide (3). Before turning tappet guide (3) from crankcase, be sure cam gear is installed in case for tappet to butt against when using puller (see Figure 3-31). For 1977 and later models, remove tappet guide screw (1) and remove tappet guide (3). It may be necessary to remove cylinders to remove front and rear intake tappet guides. Mark valve tappets in some manner to identify them as to location.

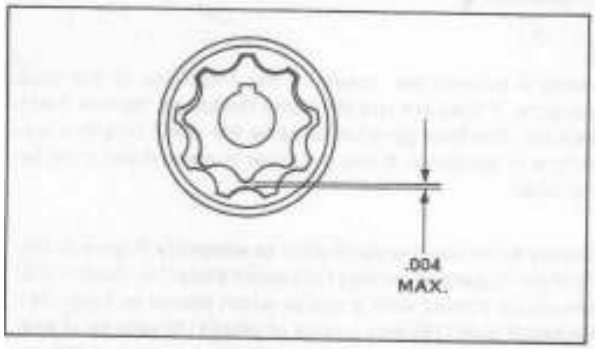

Figure 3-29. Gerotor Wear Limits

It is good practice to reassemble valve tappets and valve tappet guides in the same place from which they were removed. This will ensure an even wear pattern between tappet, guide and cam surface.

CLEANING AND INSPECTING (Figure 3-30)

Clean all parts thoroughly in cleaning solvent and blow dry with compressed air. Inspect valve tappets for excessive clearance in guides. Valve tappets should be loose in tappet guides. Excessive tappet-guide clearance is serviced by fitting new tappet, and/or new guide. It is recommended practice to replace complete tappet when only the roller is excessively loose or badly worn; however, it is possible to replace tappet roller kit (6) individual parts. If this is done, roller must turn freely on needle bearings and have side-play after new roller pin is securely riveted to tappet. See "SPECIFICATIONS."

If end of valve tappet adjusting screw is damaged, worn egg shaped or pitted from action of push rod, it should be replaced to ensure accurate tappet-valve stem adjustment.

Discard O-ring (5, Figure 3-30) and replace with a new one.

ASSEMBLING (Figure 3-30)

Assembly is essentially the reverse order of disassembly. Apply a light coat of oil to the tappet and in particular, the tappet roller assembly and O-ring. If tappet is not located correctly in guide, tappet roller will be crosswise to guide and cam, and serious damage may result when installed in crankcase.

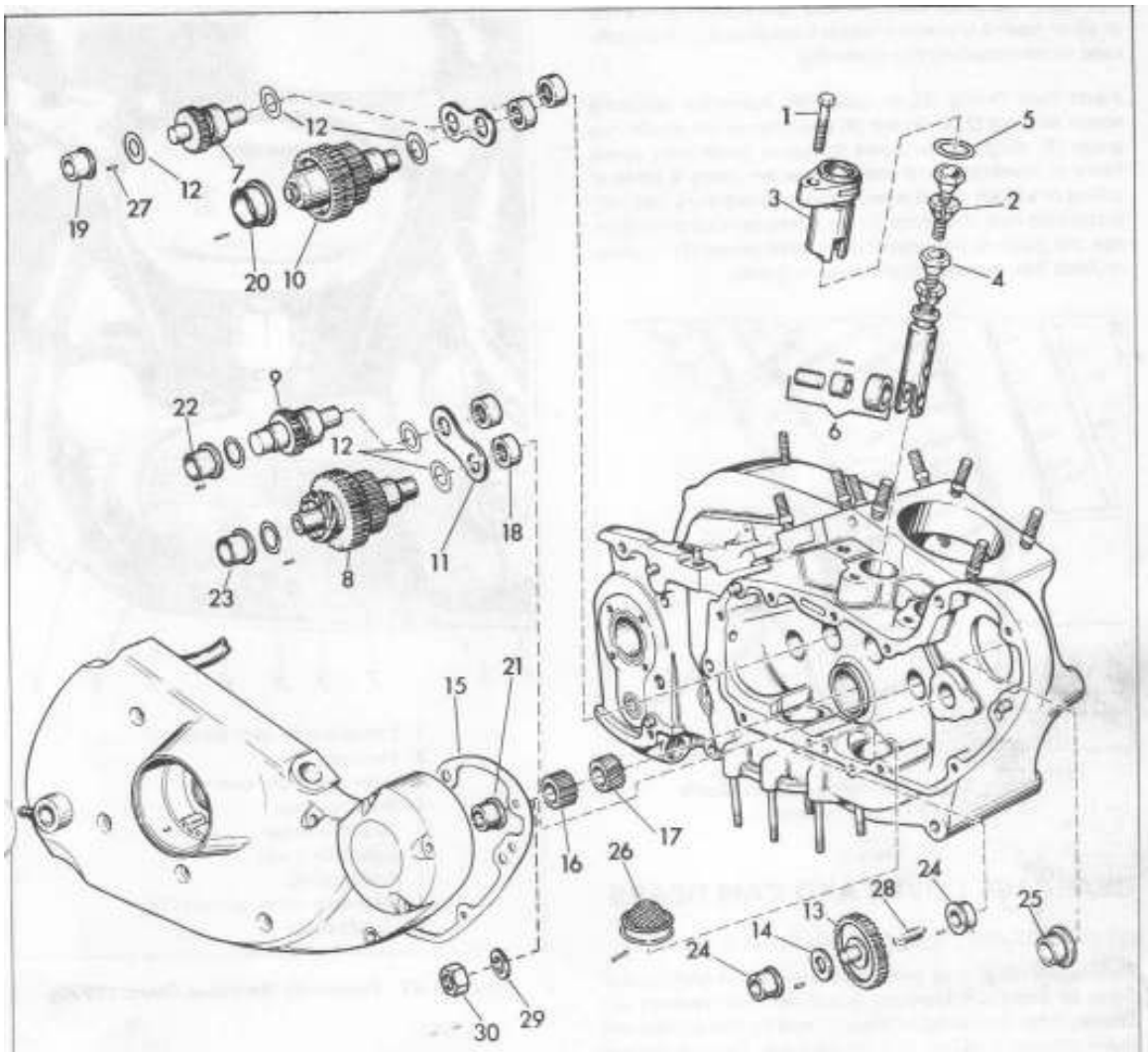

1. Tappet guide screw
2. Tappet screw with nut
3. Tappet guide
4. Tappet and roller
5. Tappet guide O-ring
6. Tappet roller kit
7. Rear cylinder exhaust cam gear
8. Rear cylinder intake cam gear
9. Front cylinder intake cam gear
10. Front cylinder exhaust cam gear
11. Cam gear plate (2)
12. Cam shaft washer - .005, .007 in.
13. Idler gear
14. Idler gear shaft fiber washer (1975 & earlier)
15. Gearcase cover gasket
16. Flywheel shaft pinion gear
17. Oil pump drive gear
18. Cam gear needle roller bearing (4)
19. Rear exhaust cam gear shaft bushing
20. Cam gear and timer shaft bushing
21. Pinion gear shaft bushing
22. Front intake cam gear shaft bushing
23. Front exhaust cam gear shaft bushing
24. Idler gear shaft bushing (2)
25. Oil separator bushing
26. Crankcase oil strainer, retaining pin and gasket (1976 and earlier)
27. Gearcase cover bushing pin (7)
28. Idler gear shaft
29. Lockwasher (1977 and later)
30. Nut (1977 and later)

Figure 3-30. Gearcase and Tappet - Exploded View

Pull tappet out to limit of travel and hold in place with a clip or other means to prevent tappet from dropping into crankcase when installing the assembly.

Insert new O-ring (5) on guide (3). Assemble adjusting screw and nut (2) in tappet (4) and then insert tappet into guide (3). Align screw holes in tappet guide with screw holes in crankcase and install assembly using a piece of tubing or a block of soft wood. Tappet guides are a soft malleable cast iron, therefore, be extremely careful not to damage the guide during installation. With screw (1) in place, recheck free movement of tappet in guide.

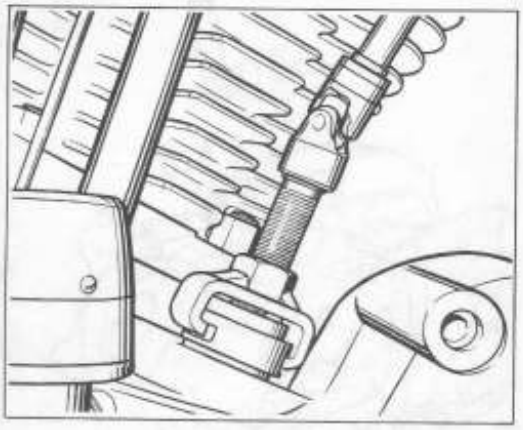

Figure 3-31. Removing Tappet Guide (1976 and Earlier)

GEARCASE COVER AND CAM GEARS

DISASSEMBLING (Figure 3-32 and Figure 3-33)

Thoroughly clean area around gearcase cover and tappets. Blow all loose dirt from crankcase with compressed air. Loosen exhaust pipe port clamps (1) and muffler clamps and lower exhaust pipe free of gearcase cover. Remove footrest (2), gear shift foot lever (3), 1974 and earlier, and breather pipe (4). For models 1975 and later, remove footrest (2), along with rear brake foot lever (3A), and breather pipe (4). On 1970 models remove circuit breaker (5).

Remove push rods (7) as described in "REMOVING AND INSTALLING PUSH RODS."

On 1971 models, remove two circuit breaker cover screws, cover and gasket. Remove circuit breaker cam assembly bolt, two circuit breaker hold down screws, lockwashers and washers or retainer and circuit breaker advance assembly. See "CIRCUIT BREAKER" Section 5.

Place a pan under gearcase to collect oil when cover is removed. Remove gearcase cover screws (8) and generator mounting screws (9). Free cover from crankcase. Cover is located on dowel pins which fit rather snugly. The cover must be worked off these pins carefully to avoid damage to joint faces. Do not pry off with screwdriver inserted between joint faces. Use a hammer and a block of wood, and

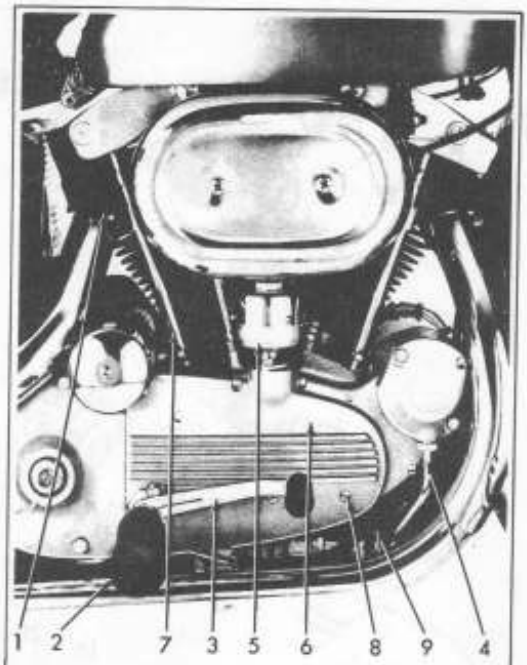

1. Exhaust pipe port clamp (2)
2. Footrest
3. Gear shift foot lever
4. Breather pipe
5. Circuit breaker
6. Gearcase cover
7. Push rod (4)
8. Gearcase cover screw (11)
9. Clutch cable

Figure 3-32. Removing Gearcase Cover (1970)

tap lightly at the end where the cover projects beyond the gearcase. Note that oil tank vent hose is clamped to gearcase cover fitting and must be disconnected before cover can be completely removed from motorcycle.

Remove valve tappets and valve tappet guides only to establish correct cam gear end play. See "VALVE TAPPETS AND VALVE TAPPET GUIDES." On 1970 models, pull clutch cable (9) forward (as positioned on motorcycle), at the same time press cable inward and down to free from gearcase cover.

Refer to Figure 3-30 and proceed as follows. Remove cam gears (7, 8, 9 and 10) and cam gear plates (11). (Cam gears are numbered on cam lobe from one to four, from the rear exhaust valve cam forward.) When cam gears are removed, note whether or not cam gears have thin steel spacing washers (12) on either end of cam gear shafts. If any of the cam gears mentioned have spacing washers, be sure the same ones are used on each shaft when reassembling if the same cam gears and case cover are used again.

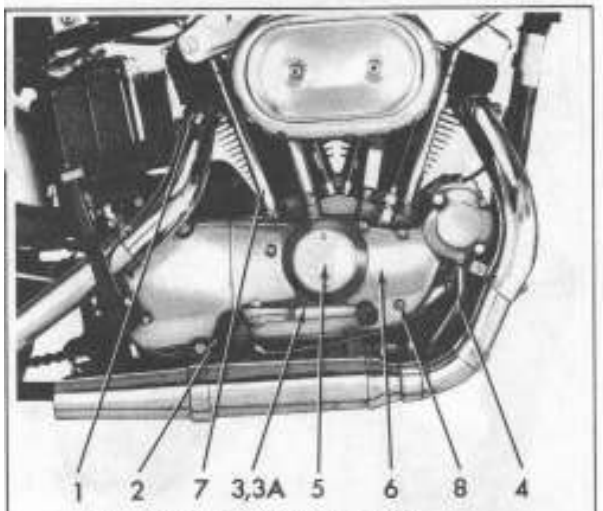

1. Exhaust pipe port clamp (2)
2. Footrest
3. Gear shift foot lever (1974 & earlier)
3A. Rear brake foot lever (1975 & later)
4. Breather pipe (1976 & earlier)
5. Circuit breaker
6. Gearcase cover
7. Push rod (4)
8. Gearcase cover screw (11)
9. Generator mounting screws (3)

Figure 3-33. Removing Gearcase Cover (1971 and Later)

Free idler gear (13) with fiber washer (14) by lifting generator up and away from crankcase. Discard gasket (15). On 1976 and earlier models pinion gear (16) is a press fit on pinion shaft splines, remove with Pinion Gear Puller, Part No. 96830-51. On 1977 and later models, pinion gear is a slip fit. Remove nut (30) and lockwasher (29) and remove pinion gear from pinion shaft. Oil pump drive gear (spiral gear) (17) is located on splined shaft behind pinion gear. Remove spiral gear which is a slip fit on splines.

CLEANING AND INSPECTING (Figure 3-30)

With cleaning solvent thoroughly scrub the gearcase cover and gears to remove any oil and carbon deposits. Blow out all gearcase cover oil passages and bushings with compressed air. Clean old gasket sealer from joint faces with cleaning solvent. Carefully examine timing gears for excessive wear by inserting gears in case cover. Check for looseness in bushings and for amount of lash between gears. If teeth are pitted, scored, cracked, chipped or if faces of teeth are worn, replace gears. Check the gear shafts for damage and pitted surfaces. Measure shafts and bushings with appropriate instruments to determine extent of wear. If any cams are found with rough or pitted surfaces, replace gear. The idler gear shaft (28) is a press fit in the gear and can be replaced, providing the gear is in good condition.

On 1976 and earlier models, check pinion gear (16) for press fit on pinion shaft. The slightest lash will usually result in noisy operation, often mistakenly attributed to the other timing gears.

Check cam gear needle roller bearings (18) and idler gear bushings (24) in right crankcase side and cam gear shaft and pinion gear shaft bushings (19, 20, 21, 22, 23 and 24) in gearcase cover for extent of wear. These bushings normally do not require replacement until an engine has run up extremely high mileage.

See "SPECIFICATIONS," for clearance of cam gear shafts in cover bushings, pinion gear shaft in cover bushing and cam gear shafts in crankcase needle roller bearings.

When bushings are worn to the extent of increasing clearance to .001 in. or more over specified limits, they should be replaced, as the cam gears are likely to become very noisy with excessive clearance in the bushings. Examine the face of each bronze bushing flange for wear. If bushing flanges are badly worn replace bushings.

Examine cam gear plates (11) for excessive wear or damage. Replace, if necessary.

Oil separator bushing (25) should have 1/16 in. ± 1/64 in. running clearance with generator oil slinger. If clearance is too great, insert a thin washer between face of gear and oil slinger washer.

On 1976 and earlier models, inspect the crankcase oil strainer (26) to make sure it is not plugged with any foreign material.

REPLACING BEARINGS

The four cam gear needle roller bearings in the crankcase are a press fit and can be removed and installed without disassembling crankcase by using Tool, Part No. 95760-69 as shown in Figure 3-39. Use Tool, Part No. 97273-60, for installing cam gear needle roller bearings, always press on printed side of bearings, being extremely careful not to tip or misalign bearing in the case during the installing operation.

If inspection warrants replacement of either the cam gear or pinion gear bronze bushings in the gearcase cover, it first is necessary to separate the right and left crankcase sides and remove the flywheel assembly. See "CRANKCASE."

To remove the six blind bushings from the gearcase cover and one blind bushing (idler gear) from the crankcase, use Puller, Part No. 95760-69 as shown in Figure 3-34.

Before pressing in new bushings, note location of original dowel pin holes for reference when drilling new holes. When drilling new holes, be sure to locate holes 1/8 in. or more from original dowel pin holes.

Use a smooth surfaced disc or plate slightly larger than flange when pressing bushing into position. Be sure bushing flanges are seated tight against gearcase cover and/or crankcase idler gear bushing.

After new bushings have been pressed in, they must be dowel pinned with cover bushing pins to prevent them from turning. Drill a hole with a number 31 drill, 9/32 in. deep, through bushing flange and into aluminum so when dowel pin is driven in and bottomed, its end will be slightly below face of bushing flange. Peen bushing around dowel pin hole to prevent pin from coming out.

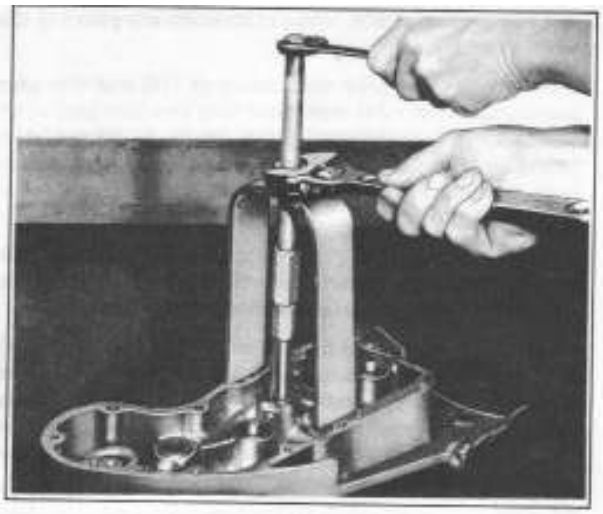

Figure 3-34. Removing Bushing from Gearcase Cover

After all bronze bushings have been pressed in and dowel pinned, all but the idler gear bushings must be line-reamed.

Parts order bushings are furnished nearly to size so there is little stock to be removed when reaming bushing. When removing reamer, keep turning it to the right as it is being pulled out.

To ream idler gear bushings, use special Reamer, Part No. 94806-57. Carefully align and turn reamer into bushing until it bottoms.

To line-ream the 1-1/8 in. dia. rear intake camshaft bushing in the gearcase cover, insert special Reamer, Part No. 94803-37 or use late style Reamer, Part No. 94803-67 and insert through crankcase needle roller bearing. Reamer will be a close fit in needle roller bearing, providing alignment for reaming the gearcase cover bushing.

See Figure 3-35. Install gearcase cover, at same time starting cover bushing reamer in cover bushing. Turn reamer into crankcase and gearcase cover bushings until it bottoms in gearcase cover.

To line-ream the front exhaust, front intake and rear exhaust cam gear shaft bushings in the gearcase cover, assemble the cover to crankcase side. With cover bushing reamer removed, insert special Reamer, Part No. 94803-37 or use a standard 11/16 dia. hand reamer through needle roller bearing, into cover bushing and turn until it bottoms in case cover.

To line-ream the pinion gear shaft bushing, install gearcase cover. Insert steel pilot bushing into crankcase bearing race to guide reamer. Insert special Reamer, Part No. 94812-37A, through pilot bushing into pinion gear shaft bushing, and turn reamer until it bottoms in gearcase cover. Remove gearcase cover.

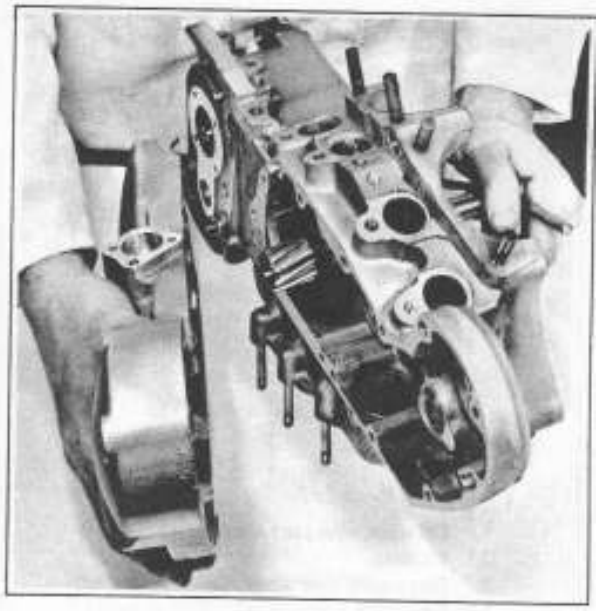

Figure 3-35. Installing Tool for Line-Reaming Rear Intake Cam Gear Shaft Cover Bushing

ASSEMBLING

1. Check end play of cam gears described below under "DETERMINING CORRECT CAM GEAR END PLAY."

2. For 1976 and earlier, retime the breather valve according to the instructionsunder "TIMING BREATHER VALVE."

3. Install the cam gears and assemble the gearcase cover in place. See "INSTALLING CAM GEARS AND GEARCASE COVER."

4. Install valve tappets and valve tappet guides (if they have been removed). See "VALVE TAPPETS AND VALVE TAPPET GUIDES."

5. Reassemble circuit breaker. See "CIRCUIT BREAKER," Section 5.

6. Install push rods and adjust tappets as described in "CYLINDER HEAD," and "REMOVING AND INSTALLING PUSH RODS," and "ADJUSTING TAPPETS."

7. Refer to Figure 3-32. Assemble breather pipe (4), gear shift foot lever (3), footrest (2), exhaust pipe port clamps (1) and muffler clamps.

DETERMINING CORRECT CAM GEAR END PLAY (Figure 3-30)

Before final reassembly of the cam gears, correct cam gear end play must be established. Temporarily position the two cam gear plates (11), less shims, in the gearcase compartment. Position against crankcase with beveled side of holes for cam shaft facing outward toward cams. Install cam gears. Assemble the case cover with a new dry gasket and securely tighten screws to 8-10 ft-lbs torque (less generator bolts).

Turn the engine over until the number one cam gear lobe is facing up as viewed through the tappet guide hole in the crankcase. Using a long shank screwdriver, pry the cam gear towards the case cover. With a feeler gauge, measure the clearance (end play) between the cam shaft shoulder and the gear plate. Repeat this operation for remainder of cam gears.

If end play exceeds the maximum specification, add necessary number of .005 to .007 in. thickness steel shims (12) to obtain recommended running clearance. If more than 1 shim is required, equally divide shims on both ends of shaft. After adding shims, turn engine over to be sure cam gears turn freely.

TIMING BREATHER VALVE (1976 AND EARLIER) (Figure 3-36)

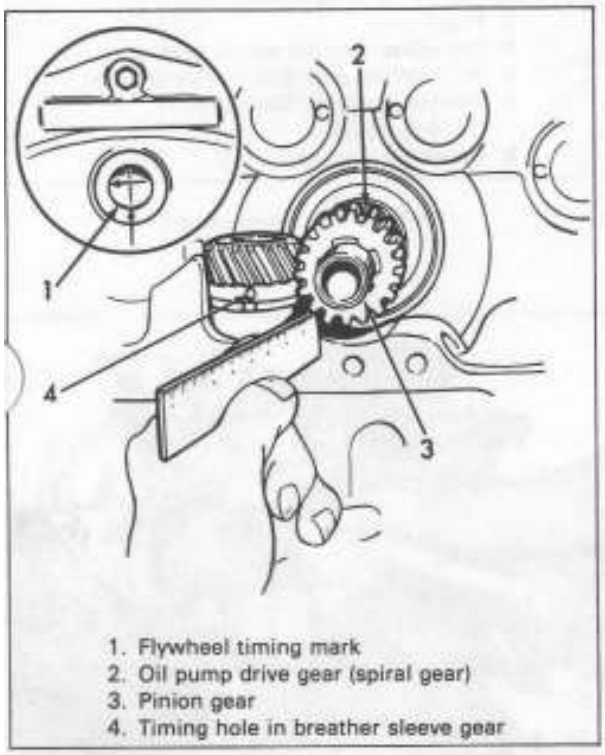

Figure 3-36. Timing Crankcase Breather (1976 and Earlier)

The breather must be retimed if disengaged from mating oil pump drive gear (spiral gear) on pinion shaft. To check breather timing proceed as follows:

Flywheel timing mark (1) should be exactly in center of timing inspection hole in left side of crankcase.

Oil pump drive gear (spiral gear) (2) is located on splined shaft behind pinion gear (3). Spiral gear is a slip fit on splines. A mark is cut on one side of spiral gear, which should face outward against pinion gear when assembled to shaft.

NOTE

Once breather valve is correctly timed, position of flywheel timing mark and breather valve timing mark, registered in slot of breather sleeve gear, can be disregarded when installing timing gears.

INSTALLING PINION GEAR (Figure 3-37)

On 1976 and earlier models, assemble spiral gear against shoulder on pinion shaft engaging breather sleeve gear tooth which will register timing hole in breather sleeve (4) in center of slot in breather bushing as shown. Install pinion gear using Gear Puller and Installer Tool as shown in Figure 3-37.

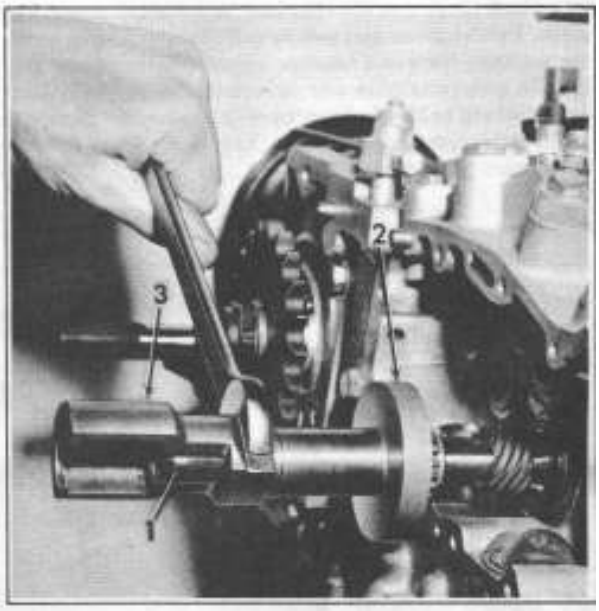

Figure 3-37. Installing Pinion Gear (1976 and Earlier)

Turn screw (1) on end of pinion shaft and tighten securely. Position gear locating collar (2) and body (3) on screw (1). Turn tool body to press gear into position until locating collar firmly contacts joint face of crankcase. This positions pinion gear outer face exactly 5/16 in. from gearcase joint face, the running position for the gear when case cover is in place.

On 1977 and later models, install pinion gear on shaft with timing marks aligned. Install lockwasher (29, Figure 3-30) and nut (30, Figure 3-30) and tighten to 50 ft-lbs torque.

INSTALLING CAM GEARS AND GEARCASE COVER (Figure 3-38)

Install plates (11, Figure 3-30) in case recess with beveled side of holes for cam shaft facing outward toward cam.

Lubricate cam gear shafts and position in crankcase with marks on gears 1, 2, 3, 4 and 5 in alignment as shown under Figure 3-38. Install idler gear (7) in crankcase with fiber washer (8) toward the cover side.

Position gearcase cover gasket on crankcase. Be sure to install a new factory-made gasket. Never use a homemade gasket as cover gasket has holes especially located for oil passages and if a hole is left out or put in wrong place, oiling system will not function normally.

Lubricate the cam gears with a liberal coating of engine oil. Carefully align cover and tap into position. Cover should slip into place easily and should never be forced or driven into place. Tighten all screws evenly to 8-10 ft-lbs torque, working opposite from one another. Install generator and gasket. Tilt generator back end down as it is inserted in gearcase opening to lift oil slinger over idler gear, and then up to mesh generator and idler gears. Turn engine over to make sure gears turn freely.

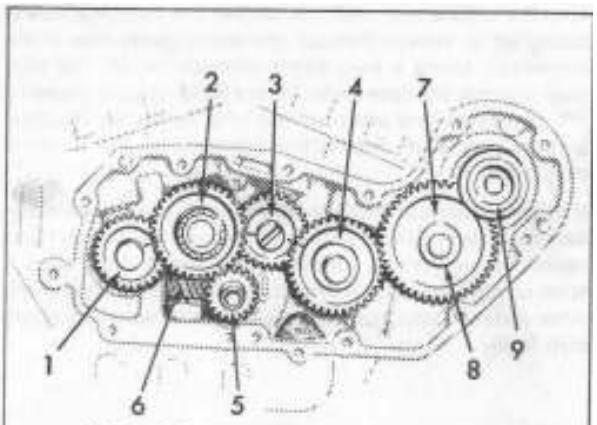

1. Rear exhaust cam gear
2. Rear intake cam gear
3. Front intake cam gear
4. Front exhaust cam gear
5. Pinion gear
6. Crankcase breather sleeve gear
7. Intermediate gear (has no timing mark)
8. Intermediate gear fiber washer (1976 & earlier)
9. Generator drive gear

Figure 3-38. Timing Gears

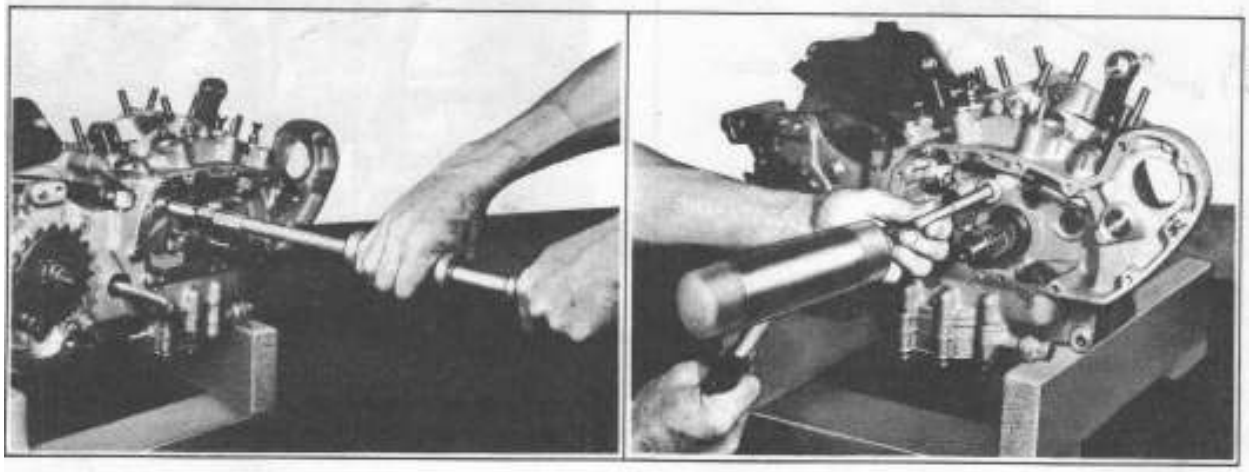

Figure 3-39 Removing and Installing Cam Gear Needle Bearings in Crankcase

GENERAL

When rod bearings, pinion shaft bearings, or sprocket shaft bearings are in need of repair, the engine must be removed from the chassis as described in "STRIPPING MOTORCYCLE FOR ENGINE REPAIR." It is recommended procedure to check over and make repairs to cylinder heads, cylinders, gearcase and transmission at the same time.

CHECKING FLYWHEEL END PLAY

Before completely disassembling the crankcases, it is recommended procedure to check flywheel end play to determine amount of sprocket shaft bearing wear.

To check flywheel end play, remove cylinder heads, cylinders, front chain cover, gearcase cover and cam gears. Do not remove or loosen engine sprocket assembly. (See "DISASSEMBLING CRANKCASE.")

Anchor dial indicator base firmly on right or left side of engine crankcase with indicator stem against end of pinion shaft or engine sprocket shaft nut. Rotate flywheels and at the same time, push and pull on pinion shaft reading travel of dial indicator in thousandths of an inch. If end play exceeds maximum specification limit as shown under "SPECIFICATIONS," sprocket shaft Timken bearing must be replaced. Also, see "CLEANING AND INSPECTION."

DISASSEMBLING CRANKCASE

To completely disassemble the crankcase, follow steps 1-13.

1. Remove cylinder heads as described in "CYLINDER HEAD."

2. Remove cylinders and pistons as described in "CYLINDER."

3. Remove clutch and clutch release as described in "CLUTCH," Section 4.

4. Remove the starter as described in "STARTER," Section 4.

5. Using Sprocket Shaft Extension Puller, Part No. 96015-56 for 1976 and earlier models and 96015-77 for 1977 and later models, remove sprocket shaft extension (1, Figure 3-42), as shown in Figure 3-40. For models equipped with a solid sprocket, use Claw Puller, Part No. 95635-46.

6. Remove tappets, tappet guides, circuit breaker or magneto, gearcase cover, cam gears and generator as described in "GEARCASE."

7. Remove the oil pump as described in "OIL PUMP."

8. See Figure 3-41. Free the tachometer drive unit from the right case and remove right crankcase bolts (1, 2, and 3) and stud nuts (4). Remove bolts (5), engine rear mount (6), bolts (7), and top center crankcase stud (8).

Check flywheel end play as described above.

Figure 3-40. Removing Sprocket Shaft Extension

9. Position crankcase on work bench, gearcase side up. Tap crankcase with rawhide mallet to loosen top half. Separate right case from left case side.

10. See Figure 3-42. Remove snap ring (2) from pinion shaft with tip of screwdriver. Lift bearing washer (3) with bearings (4) and retainer (5) off pinion shaft.

11. Remove transmission as described in "CRANKCASE AND TRANSMISSION DISASSEMBLY PROCEDURE," Section 4.

12. See Figure 3-42. Mount flywheel and left case assembly on arbor press table supporting crankcase on parallel bars. Press on end of sprocket shaft with arbor press until flywheel assembly (6) is free from case. Do not drift or tap flywheel assembly from left case as flywheels may be knocked out of alignment.

13. This step applies to 1976 and earlier models. See Figure 3-42. If it is necessary to disassemble flywheels or remove Timken bearing from crankcase, free right bearing half (7) from sprocket shaft, using Sprocket Shaft Bearing Puller, Part No. 96015-52 for 1976 and earlier models and 96015-77 for 1977 and 1978 models, as shown in Figure 3-43. Secure pinion shaft between copper jaws in vise. Place hooked ends of puller halves behind bearing, and slip round holding collar over outside diameter, down to bearing end. Engage puller screw handle in puller slots and pull bearing off by tightening puller screw against sprocket shaft center.

If left bearing half is to be removed, first pry oil seal (8) from crankcase. Use a pointed instrument such as an old spoke that has one end sharpened to a point. Remove crankcase outer spring ring (9) from groove in case, by prying end with screwdriver and inserting thin screwdriver or knife blade between spring ring and case.

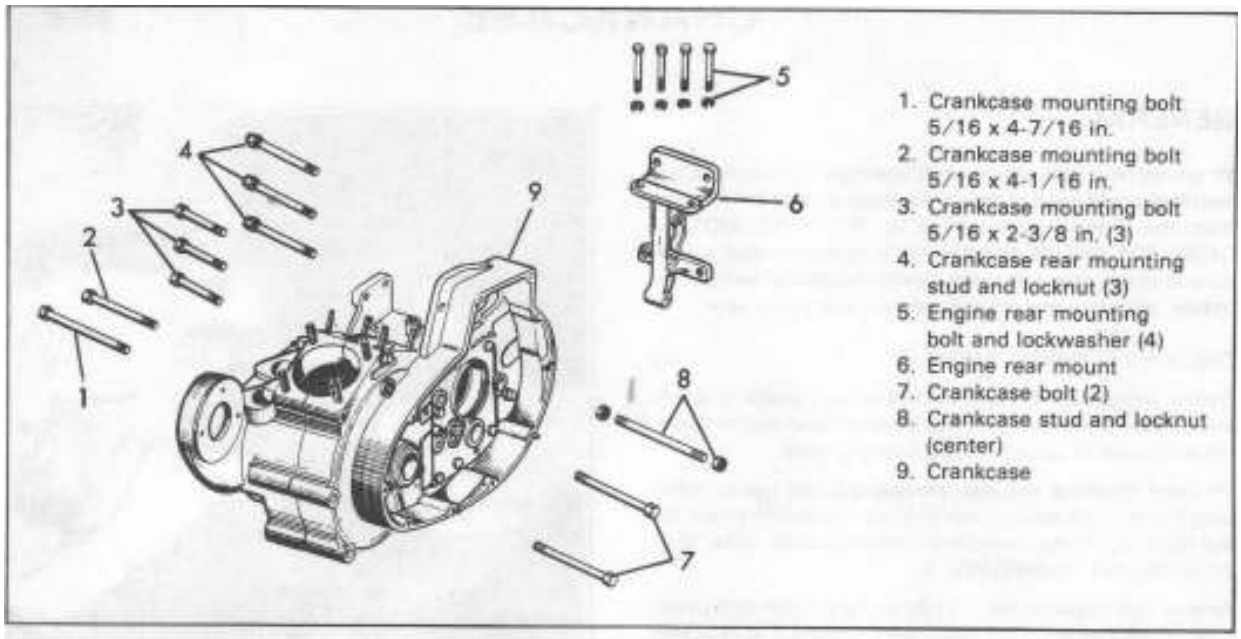

Figure 3-41. Crankcase - Exploded View

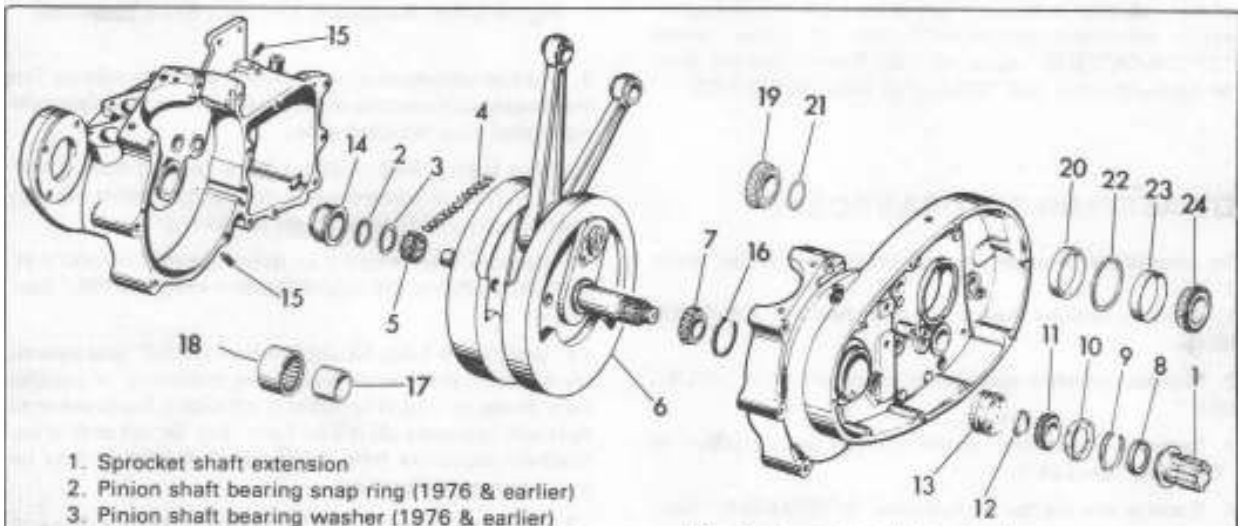

1. Sprocket shaft extension
2. Pinion shaft bearing snap ring (1976 & earlier)
3. Pinion shaft bearing washer (1976 & earlier)
4. Pinion shaft roller bearing (13) (1976 & earlier)
5. Pinion shaft roller bearing retainer (1976 & earlier)
6. Connecting rod and flywheel assembly
7. Sprocket shaft Timken bearing right half (1976 & earlier)
8. Sprocket shaft oil seal
9. Sprocket shaft bearing spring ring (outer) (1976 & earlier)
10. Sprocket shaft bearing spacer (1976 & earlier)
11. Sprocket shaft Timken bearing left half (1976 & earlier)
12. Sprocket shaft Timken bearing spacer (1976 & earlier)
13. Sprocket shaft Timken bearing outer race (1976 & earlier)
14. Pinion shaft bushing (1976 & earlier)
15. Pinion shaft bearing bushing screw (2)
16. Sprocket shaft bearing spring ring (inner) (1976 & earlier)
17. Pinion race (1977 & later)
18. Pinion bearing (1977 & later)
19. Sprocket right bearing (1977 & later)
20. Sprocket right outer race (1977 & later)
21. Spacer (1977 & later)
22. Lock ring (1977 & later)
23. Sprocket left outer race (1977 & later)
24. Sprocket left bearing (1977 & later)

Figure 3-42. Crankcase and Flywheel Assembly - Exploded View

Figure 3-43. Removing Bearing from Sprocket Shaft

Position left crankcase side on arbor press table, clutch side supported by parallel bars. Use right half of Timken bearing to press out sprocket shaft bearing spacer (10), bearing left half (11), spacer (12), and outer race (13).

13A. This step applies to 1977 and later models. See Figure 3-42. If it is necessary to remove either the pinion shaft (Harrington) bearing or sprocket shaft (Timken) bearing, proceed as follows:

Disassemble flywheel assembly and remove pinion and sprocket shafts. Remove pinion race (17) from pinion shaft and sprocket right bearing (19) from sprocket shaft using appropriately sized tubes to press them off using an arbor press.

Press out pinion bearing (18) from right crankcase half using a plug and press. Remove oil seal (8) from left crankcase half and remove sprocket shaft bearing (24). Remove both outer races (20) and (23) from left crankcase half by tapping them out from the opposite side. Pry out lock ring (22) from the groove in case.

FLYWHEELS

DISASSEMBLING (Figure 3-44)

Grip pinion shaft in copper vise jaws so shafts are in vertical position. Remove lock plate screw (1), lock plate (2), and crank pin nut (3), using crank pin and flywheel nut wrench, Part No. 96546-41. Strike left flywheel with soft metal mallet at about 90 degrees from crank pin hole on wheel periphery to loosen. Lift left flywheel (4) off crank pin.

Hold down bearing assembly with a short length of pipe or tubing so connecting rods (5) may be slipped off bearings. Remove bearings (6). Hold together in set until bearings are washed and refitted to crank pin.

Remove lock plate screw (7), lock plate (8), and gear shaft nut (9). Tap right flywheel (10) to loosen and lift off pinion shaft (11). Remove key (12) from shaft. Clamp crank pin in vise. Remove lock plate screw (13), lock plate (14), and crank pin nut (15). Tap flywheel to loosen and remove crank pin (16) and key (17).

Grip sprocket shaft in vise and remove lock plate screw (18), lock plate (19), and sprocket shaft lock nut (20). Tap flywheel to loosen and remove sprocket shaft (21). Remove key (22) from shaft.

CLEANING AND INSPECTING (Figure 3-44)

Wash all parts in solvent and blow out oil holes in pinion shaft, right flywheel and crank pin with compressed air. Examine crank pin for wear, grooving and pitting. If the surface is at all worn, replace with new pin. Examine flywheel washers (23 and 24). If either washer is worn and grooved, it should be replaced. A bad rod bearing is indicated when one washer is worn more than the other. Bearing should be replaced.

Examine connecting rod lower races. If they appear slightly grooved or shouldered where edge of bearing rollers ride, they may be lapped out and oversize bearing rollers installed. If they appear badly worn, grooved or pitted, new rods should be installed, preferably as an assembly with new bearings and crank pin. (See "LAPPING ROD BEARINGS.")

Examine pinion shaft and right crankcase bushing (see 14, Figure 3-42) for pitting, grooving, and gouging. A shaft that is worn must be replaced. If bushing is worn beyond repair, replace as described in "REPAIRING CRANKCASE."

Examine sprocket shaft bearing outer races for wear, grooving, pitting and powdered metal fragments. Examine bearing rollers for wear, pitting, grooving and scoring. The sprocket shaft Timken tapered roller bearings are manufactured in selectively fitted sets. If any part is unusable, the entire set must be replaced. See "CHECKING FLYWHEEL END PLAY."

REPLACING FLYWHEEL WASHERS (Figure 3-44)

Replace worn flywheel washers as follows:

Washer is a close fit in recess in flywheel and is secured originally by staking flywheel metal tight against the washer at several points. It is usually necessary to drill a small hole (1/8 in. or smaller) at the outer edge of the washer to permit getting a pointed tool underneath to pry it out. The hole is drilled only slightly deeper than the thickness of the washer to avoid removing more metal than necessary.

Before installing new washer, scrape outer edge of washer recess where metal was staked against it so new washer may seat fully against recess bottom. If washer does not seat fully, connecting rod will not have proper end play.

LAPPING CONNECTING ROD FACES (Figure 3-45)

Connecting rod lower races that are likely to clean up within the range of oversize bearing rollers and are otherwise in serviceable condition should be trued and sized with Connecting Rod Lapping Arbor, Part No. 96740-36.

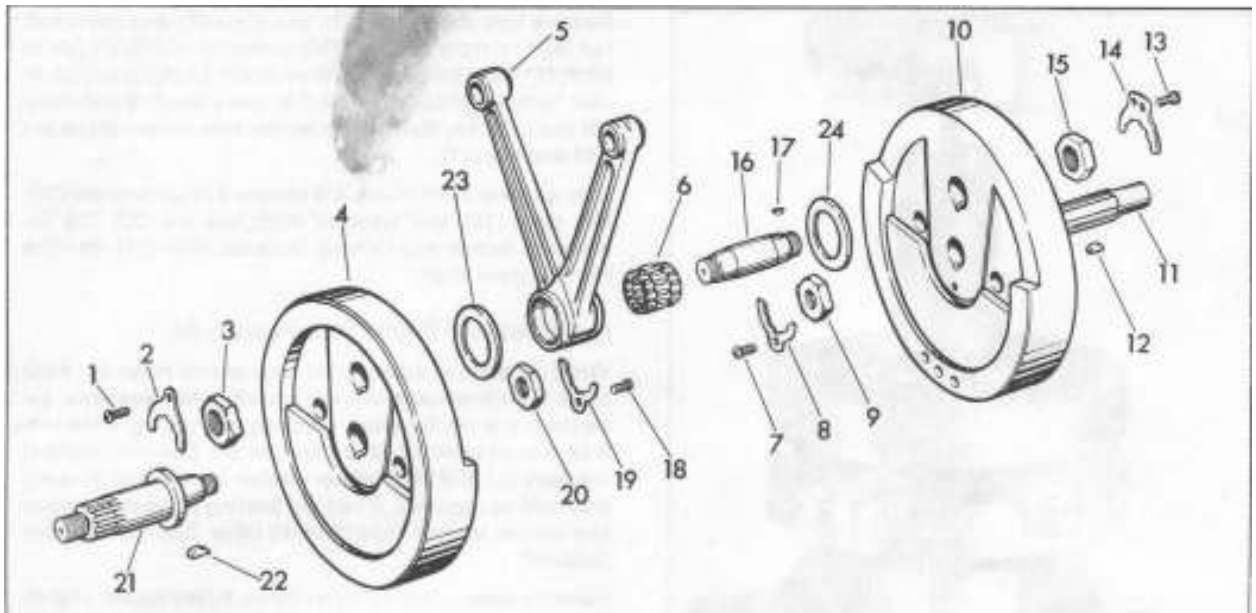

1. Crank pin lock plate screw
2. Crank pin nut lock plate
3. Crank pin nut
4. Flywheel (left)
5. Connecting rods
6. Crank pin roller and retainer set
7. Pinion shaft lock plate screw
8. Pinion shaft nut lock plate
9. Pinion shaft nut
10. Flywheel (right)
11. Pinion shaft
12. Pinion shaft key
13. Crank pin lock plate screw
14. Crank pin nut lock plate
15. Crank pin nut
16. Crank pin
17. Crank pin key
18. Sprocket shaft lock plate screw
19. Sprocket shaft nut lock plate
20. Sprocket shaft nut
21. Sprocket shaft
22. Sprocket shaft key
23. Crank pin boss washer (left)
24. Crank pin boss washer (right)

Figure 3-44. Flywheel and Connecting Rod Assembly - Exploded View

Turn lapping arbor in lathe at 150 to 200 rpm. Adjust lap by means of adjusting nut to a snug but free fit in rod race. Clean lap before using, then apply fine lapping compound (No. 220 grit grinding compound mixed with oil) to lap. A loose lap will "bell mouth" bearing race so it must be kept just snug at all times. To avoid grooving or tapering lapped surface in rod, work rod back and forth the full length of the lap holding rod as near race as possible. Lap rods individually.

When rods are lapped true and all traces of pit marks or grooving are cleaned up, wash rods and blow dry. Surface should have a soft velvety appearance and be free of shiny spots.

Assemble crank pin nut with Flywheel Nut Wrench or torque wrench to foot-pound reading given in engine "SPECIFICATIONS.".

FITTING ROD BEARINGS

Oversize rollers are available in .0002, .0004, .0006, .0008, .0010, .0015 and .0020 oversize.

There are two ways to determine oversize rollers to use. Each will result in properly fitted bearings if applied correctly.

1. Secure right flywheel in vise with pinion shaft down. Install any new set of oversize rollers to bearing races and position on crank pin. Slip rods over bearings. If they will not fit, it is obvious rollers are too large and a smaller size must be tried. If they fit and spin freely, install a larger set of rollers. Try various roller sizes until a slip fit is achieved. The rods will turn with a very slight drag. This is a plug fit. Determining running fit is merely a matter of subtracting one-half the desired running fit clearance (.0005 in.) from the roller size to find the running fit roller size.

It may be easier to gauge a plug fit as follows:

2. Fit any size rollers into races. Position bearings in rods. Support rods and bearings with left hand. Drop crank pin (not attached to flywheel) through crank pin hole. Plug fit has been achieved when crank pin will slide slowly through hole from its own weight. Running fit is then determined by subtracting one-half running clearance from oversize of rollers used to make plug fit.

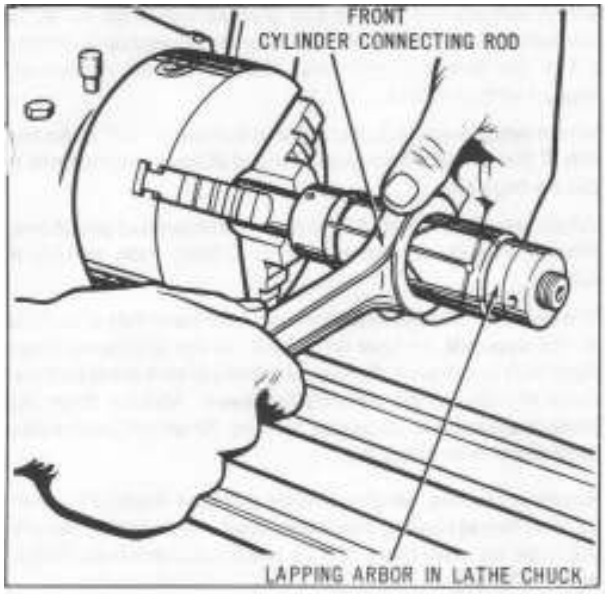

Figure 3-45. Lapping Connecting Rod Bearing Race

Example:

Plug fit is achieved with .0009 in. oversize rollers. By subtracting from this one-half the minimum clearance (.0005 in.), it is determined that a .0004 in. oversize roller set will ive desired running fit.

NOTE

Roller bearings are not available in odd numbered sizes; therefore, when determining a plug fit, if the bearings are too loose with an even numbered roller bearing (example - .0008 in. oversize) and too tight with the next size even numbered roller bearing (.001 in. oversize), it must be assumed that a theoretical odd size bearing (.0009 in. oversize) would achieve a plug fit. Use this theoretical size to compute running fit.

If the computed running fit requires an odd numbered roller bearing (example - .0003 in. oversize), use the next larger even size roller bearing (.0004 in. oversize).

If lower end race of one rod is found to be slightly larger than the other, select rollers to fit the larger rod race and lap smaller rod race to same size as larger race rather than fitting rollers of two sizes.

When rods are correctly fitted with required bearing clearance, extreme upper end of the male rod will have 3/64 in. side shake. All fitting and checking must be made with bearings, rods and crank pin free of oil and clean.

Fitting bearings tighter than described is likely to result in seizing and bearing damage when heat expands parts.

heck overall width of roller retainer assembly. It must be ess than width of female rod end.

ASSEMBLING FLYWHEELS (Figure 3-44)

After correct connecting rod bearing fit has been attained, clean and assemble parts as follows:

Wipe all tapers perfectly clean and free from oil. Install sprocket shaft (21) to left flywheel (4) and make sure key (22) is in position. See engine "SPECIFICATIONS" for proper torque. Assemble pinion shaft (11) and crank pin (16) to right flywheel making sure keys (12, 17) are in proper position. Install lock plates (8, 19). Tighten mounting screws (7, 18) to 20-24 in-lbs torque. If corners of nuts do not align with notches in lock plate, tighten (never loosen) shaft nuts to achieve alignment. Check to make sure oil passages through pinion shaft, right flywheel and crank pin are clear by blowing compressed air into hole near end of pinion shaft.

After correct connecting rod bearing fit has been attained, clean all parts and lubricate bearings with engine oil. Install connecting rods on crank pin bearing so female rod is to rear cylinder. Assemble key and sprocket shaft to left flywheel with sprocket shaft nut, lock plate and lock plate screw.

Position right flywheel assembly in vise. Wipe crank pin taper and crank pin hole in left flywheel clean and dry. Install left flywheel and tighten nut lightly. Hold steel straight edge along outer face of wheel rim at 90 degrees from crank pin (Figure 3-46). Tap outer rim of top wheel until rim faces of both wheels are in alignment. Tighten nut. Recheck with straight edge at frequent intervals. Use soft metal hammer to realign wheels. To prevent flywheel assembly from turning in vise while tightening nut, insert a rod 5 in. long and about 1/2 in. in diameter through holes in flywheels and between vise jaws so that rod bears against some part of the vise.

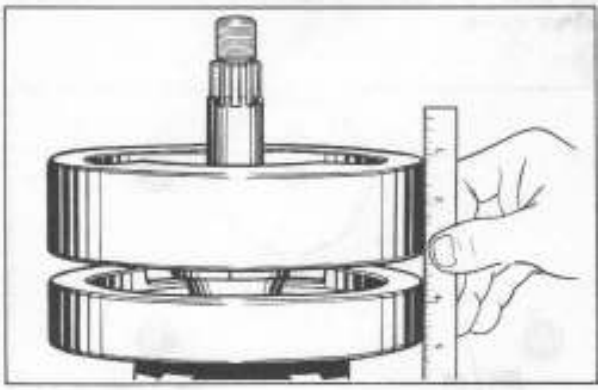

Figure 3-46. Squaring Flywheel Faces

When nut is fairly tight, install flywheel assembly in Flywheel Truing Device, Part No. 96650-30, as shown in Figure 3-47. Adjust so centers are just snug.

Wheels must turn freely but shafts may not be loose in centers. If flywheel assembly is either loose or squeezed, indicators will not indicate accurately. Adjust indicators to take reading as near to flywheels as possible, and so pointers read at about the middle of the scales.

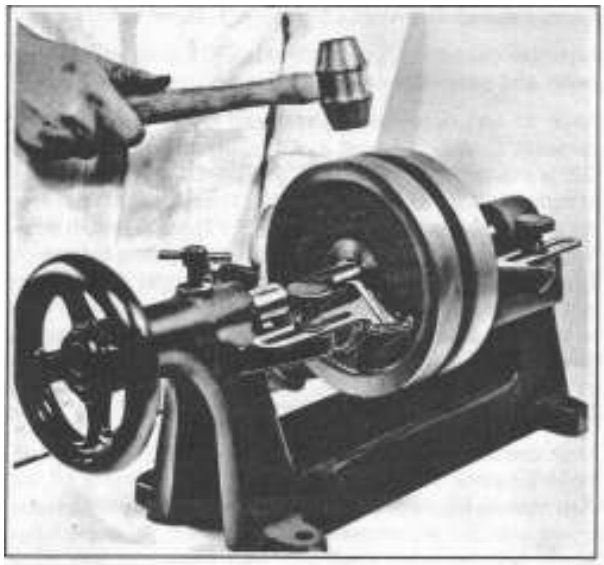

Figure 3-47. Truing Flywheel on Truing Stand

Turn flywheels slowly and observe the movement of indicator pointers. Movement toward flywheels indicate high points of shafts. Find highest point of each shaft and chalk-mark flywheel rims at those points. Loosen centers slightly, just enough so looseness may be detected, and make corrections as follows:

Flywheels may be out of true three ways, A, B and C, Figure 3-48 or a combination of two of the three ways.

When wheels are both out of true as indicated in "A," a C-clamp is tightened on rims of wheels opposite crank pin and the rim at the crank pin is moderately tapped with lead or copper mallet.

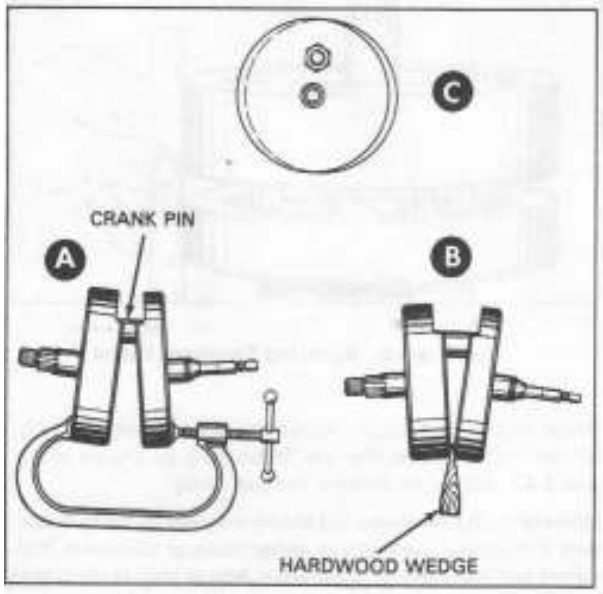

Figure 3-48. Correcting Flywheel Alignment

When wheels are both out of true as indicated in "B," a hardwood wedge is driven between the wheels opposite the crank pin and the rims near the crank pins moderately tapped with a mallet.

When wheels are out of true as indicated in "C," strike the rim of the wheel a firm blow at about 90 degrees from crank pin on high side.

When wheels are out of true in a combination of any of conditions shown, correct condition C first, then correct A and B.

The number of blows required and how hard they should be struck depends on how far shafts are out of true and how tight nuts are drawn. Remember that centers must be loosened slightly before striking flywheels. Making them too loose may result in damaged centers. Never strike wheels a hard blow near crank pin.

Readjust centers, revolve wheels and take reading from indicator. Repeat truing operation until indicators show run-out to be no more than .001 in. (each graduation on indicator is .002 in.).

If it is impossible to true wheels, look for a cracked flywheel, damaged or enlarged tapered hole, or a sprocket or pinion shaft worn out of round at surface where indicator reading is being taken.

When wheels are true, position in vise and draw crank pin nuts to 150 ft-lbs torque, using crank pin nut wrench or torque wrench. Check connecting rod sideplay with thickness gauge as shown in Figure 3-49. If it is greater than tolerance shown in engine "SPECIFICATIONS," draw up crank pin nuts until within tolerance. Insufficient play between rods and flywheel face is caused by one of following conditions:

1. Flywheels and crank pin assembled with oil on tapers and nuts over-tightened. Disassemble, clean, reassemble and recheck. It may be necessary to replace the flywheel.

2. New flywheel washers installed and not fully seated. Disassemble, inspect, and reset thrust washer. As last resort, grind down width of forked rod. Remove material evenly from both sides.

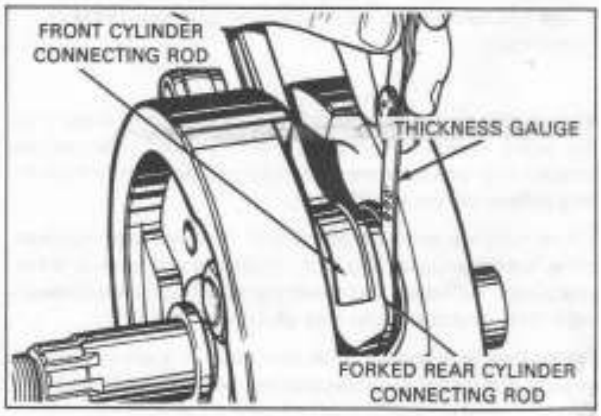

Figure 3-49. Checking Connecting Rod Sideplay

3. Taper holes enlarged as a result of having been taken apart several times. Replace wheel seating deepest.

4. Cracked flywheel at tapered hole. Replace flywheel.

If sides of forked rod are ground to get desired clearance, backs of bearing retainers must be ground down to remain narrower than width of female rod.

After rod sideplay is checked and adjusted, tighten crank pin nut to 150 ft-lbs torque and install lock plate and screw. Check wheel trueness on truing device. Correct any run-out as above.

TRUING AND SIZING PINION SHAFT BEARINGS RACE

Before fitting new pinion shaft bearings, lap bearing race in crankcase to true and remove traces of wear at sides of roller paths. A smooth velvety finish should result. A race that is worn beyond limits of oversize bearing rollers must be replaced. See engine "SPECIFICATIONS," for shaft fit in roller bearing.

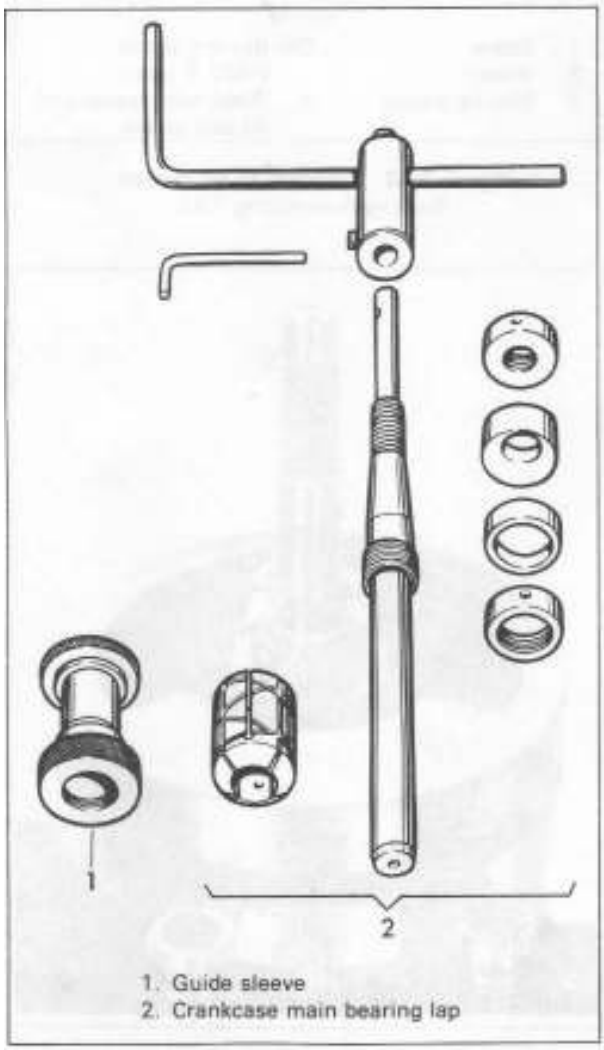

Figure 3-50. Main Bearing Lapping Tools

To remove worn bearing race, remove two bearing bushing screws (15, Figure 3-42) from inside of right case and press out bearing race. Heat cases to 275°-300°F. Heating expands case and makes it possible to remove bearing race using less force. Press worn race out and new race in. New race must be lapped slightly to true and align with left case bearing, and to attain a size compatible with roller sizes available.

Lap bearing race by inserting guide sleeve (1, Figure 3-50), Part No. 96728-56, from inside of case, through complete Timken bearing assembly on sprocket side of crankcase. Turn nut finger tight on sleeve. See "ASSEMBLING CRANKCASE," to install Timken bearing. This pilot will line up lapping arbor shaft through both bearing races so that an accurately lapped pinion shaft bearing race bore is obtained.

Temporarily assemble right and left cases with stud (8), bolts (3) and bolts (2, Figure 3-41). Securely tighten bolts to assure perfect alignment between left and right cases.

Insert crankcase main bearing lap (2, Figure 3-50) through pinion shaft bearing race and into guide sleeve in opposite race as shown in Figure 3-51.

Tighten arbor expansion collars using a length of 5/32 in. rod as spanner wrench until arbor begins to drag. Do not adjust arbor loose in bushing or bushing will "bell," a condition where hole is larger at ends than it is in the center.

Withdraw arbor far enough to coat lightly with fine lapping compound. Do not apply a heavy coat. Reposition lap in bushing and turn handle at moderate hand speed. Work lap back and forth in bushing as it is revolved to avoid grooving and tapering.

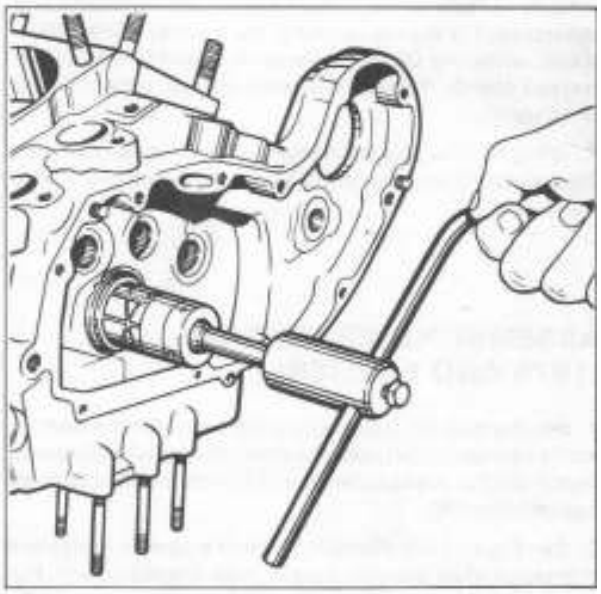

Figure 3-51. Lapping Pinion Shaft Bearing Race (1976 and Earlier)

At frequent intervals, remove lap from crankcase, wash and inspect bushing. Lapping is completed when entire bushing surface has a dull, satin finish rather than a glossy, smooth appearance. If necessary, flush off lap in cleaning solvent, air dry and apply fresh, light coat of fine lapping compound.

FITTING PINION SHAFT BEARING

The fitting of pinion shaft bearing is done in much the same way as fitting lower rod bearings (see "FITTING ROD BEARINGS"). A plug fit is first determined using proper instruments or, preferably, by trial and error using sets of various size rollers. Determine plug fit using pinion shaft that will be used on engine being overhauled, or spare shaft of exactly same size. When a plug fit has been found, pinion shaft will enter bearing slowly under its own weight, will turn with only a very light drag and will have no perceptible shake.

A running fit is determined from a plug fit by subtracting one-half the desired running fit clearance from the size of the plug fit rollers.

Example:

Running fit clearance is .0005 to .0015 in. loose. See engine "SPECIFICATIONS." If a plug fit was achieved with .0006 in. oversize rollers, subtract one-half running fit clearance from plug fit roller oversize. Use figure representing minimum of tolerance span, .0005 in. One-half the minimum tolerance allowed (.00025 in.) subtracted from roller oversize equals .0035, therefore, .0004 in. oversize rollers should be used to produce a suitable running fit.

Oversize rollers are available in .0002, .0004, .0006, .0008 and .0010 in. sizes. Roller selection should therefore be made to nearest available even-numbered size. In the example above, it would be possible to arbitrarily decide upon .0008 in. as a running fit rather than the .0005 in. if desired. Final decision would rest largely upon intended use of motorcycle. For high speed work, the more free fit would be better, while the closer tolerance is suited to road use at average speeds. This consideration may be made in fitting all tolerances.

All fitting must be done with bearings that are clean and dry. Oiled surfaces will take up some clearance and give a false reading.

ASSEMBLING CRANKCASE (1976 AND EARLIER)

1. See Figure 3-42. If spring ring (16) has been removed, install a new one in left case. Position left case on arbor press, clutch side up. Press outer race (13) in case until it bottoms against ring (16).

2. See Figure 3-53. Position flywheel assembly in vise and grip pinion shaft between copper jaws. Install screw (1, Figure 3-52) and with a 1 in. I.D. x 3-1/2 in. long steel tube under drive (2, Figure 3-52). Install Timken bearing half (7, Figure 3-42) on sprocket shaft. Be sure bearing bottoms on shaft shoulder.

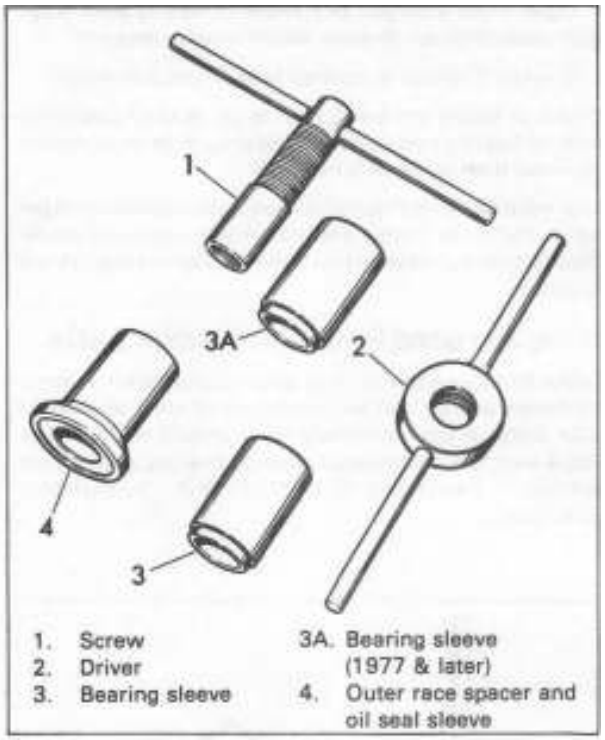

Figure 3-52. Sprocket Shaft Timken Bearing Assembling Tool

Figure 3-53. Installing Bearing (Right Half) and Spacer

If an arbor press is available, bearing may also be pressed on shaft with a 1 in. I.D. x 6 in. long steel tube. Be sure to use Flywheel Support Plate, Part No. 96137-52A, in between flywheel halves.

After pressing bearing tight against the flywheel, install bearing spacer (12, Figure 3-42) on sprocket shaft.

3. See Figure 3-54. With screw (1, Figure 3-52) installed on threaded end of sprocket shaft, place left crankcase (bearing race installed in case) over end of sprocket shaft, seating bearing race against Timken bearing half (7) and bearing spacer (12, Figure 3-42). Lubricate bearing with engine oil and insert Timken bearing left half (11, Figure 3-42) on screw (1, Figure 3-52) tapered end of bearing down.

NOTE

If Timken bearing left half (11, Figure 3-42) and outer spacer are already installed in case, simply position case over top of screw (1, Figure 3-52) until bearing is snug on sprocket shaft and proceed as follows.

Install bearing sleeve (3) over end of screw (1, Figure 3-52) with step-cut end of sleeve facing down as positioned on tool.

Start driver (2, Figure 3-52) on screw and turn driver down against bearing sleeve. Continue turning the driver clockwise until the two bearing halves are brought tight against spacer. Remove tools.

4. Insert screw (1) with driver (2) in small end of spacer sleeve (4, Figure 3-52). Position sprocket shaft bearing spacer (10, Figure 3-42) on flanged end of spacer sleeve (4) with notched side of spacer away from spacer sleeve (4). Position this assembly with spacer against crankcase outer bearing race as shown in Figure 3-55. Assemble screw and driver on sprocket shaft. Turn driver clockwise until spacer is tight against bearing outer race. Remove tools.

5. Install sprocket shaft oil seal (8), lip side of seal towards the spacer. Insert screw (1, Figure 3-52) through sleeve (4) and assemble on end of sprocket shaft. Install driver (2) and turn clockwise until seal is pressed into crankcase recess. Install sprocket shaft bearing spring ring (9). Align splines and start sprocket shaft extension (1, Figure 3-42) on end of sprocket shaft. Insert screw (1) through shaft extension and tighten on end of sprocket shaft. Turn driver (2) clockwise until extension bottoms against bearing inner race (see Figure 3-56).

6. See Figure 3-42. Install bearing assembly (4 and 5) and washer (3) on pinion shaft. Install new snap ring (2) in groove of pinion shaft.

Position right crankcase on arbor press and press pinion bearing (18) into case until it bottoms in recess. Install pinion race (17) onto pinion shaft using Bearing Guide Tool, Part No. 97080-77, as follows. Place assembled flywheel assembly on a press supported in the middle by Flywheel Support Plate, Part No. 96137-52A. Place pinion race (17) on outer end of pinion shaft and then press into place using Bearing Guide tool. When tool bottoms, pinion race (17) will be correctly positioned 0.31 inches from edge of shaft shoulder.

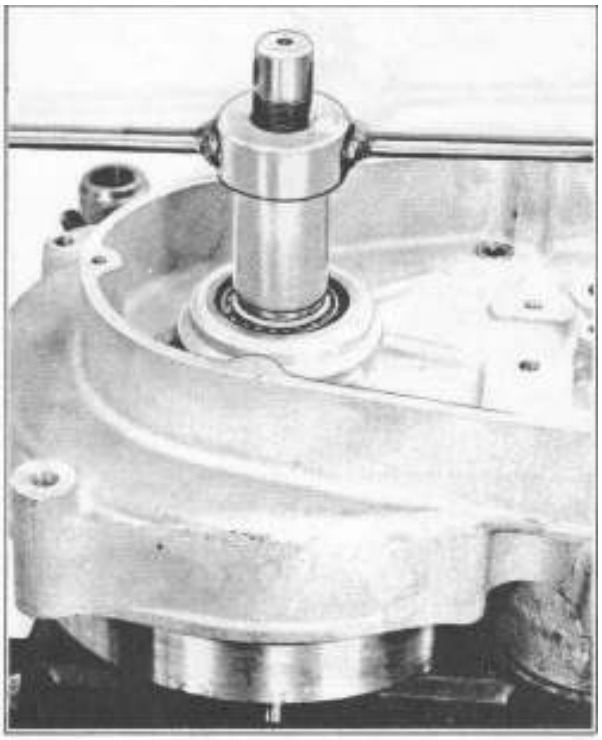

Figure 3-54. Assembling Left Crankcase to Flywheel Assembly

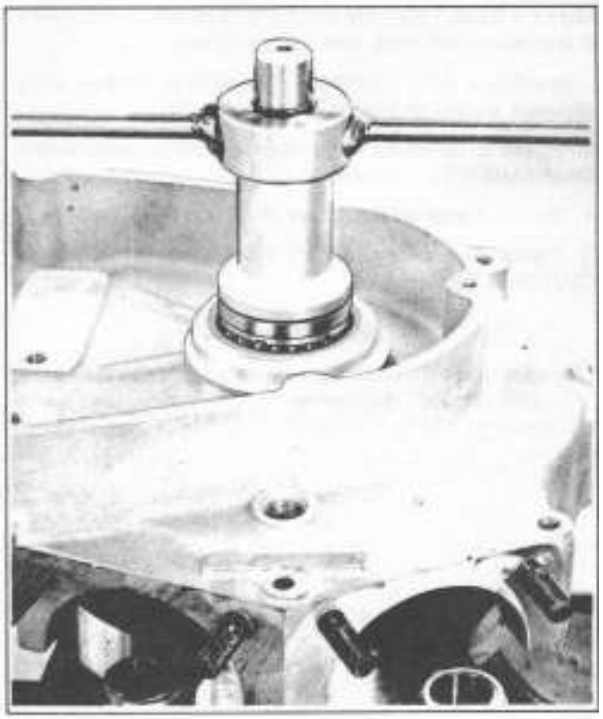

Figure 3-55. Installing Sprocket Shaft Spacer

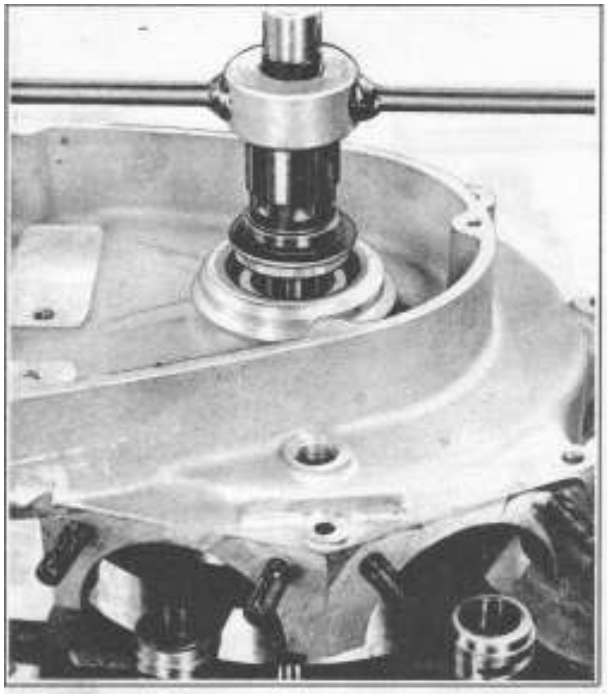

Figure 3-56. Installing Sprocket Shaft Extension

7. Reassemble transmission as described in "CRANKCASE AND TRANSMISSION ASSEMBLY PROCEDURE," Section 4.

8. Apply a coat of non-hardening gasket sealer to crankcase joint faces. Lubricate pinion shaft bearing with engine oil and assemble crankcase sides together.

9. See Figure 3-41. Remount crankcase in chassis using hardware shown in Figure.

10. Install transmission mainshaft sprocket as described in "TRANSMISSION," Section 4.

11. Install starter as described in "STARTER," Section 4.

12. Install clutch and clutch release as described in "CLUTCH," Section 4.

IMPORTANT

Be sure to refill transmission with oil as described in "LUBRICATION," Section 4.

13. Install oil pump as described in "OIL PUMP."

14. Install timing gears, gearcase cover, tappet guides, tappets, and generator as described in "GEARCASE."

15. Install cylinders and pistons as described in "CYLINDER."

16. Install circuit breaker and time engine as described in Section 5.

17. Install cylinder heads as described in "CYLINDER HEAD."

ASSEMBLING CRANKCASE (1977 AND LATER)

1. Referring to Figure 3-42 replace lock ring (22) in groove in left crankcase half and then press both outer races (20 and 23) back in place against ring.

Press new sprocket right bearing (19) on sprocket shaft so that it bottoms on shaft shoulder using Bearing Installing Tool, Part No. 97081-54A. Use Bearing Sleeve, Part No. 97100-77, under driver to press the bearing into place.

2. Referring to Figure 3-42, install pinion bearing (18) and pinion race (17) as follows.

Position right crankcase on arbor press and press pinion bearing (18) into case until it bottoms in press. Install pinion race (17) onto pinion shaft using Bearing Guide Tool, Part No. 97080-77, as follows. Place assembled flywheel assembly on a press supported in the middle by Flywheel Support Plate, Part No. 96137-52A. Place pinion race (17) on outer end of pinion shaft and then press into place using Bearing Guide Tool. When tool bottoms, pinion race (17) will be correctly positioned 0.31 inches from edge of shaft shoulder.

3. After reassembling the bearing components, reinstall flywheel assembly into left crankcase half as shown in Figure 3-54 using Bearing Installing Tool, Part No. 97081-54A.

4. Perform steps 7 through 17 under "ASSEMBLING CRANKCASES (1976 AND EARLIER)."

TILLOTSON CARBURETOR - 1970-71 MODELS

DESCRIPTION (See Figure 3-57)

The Model HD carburetor is a dual-venturi, diaphragm-type carburetor with an automatic economizer and accelerating pump.

The fuel inlet needle is operated through a compression-spring balanced lever that is controlled by the diaphragm to regulate the flow of fuel into the metering chamber. The amount of fuel going into the carburetor metering chamber is exactly equal to the amount of fuel being used by the engine.

This type of fuel supply control operates at any tilt angle and is resistant to any vibration which could cause a poor fuel-air mixture or flooding.

The small primary venturi is offset to the bottom of the large secondary venturi where the main nozzle outlet protrudes from the metering chamber. The accelerating pump discharges into the small venturi to take advantage of the venturi pressure drop that breaks up the solid stream of accelerating-pump fuel.

The accelerating unit is a positive-acting plunger type pump that is connected to the throttle shaft through a cam lever. The pump plunger is a spring-loaded leather cup that operates in a smooth plastic cylinder, and draws its fuel directly from the metering chamber to provide extra fuel for accelerating.

The automatic economizer is a hydraulically-operated enrichment valve that controls the main-nozzle fuel mixture at very low engine speeds. The valve opens an auxiliary fixed main jet as the venturi air flow decreases, allowing the fuel mixture to be maintained at a full-power richness. As the air flow through the carburetor increases, or as the engine speed increases, the valve closes to prevent an over-rich mixture at intermediate speeds.

OPERATION

Starting Operation (Figure 3-58)

Choke is in the closed position and the throttle in a slightly open position. As the engine is cranked, the entire metering system - idle, intermediate, and nozzle - is subjected to engine suction which is transmitted to the fuel chamber via the metering channels, creating a low pressure on the fuel

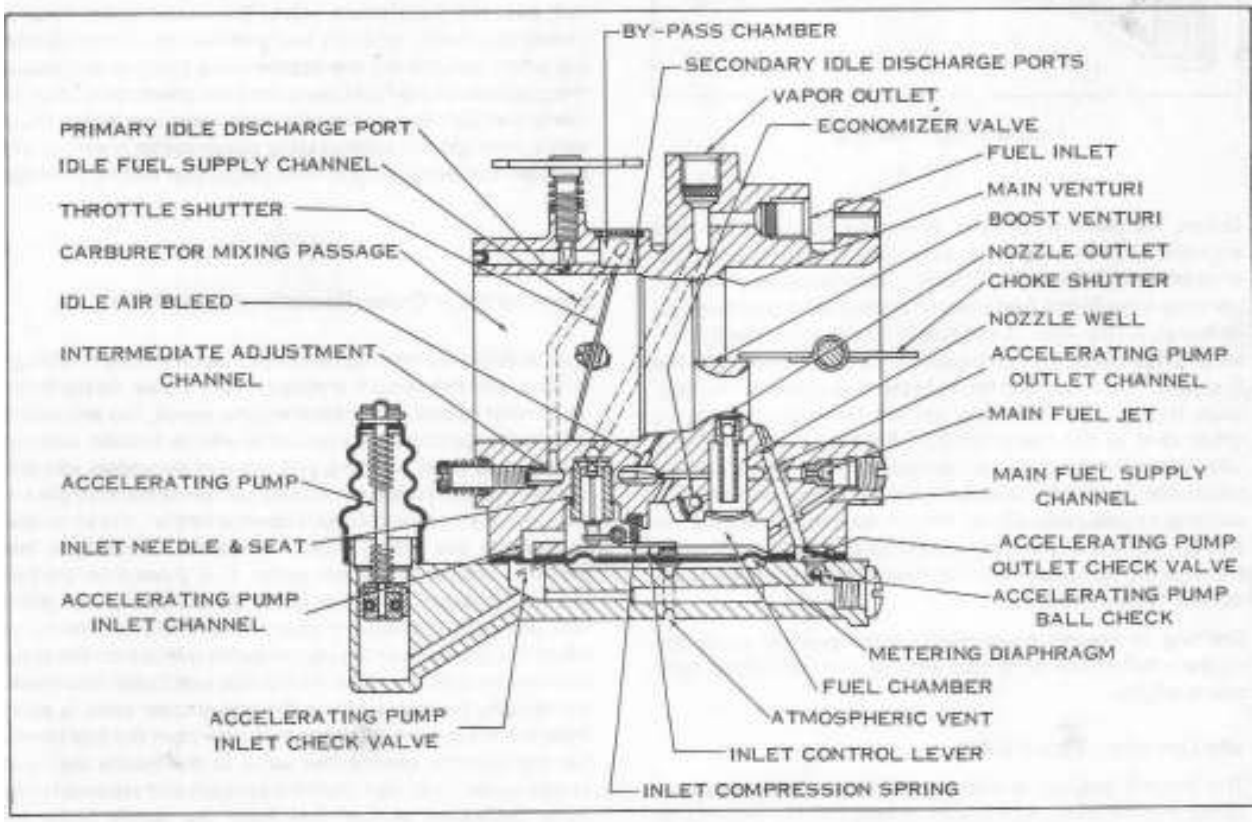

Figure 3-57. Carburetor Cross Section - Model HD - 1970-71 Models

side of the metering diaphragm. Atmospheric pressure from the atmospheric vent moves the metering diaphragm toward the inlet control lever to allow fuel to enter the carburetor through the inlet needle and seat. The fuel is then forced through the metering system, out into the carburetor mixing passage, and into the manifold and engine. When the engine fires and starts to run, the volume of air drawn through the carburetor increases, and the spring-loaded top half of the choke shutter opens to provide the additional air required by the engine, to prevent an over-rich mixture. The choke can then be moved to a half-open position for engine warm-up.

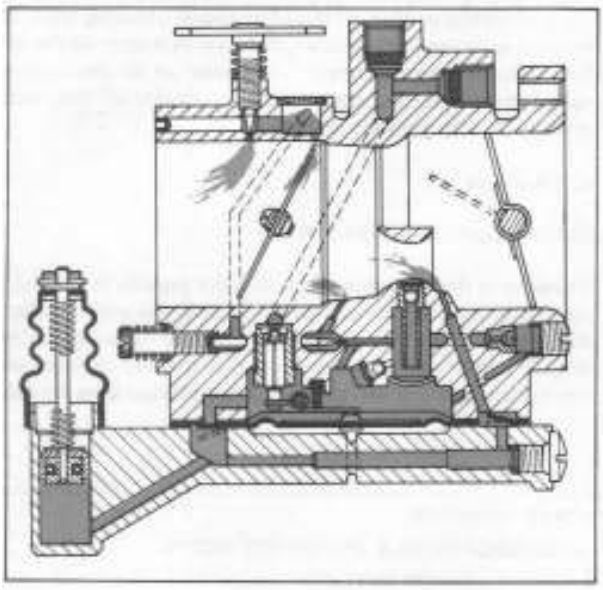

Figure 3-58. Starting

During hot weather, or after an engine has been run long enough to reach stable operating temperatures, and then shut off for a short period of time, a small amount of fuel vapor may form in the fuel lines or in the fuel chamber of the carburetor. The vapor in the fuel lines will enter the fuel inlet and rise out of the vapor outlet, to be vented back into the fuel tank. The vapor that forms in the fuel chamber must escape through the metering system because there is no other vent to the fuel chamber. Starting a warm engine where vapor may be in the system, is most easily accomplished by placing the choke in the half-closed position, and starting as described above. The choke helps to get the vapor quickly out of the fuel system so that the fuel flowing through the carburetor and fuel line can cool the system to a normal temperature.

Starting is always more easily accomplished using the choke – full choke for a cold engine, and half choke for a warm engine.

Idle Operation (Figure 3-59)

The throttle shutter is slightly open when the engine is idling and the carburetor mixing passage on the engine side of the throttle shutter is exposed to engine suction, while the mixing passage between the throttle shutter and the air cleaner is at nearly atmospheric pressure. The engine suction is transmitted through the primary idle discharge port to the fuel chamber side of the metering diaphragm via the bypass chamber, idle fuel supply channel, intermediate adjustment channel, nozzle well, main fuel jet, and main fuel supply channel, creating a sub-atmospheric pressure, in the fuel chamber. The metering diaphragm is forced upward by atmospheric pressure, moving the inlet control lever to overcome the inlet compression spring pressure, allowing fuel to enter the fuel chamber through the inlet needle and seat. The fuel flows through the main fuel supply, main fuel jet, nozzle well, intermediate adjustment channel (where it mixes with air from the idle air-bleed) idle fuel supply channel, to the bypass chamber, where it mixes with air from the secondary idle discharge ports, and on out into the carburetor mixing passage through the primary idle discharge port. The mixture of well-atomized fuel and air then travels through the manifold and into the engine combustion chamber.

Acceleration (Figure 3-60)

Acceleration is accomplished by the use of a positive-action accelerating pump that is actuated from the throttle shaft by a cam lever. The pump cylinder is filled when the pump is raised to the top of its stroke. Fuel is drawn from the fuel chamber, through the accelerating pump inlet channel, past the inlet check valve. The outlet check valve is closed to prevent air from being drawn into the accelerating pump system. As the accelerating pump is depressed, the pressure of the fuel closes the inlet check valve, the fuel flows through the pump channels, past the outlet check valve, through the accelerating pump outlet channel, and through the boost venturi into carburetor mixing passage.

Intermediate or Cruise Operation (Figure 3-61)

Fuel is delivered into the carburetor as described in idle operation, and the same fuel channels are in use. As the throttle shutter opens to increase engine speed, the secondary idle discharge ports are exposed to engine suction, and fuel is delivered from both the primary and secondary idle discharge ports to supply the additional fuel demand by the engine. As the throttle shutter is opened farther, the air velocity through the boost venturi increases, creating a low pressure area at the nozzle outlet. Fuel flows from the fuel channel through the nozzle outlet via the nozzle well, main fuel jet, main fuel supply channel, and economizer valve when the pressure at the nozzle outlet is less than the pressure in the fuel chamber. At the idle and lower intermediate speeds, the check ball in the economizer valve is away from the valve seat, allowing free flow from the fuel chamber through the economizer valve to the nozzle well and nozzle outlet. Fuel flow from the primary and secondary idle ports decreases as fuel flow from the nozzle outlet increases.

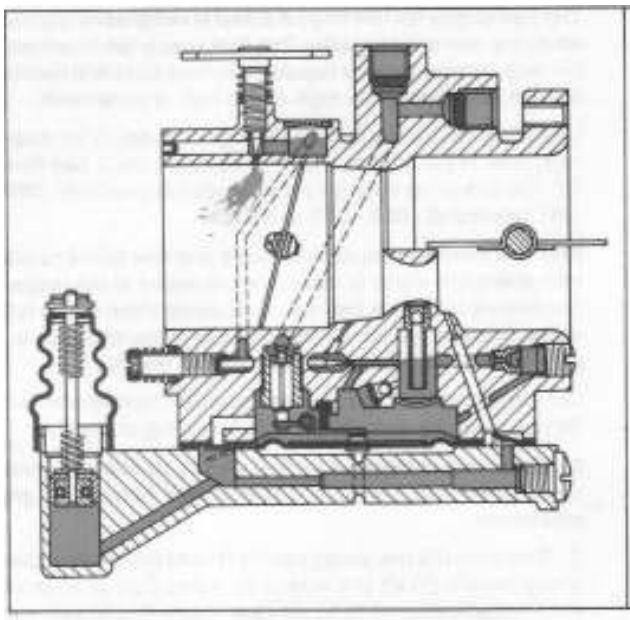

Figure 3-59. Idle

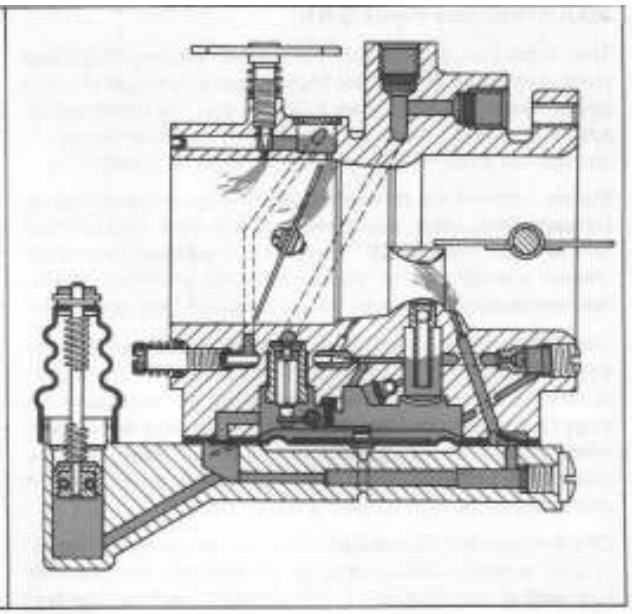

Figure 3-60. Accelerating

High-Speed Operation (Figure 3-62)

Fuel flow from the nozzle outlet increases as the shutter is opened past the intermediate position to the fully-open position. The fuel is delivered through the nozzle outlet from the fuel chamber via the main fuel supply channel and the main fuel jet. The increased pressure difference between the small venturi and the metering chamber, plus the force of fuel flowing through the economizer valve, causes the check ball to seat, stopping the flow of fuel from this part of the main metering system. This gives increased economy at high speeds. The diaphragm action and the method of fuel delivery to the fuel chamber is the same as previously described.

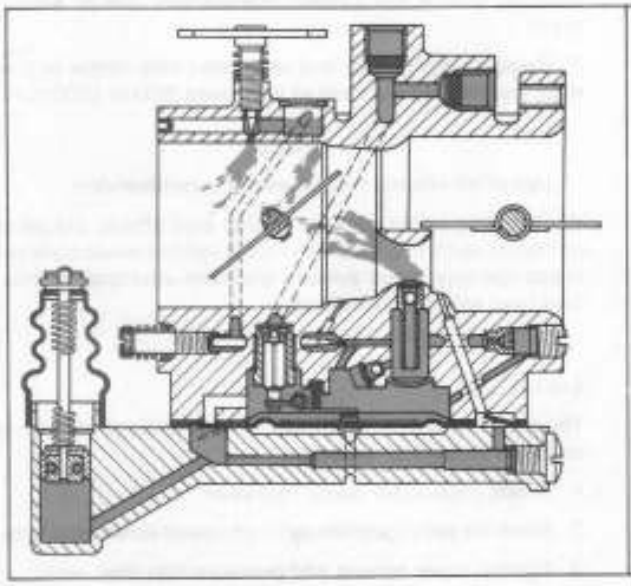

Figure 3-61. Intermediate Speed

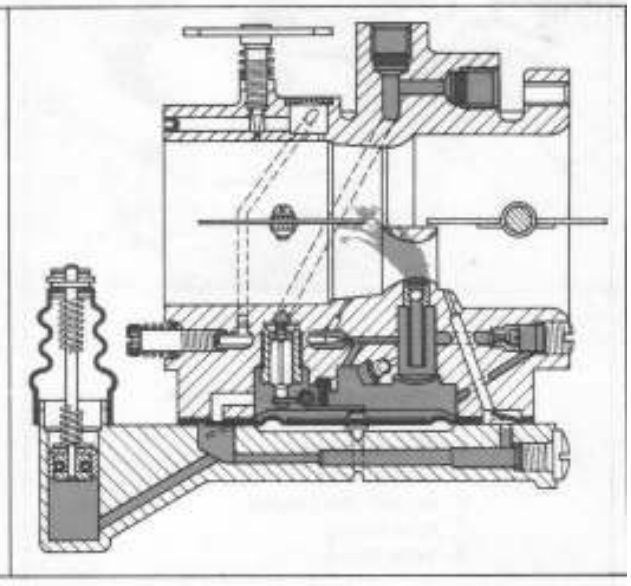

Figure 3-62. High Speed

ADJUSTING (See Figure 3-63)

The carburetor, once properly adjusted, requires little if any readjustment. It should not be necessary to adjust the low speed needle (1) more than 1/8 turn and the intermediate speed needle (2) more than 1/4 turn, richer or leaner, to correct the mixture for a change in weather conditions.

Before attempting to correct faulty engine performance through carburetor adjustment, check over "LOCATING OPERATING TROUBLES," Section 1. In addition be sure air cleaner element is not blocked with dirt and check manifold connections to be sure they are tight and not leaking air.

Inlet fitting (7) and vent fitting (8) have strainer screens located in threaded holes in carburetor body. If faulty carburetion indicates fuel flow is restricted, remove elbow fittings (7 and 8) from body, extract both screens with a bent wire, and blow out passages with an air hose. Replace screens and elbows, being sure that screens are not bent or damaged so as to allow dirt to pass through.

Check to see that carburetor vent line hose leading from fitting (8) to gas tank is not blocked off. Also see that gas tank cap vent is not plugged. Either condition will restrict fuel flow.

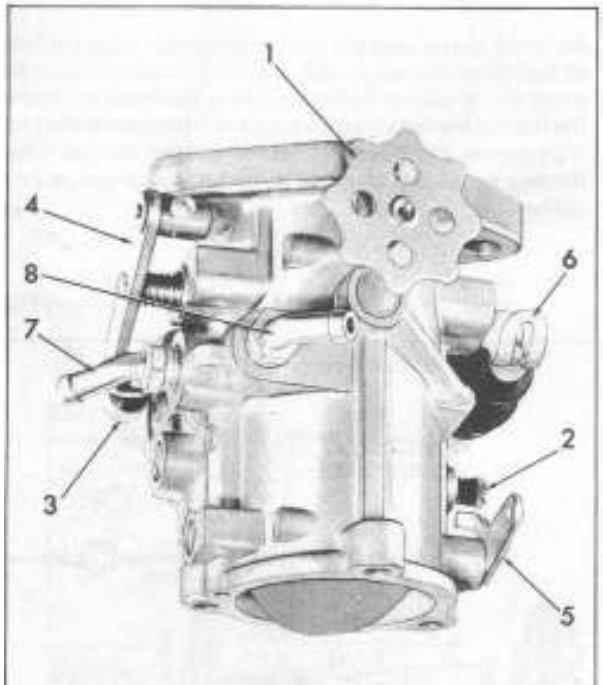

1. Low speed needle
2. Intermediate speed needle
3. Throttle stop screw
4. Throttle lever
5. Choke lever
6. Accelerating pump
7. Inlet fitting
8. Vent fitting

Figure 3-63. Model HD Carburetor Adjustments

The fuel supply for low engine speed is completely regulated by the low speed needle. The fuel supply for intermediate engine speed is also regulated by an adjustable needle. A fixed jet supplies the high speed fuel requirements.

Operating conditions, such as at high altitudes or hard service, may require other than the standard main fuel fixed jet. The following main jet orifice sizes are available: .055, .057 (standard), .059, .061 and .063.

Both the intermediate speed needle and low speed needle turn inward (to right) to make mixture leaner at the respective speeds for which they adjust. Backing them out (to left) makes mixture richer. Closed throttle idling speed of engine is adjusted with idle speed stop screw (3).

Correct adjustment can be determined in the shop and verified by road test according to the following procedure.

1. Make sure carburetor control wire is adjusted so throttle lever (4) fully closes and opens with handle-bar grip movement.

2. Turn both the low speed needle (1) and the intermediate speed needle (2) all the way in (to right). Do not close off either needle too tightly or damage to needle and seat may result.

3. Back up (to left) both needles about 7/8 turn. With needles in this position, engine will start, but low speed mixture will probably be too rich.

4. Start the engine and after it has reached operating temperature and the choke has been moved to the open position, adjust throttle control so engine runs at approximately 2000 rpm.

5. Without changing throttle setting, turn intermediate needle slowly in direction which produces highest engine speed (rpm). Engine should not miss or surge at this adjustment position.

6. Back off intermediate needle 1/8 turn to slightly richen mixture. This is the correct intermediate needle adjustment.

7. Readjust idle needle and idle speed stop screw to produce a smooth idle at desired idle speed (900 to 1100 rpm).

NOTE

Use of an electric tachometer is recommended.

8. Changing either mixture setting also affects the other setting to some degree. Therefore, it will be necessary to recheck the low speed mixture after the intermediate mixture final setting is obtained.

CHECK LIST

The following check list should be used to correct the most common carburetor defects.

1. Check accelerator pump operation.

2. Blow out passages through high speed screw plug hole.

3. Tighten cover screws and pressure-test inlet valve.

4. Check intermediate adjustment spring, needle, and needle seating.

5. Test main nozzle ball check valve with tool.

6. Inspect idle needle and seat.

7. Inspect choke relief disc.

8. Inspect and clean discharge ports, diaphragms and gaskets, screens and passages. Diaphragm plate must not turn.

9. Check inlet lever setting - must be flush to 1/64 inch above floor of casting. Lever and needle must be the shackled type.

10. Test economizer ball check valve with tool.

11. Check assembly order - gasket next to body, then diaphragm, last cover.

NOTE

A more detailed guide is given at the end of this section.

INSPECTING AND TESTING PRIOR TO REMOVAL OF CARBURETOR FROM ENGINE (Figure 3-64)

(Checks and tests for carburetor performance)

NOTE

All inspections and tests should be performed, in the sequence shown below, before further disassembly or repairs are made.

1. The accelerator pump should be inspected for proper operation first. Remove air cleaner, prime carburetor by inserting a toothpick through small hole in bottom of plastic pump cover and gently working diaphragm several times. Operate the throttle lever both rapidly and slowly several times, with the fuel valve turned on. The pump should deliver a strong and constant jet of fuel with each stroke. Failure to do so indicates diaphragm valves or pump plunger as being defective.

2. In cleaning of high, intermediate and low speed channels, the following procedure, most likely, will dislodge any loose dirt lodged in the passages.

Remove high speed screw plug located on rear side of carburetor, opposite intermediate adjustment needle. Lightly seat intermediate needle and apply air hose pressure (90 pounds maximum) to screw plug hole. Open intermediate and idle needles three or four turns and again apply 90 pounds maximum air pressure. Reset both adjustment screws (see "ADJUSTING CARBURETOR"). Evaluate carburetor's performance by road testing.

3. Check inlet needle and seat for leakage, as follows:

See that all plastic cover screws are tight. Remove fuel and vent lines, install Bulb Tester, Part No. 94750-68, to carburetor fuel inlet fitting, plug vent fitting with finger and pressurize tester noting any leakage. A moistened needle and seat should hold 1 to 1-1/2 pounds approximately, and release at approximately 3 to 5 pounds. A dry needle and seat will not hold as well as a moist one. See Figure 3-64.

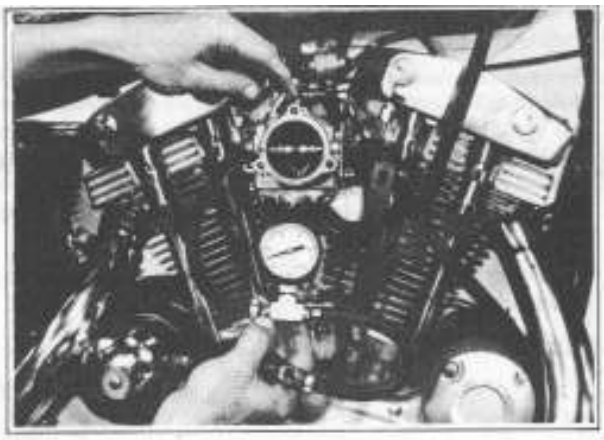

Figure 3-64. Checking Inlet Needle and Seat for Leakage

NOTE

Remove carburetor but do not disassemble.

4. Inspect intermediate adjustment needle and spring to see if spring coils are binding before needle seats. If needle does not seat grind a small amount of material from each end of spring. You can check to see if needle is seating by applying blue dye to needle taper and screwing down lightly into seat and noting mark on needle taper.

5. Check main nozzle ball check valve for leakage, as follows:

Seal one side of venturi with finger and apply alternate pressure and vacuum by mouth using grommet end of tool, Part No. 96960-68, seated in venturi as shown in Figure 3-65.

Vacuum should release ball, and pressure should seat ball in nozzle assembly.

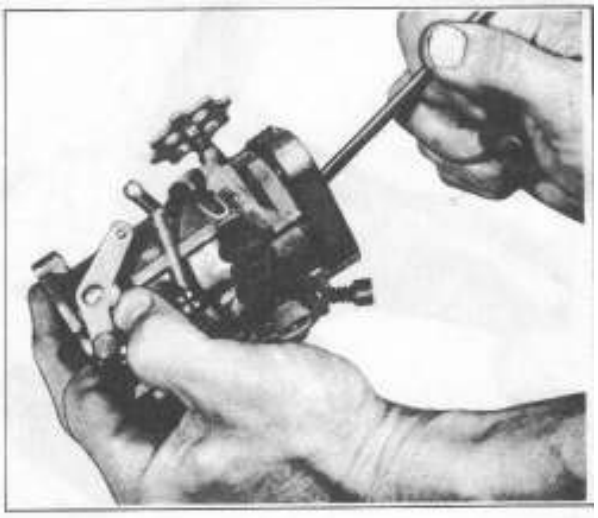

Figure 3-65. Checking Main Nozzle Ball Check Valve for Leakage

If leakage is evident, carburetor must be disassembled and main nozzle check valve assembly replaced.

To replace main nozzle, puncture welch plug with pointed tool, avoiding center, as shown in Figure 3-66. Remove nozzle welch plug and use stepped end of punch, Part No. 96962-68, on nozzle, tapping it through into venturi using plastic hammer. See Figure 3-67. Use larger end of tool to install the new check valve in the same manner. See Figure 3-68.

6. Inspect idle needle and seat in carburetor bore for any distortion or a cracked casting.

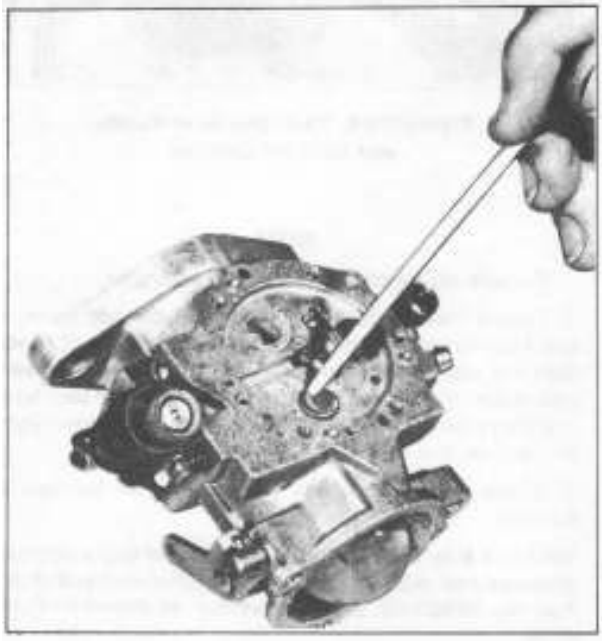

Figure 3-66. Removing Main Nozzle Welch Plug

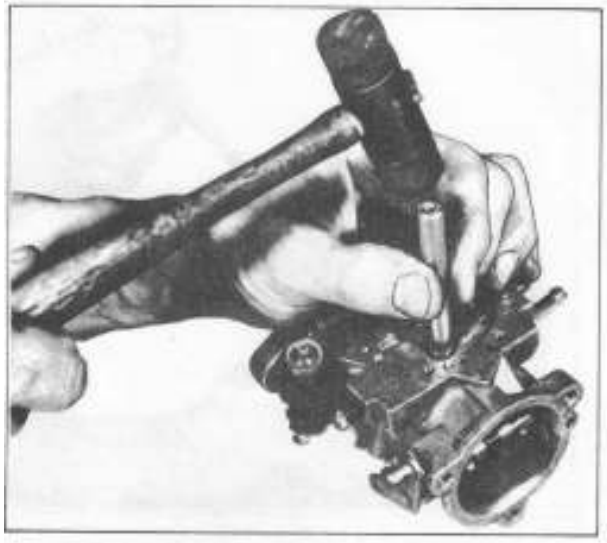

Figure 3-67. Removing Main Nozzle

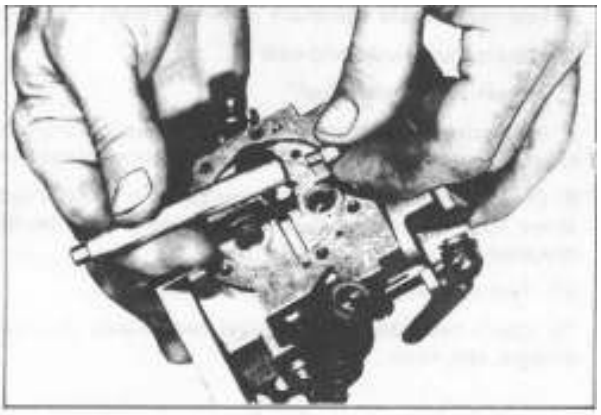

Figure 3-68. Installing Main Nozzle

7. Inspect choke relief disc (upper half of choke) for distortion or stress cracks at the area rotating on choke shaft.

NOTE

Replace damaged parts only after completing all tests.

8. Remove plastic diaphragm cover. Inspect accelerator pump leather for fold-over or coil spring out of correct position.

Check accelerator pump outlet ball check valve to see that ball is free.

Inspect gasket and diaphragm for distortion or misplacement on carburetor body. Diaphragm must not be stretched or have a rippled appearance particularly within the valley portion which should be uniform in shape. (Gaskets should be assembled next to body.)

Lightly make attempt to rotate metal diaphragm washer, riveted to upper side of diaphragm. If diaphragm plate rotates freely with no drag, replace diaphragm assembly. Diaphragm plate should not be loose.

Prior to removal of the inlet lever the initial needle seat leakage test should be performed 10 to 12 times with the bulb tester, as follows: Close bulb valve. Apply pressure to the inlet, sealing the vent fitting. Open bulb valve and again apply pressure. This repetition checks the sealing of the needle in the seat ensuring that it is not sticking open at lever pin or at groove in needle.

9. Inspect inlet needle lever for correct adjustment. It should be flush with surrounding floor of carburetor body. Tighten seat to 45 in-lbs torque. See Figures 3-69.

10. Test economizer ball check for leakage and correct operations as follows:

Using hose end of tool, Part No. 96960-68, place it over economizer welch plug hole so it seals off surrounding area. With alternate pressure and vacuum applied with mouth, as shown in Figure 3-70, ball check should release and seal. Replace any defective parts.

After plastic cover has been removed, remove welch plug at idle adjuster, all gaskets, diaphragms, needle and seat, and high speed nozzle before cleaning carburetor in a caustic

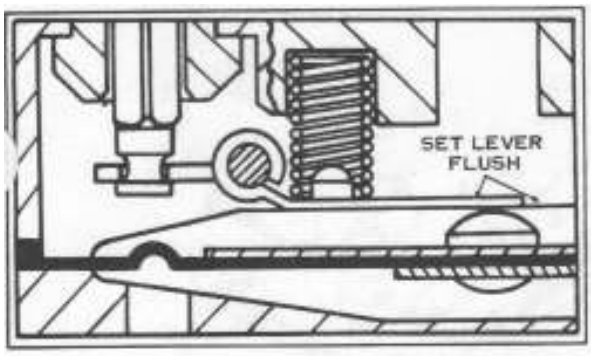

Figure 3-69

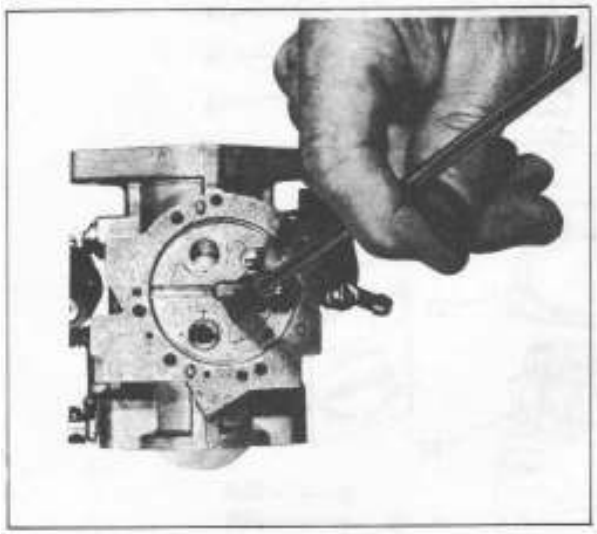

Figure 3-70. Checking Economizer Ball Check Valve for Leakage

carburetor cleaner, since the caustic cleaner will damage gasket material and the high speed nozzle plastic check ball. Only gaskets which are in perfect condition should be reused. The metal parts may also be cleaned in lacquer thinner with a small brush and blown dry.

Inspect by attempting to rotate, or move all welch plugs in body. A close inspection of wall area around welch plugs can disclose a leaking condition. Whenever a welch plug is removed, a new one should be reinstalled. If leakage is suspected due to rough or damaged welch plug seat in casting, apply a small amount of Harley-Davidson "Seal-All" to edge of welch plug after installing it in recess.

After carburetor has been reassembled, recheck accelerator pump per item 1 under TESTS.

DISASSEMBLING CARBURETOR
(See Figure 3-71)

Remove idle (24) and intermediate (35) fuel adjustments.

Remove two throttle shutter screws (48) and the throttle shutter (47). The sides of the shutter are tapered 15° to conform to the throttle bore. Observe the direction of this taper and the position of the shutter so that it can be reassembled later in the correct position.

Remove the accelerating-pump-lever retaining screw (3) and pull the throttle-shaft assembly (42) out of the carburetor body. Remove compression spring (46), washers (45), and shaft dust seals (44).

Remove six screws and washers (20) and the body cover (18).

Remove accelerating pump plunger assembly (1).

Remove channel plug screw (19).

Remove metering diaphragm (17).

Remove metering-diaphragm gasket (21). Note that the gasket is assembled next to the body casting.

Remove fulcrum-pin retaining screw (31), fulcrum pin (30), inlet control lever (29), and metering spring (34).

Remove the inlet needle (32).

Remove the inlet seat and cage assembly (32), using a 3/8 in. thin wall hex socket wrench. Note the position of the inlet seat insert with the contoured side toward the outside of the cage and the smooth side toward the inside of the cage.

Remove the inlet seat gasket (33), using a small tap or bent wire.

Remove plug screw (40).

Remove fixed main jet (39) and gasket (39A).

Remove main-nozzle welch plug (6) by drilling 1/8 in. diameter hole off center and just breaking through the welch plug. Do not drill deeper than the welch plug because this would probably damage the nozzle assembly. Pry out the welch plug with a small punch, being careful not to damage the casting counterbore edges around the plug.

Remove idle-port welch plug (6), using the same procedure described above.

Remove welch plug (8) and economizer check ball (22). Pry out the welch plug carefully, using a small punch.

Remove two choke-shutter screws (16) and the bottom half of the choke shutter (15).

Pull the choke-shaft assembly (13) out of the body. This will release the top half of the choke shutter (11), the spring (12), the choke friction ball (9), and friction ball spring (10).

Remove the choke-shaft dust seal (14).

CLEANING, INSPECTING AND REPAIRING

The carburetor body can be cleaned in commercial carburetor solvent such as Hydroseal to remove varnish from the channels and metering chamber.

NOTE

All gaskets, rubber gaskets, seals and plastic parts, including items 18, 22 and 41, should be removed and only metal parts cleaned in Gunk Hydroseal cleaning solution.

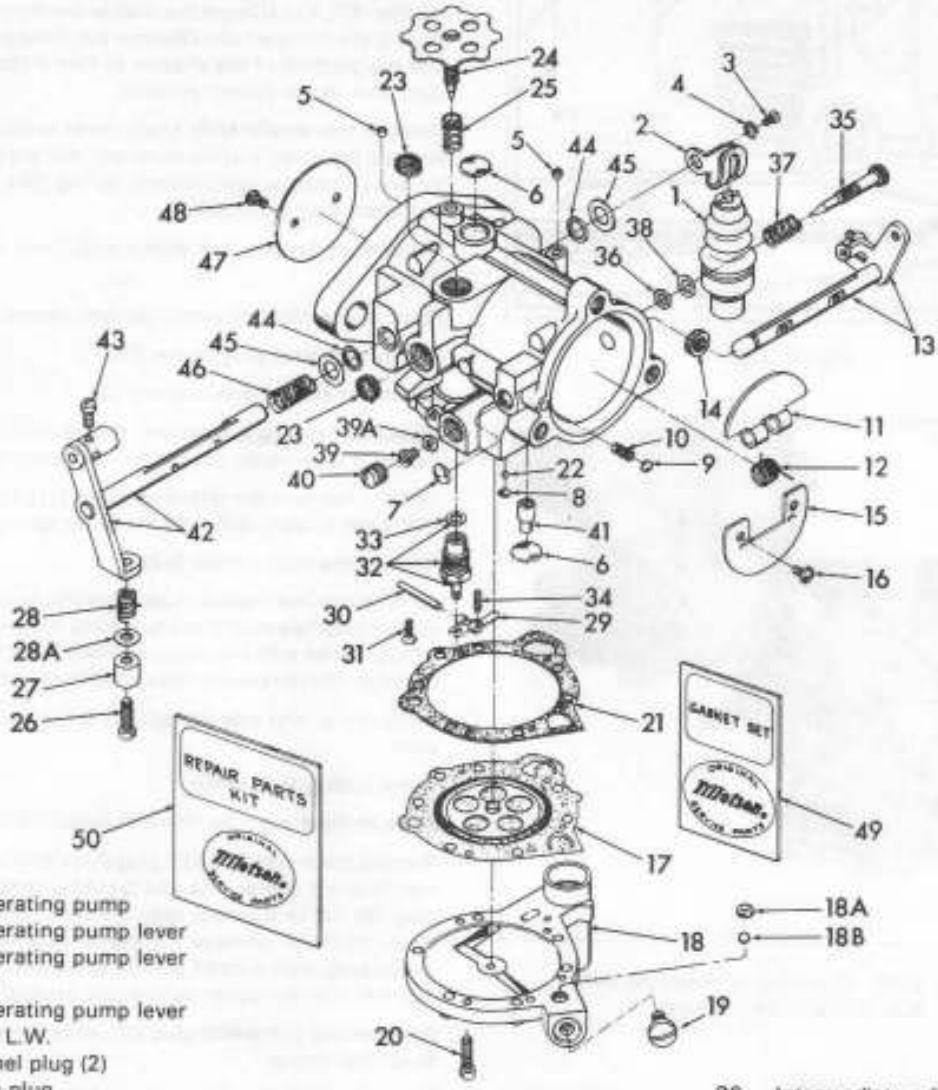

1. Accelerating pump
2. Accelerating pump lever
3. Accelerating pump lever screw
4. Accelerating pump lever screw L.W.
5. Channel plug (2)
6. Welch plug
7. Welch plug
8. Welch plug
9. Choke shaft friction ball
10. Choke shaft friction spring
11. Choke shutter (top)
12. Choke shutter spring
13. Choke shaft assembly
14. Choke shaft dust seal
15. Choke shutter (bottom)
16. Choke shutter screws
17. Diaphragm
18. Cover
18A. Accelerating pump check ball retainer
18B. Accelerating pump check ball
19. Diaphragm cover plug screw
20. Diaphragm cover screws (6)
21. Diaphragm cover gasket
22. Economizer check ball
23. Fuel filter screen (2)
24. Idle adjustment screw
25. Idle adjustment screw spring
26. Throttle stop screw
27. Throttle stop screw cup
28. Throttle stop screw spring
28A. Throttle stop screw spring washer
29. Inlet control lever
30. Inlet control lever pin
31. Inlet control lever screw
32. Inlet needle and seat
33. Inlet needle seat gasket
34. Inlet control lever tension spring
35. Intermediate adjusting screw
36. Intermediate adjusting screw packing
37. Intermediate adjusting screw spring
38. Intermediate adjusting screw washer
39. Main jet
39A. Main jet gasket
40. Main jet plug screw
41. Main nozzle check valve
42. Throttle shaft assembly
43. Throttle lever wire block screw
44. Dust seal (2)
45. Washer (2)
46. Throttle shaft spring
47. Throttle shutter
48. Throttle shutter screws
49. Gasket overhaul set
50. Overhaul repair kit

Figure 3-71. Model HD Carburetor - Exploded View - 1970-71 Models

All channels and orifices in the carburetor and pump-body castings should be cleaned with compressed air. DO NOT use wires or drills to clean small holes. These might cause burrs or change the size of the holes.

Inspect all parts for wear or damage paying particular attention to the following:

Examine pump body casting for breaks and cracks.

The inlet control lever must rotate freely on the fulcrum pin and forked end must engage slot in inlet needle (see Figure 3-71). The spring (34) should not be stretched or distorted.

Inspect the inlet needle (32) cone point for wear and scratches. Inspect the lever (29) contact end for burrs and wear.

ASSEMBLING CARBURETOR (See Figure 3-71)

Make certain that all parts are kept clean during reassembly. Do not use cloths to wipe or dry parts. Lint or threads can easily block small orifices. Welch plugs should be seated with a flat-end punch of a slightly smaller diameter than the welch plug. The seated plug should be flat, not concave, to assure a tight fit around the circumference.

The metering spring (34) should be seated into the counterbore in the body casting, and located on the protrusion on the inlet control lever (29). The lever should be adjusted flush with the floor of the metering chamber by bending diaphragm end of lever as necessary.

Two torque values are important: (1) the inlet seat assembly (32) should be tightened to 40-45 in-lbs; and (2) the accelerating-pump channel plug (19) should be tightened to 23-28 in-lbs.

TROUBLESHOOTING GUIDE (See Figure 3-71)

The following symptoms and possible causes with corrective service can be used as a guide in servicing the carburetor.

A. Idle System

1. Idle operation too lean.

   a. Dirt in idle fuel channels – blow out with compressed air.

   b. Intermediate adjustment (35) closed or adjusted too lean – readjust.

   c. Welch plug (6) or channel plugs (5) missing or not tightly sealed – reseat or replace plugs.

   d. Nozzle check valve (41) not sealing – blow out with compressed air, or replace. (See "CHECK LIST" No. 5.)

2. Idle operation too rich.

   a. Carburetor flooding – see item E.

   b. Idle adjustment screw (24) point damaged – replace the adjustment.

   c. Idle adjustment hole damaged, forced oversize, or casting cracked in the idle port area – replace carburetor.

B. Intermediate System

1. Lean operation at steady speeds between 15 and 65 mph.

   a. Intermediate adjustment (35) adjusted too lean – readjust.

   b. Dirt in intermediate fuel ports or supply channels – remove welch plug (6) and channel plugs (5) and blow out with compressed air.

   c. Welch plug (6) or channel plugs (5) not tightly sealed – reseat or replace plugs.

   d. Nozzle check valve (41) not sealing – blow out with compressed air, or replace. (See "CHECK LIST" No. 5.)

   e. Intermediate adjustment packing (36) missing or damaged – replace.

   f. Economizer check ball (22) stuck closed – remove welch plug (8) and check ball (22) and blow out channel with compressed air. (See "CHECK LIST" No. 10.)

2. Rich operation at steady speeds between 15 and 65 mph.

   a. Intermediate adjustment (35) adjusted too rich – readjust.

   b. Fixed main jet (39) too large, not tightly in place or missing – seat firmly, or replace jet.

   c. Carburetor flooding – see item E.

   d. Nozzle check-valve welch plug (6) not tightly sealed – reseat or replace.

   e. Choke valve partially closed – see that choke friction spring (10) and choke friction ball (9) are correctly assembled.

C. Nozzle System

1. Lean operation at speeds above 60 mph.

   a. Dirt in nozzle system – remove main fuel jet plug screw (40) and blow channels out with compressed air.

   b. Main fuel jet (39) too small or damaged – replace.

   c. Main fuel jet plug screw (40) not tightly sealed – tighten to stop air leak.

   d. Nozzle check valve (41) damaged – replace. (See "CHECK LIST" No. 5.)

   e. Nozzle check valve (41) not seated correctly in casting – reseat flush with nozzle-well surface.

2. Rich operation at speeds above 60 mph.

   a. Main jet (39) too large, not tightly in place or missing – seat firmly or replace.

   b. Carburetor flooding – see item E.

   c. Economizer check ball (22) not seating – remove welch plug (8) and check ball (22) and blow channel out with compressed air. (See "CHECK LIST" No. 10.)

D. Accelerating Pump System

1. Lean acceleration.

a. Incorrect carburetion adjustment – readjust idle (24) and intermediate adjustments (35).

b. Dirt in acceleration fuel channels – blow out all channels in diaphragm cover (18) and the accelerating pump discharge channel in the body casting. (See "CHECK LIST" No. 1.)

c. Accelerator pump assembly (1) damaged or worn – replace assembly. (See "CHECK LIST" No. 1.)

d. Diaphragm cover plug screw (19) loose or missing – tighten or replace.

e. Diaphragm (17) flap check valves damaged or worn – replace diaphragm.

f. Economizer check ball (22) stuck closed – remove welch plug (8) and check ball (22) and blow channel clean with compressed air. (See "CHECK LIST" No. 10.)

E. Carburetor Flooding

1. Dirt in inlet needle and seat assembly (32) – remove and clean, or replace. (See "CHECK LIST" No. 3.)

2. Inlet seat gasket (33) missing or damaged – replace.

3. Inlet control lever (29) not correctly adjusted – readjust lever flush with metering chamber wall. (See "CHECK LIST" No. 9.)

4. Diaphragm (17) incorrectly installed – replace or correct installation.

5. Inlet control lever pin (30) loose or not correctly installed – tighten retaining screw (31) and correct installation.

6. Inlet control lever (29) tight on lever pin (30) – replace damaged part, or clean dirt from these parts.

7. Inlet needle or seat (32) damaged or worn – replace the assembly.

F. General Operation

1. Lean operation in all speed ranges.

a. Filter screens (23) plugged or dirty – clean or replace.

b. Inlet control lever (29) incorrectly adjusted – readjust lever flush with wall of metering chamber. (See "CHECK LIST" No. 9.)

c. Diaphragm cover plate (18) loose – tighten six screws (20).

d. Air leak in metering system – all channel plugs, plug screws, and lead plugs to be tightly sealed.

e. Inlet tension spring (34) stretched or damaged – replace.

2. Rich operation in all speed ranges.

a. Carburetor flooding – see item E.

b. Choke valve not staying fully open – see that choke friction spring (10) and friction ball (9) are assembled correctly.

c. Inlet control lever (29) incorrectly adjusted – readjust lever flush with wall of metering chamber. (See "CHECK LIST" No. 9.)

BENDIX CARBURETOR – 1972 TO EARLY 1976 MODELS

DESCRIPTION

The Model 16P12 carburetor is a horizontal plain tube type with a fuel bowl, a single ring-shaped float, an accelerating pump, idle mixture adjusting needle and a throttle stop screw for idle speed adjustment.

The throttle body casting contains an integral venturi and a fuel valve seat that is pressed into the body. The underside of the throttle body contains a long boss. The main jet and discharge tube assembly screws into the boss with the end of the tube projecting up into the venturi.

OPERATION

Fuel Supply System, Figure 3-72

Fuel under pressure enters the float chamber through the fuel inlet and fuel valve (needle and seat). The fuel level in the bowl is automatically maintained by the float which opens and closes the needle valve to supply the varying fuel flow demands of the engine as shown. A clip attached to the end of the needle valve engages a tab of the float assembly.

Accelerating System, Figure 3-72

The accelerating pump controls the amount of additional fuel that is discharged into the air system upon sudden throttle opening.

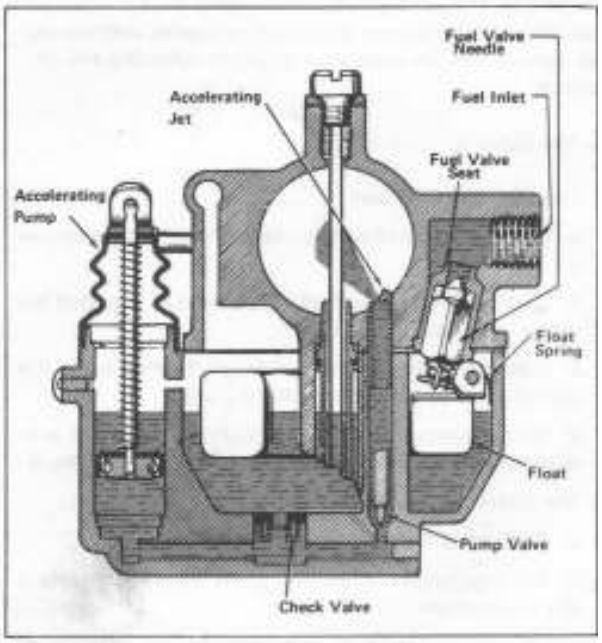

Figure 3-72. Fuel Supply and Accelerating Systems

The accelerating system consists of a pump assembly, accelerating jet, a check valve and the mechanical linkage that connects to the throttle shaft.

The accelerating pump has three adjustment holes in pump shaft to provide variable acceleration mixture.

Idle System, Figure 3-73

The fuel for idle is drawn from the main metering well through the idle tube and is mixed in the channel leading to the idle discharge holes with air entering through the idle air bleed. At slow idle speed, the throttle plate is positioned as shown in Figure 3-73 to expose only the No. 1 idle discharge hole to engine vacuum. Air is admitted to the idle channel through the No. 2, No. 3 and No. 4 (late 1972 and later) idle holes. The air mixes with the fuel-air mixture in the channel and is discharged through the No. 1 idle hole.

As the throttle plate is opened, the No. 2 idle hole and the No. 3 hole and finally the No. 4 hole begin to discharge fuel-air mixture to supply the increased fuel required at the higher engine speed.

The idle adjusting needle regulates the fuel-air mixture flowing through the No. 1 idle discharge hole. Turning the needle IN (clockwise) results in a leaner mixture. Turning it OUT (counterclockwise) provices a richer mixture. The idle speed is set by adjusting the throttle stop screw – not the idle adjusting needle.

Choke System, Figure 3-73

Before cranking the engine, the throttle should be opened to expose all three idle holes. The choke plate should be held fully closed during the cranking. After the engine starts, open the choke slightly. A hole in the choke plate helps to prevent over-choking when the engine is started. The choke should be moved to wide open when the engine is partially warmed up.

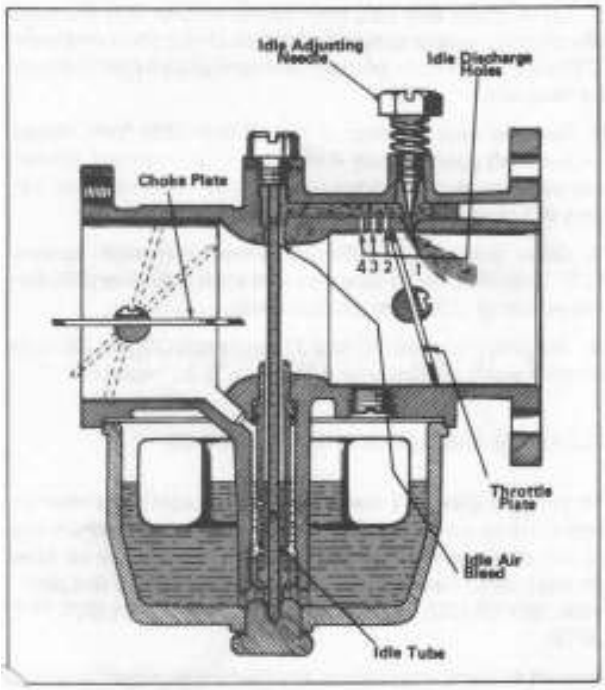

Figure 3-73. Idle and Choke Systems

High Speed (Main Metering) System, Figure 3-74

The fuel for engine operation from off-idle to full throttle range is supplied from the fuel bowl through the main metering jet, metering well and discharge tube. As the fuel flows through the metering well and tube, it mixes with air entering through the well vent to provide the correct fuel air mixture ratio for all engine speeds and loads. A series of air bleed holes in the discharge tube permits the air from the well vent to enter the bowl below the level of the fuel in the float chamber. This reduces the average density of the fuel and enables it to flow freely at low suction. At high engine speeds (and high suction), the proportion of air to fuel through the main metering system is reduced to provide the richer mixture needed for peak performance.

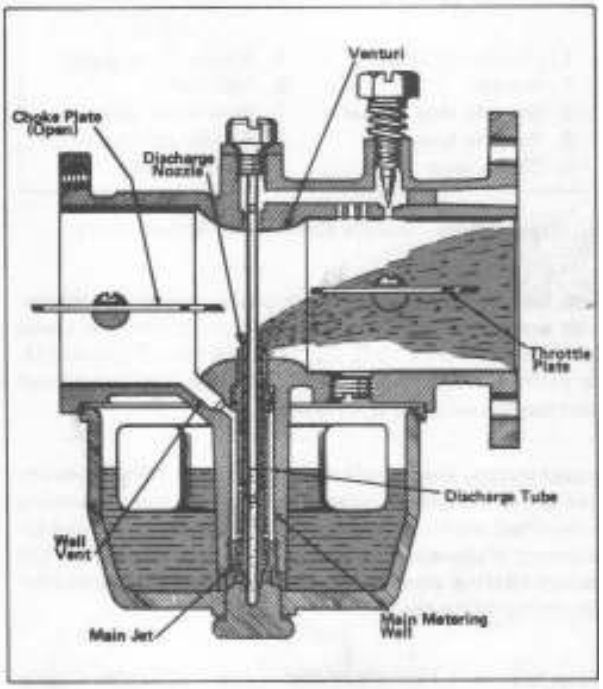

Figure 3-74. High Speed System

ADJUSTING CARBURETOR (See Figure 3-75)

Before attempting to correct faulty engine performance through carburetor adjustment, check over "LOCATING TROUBLES," Section 1. In addition, be sure air cleaner element is clean, and check carburetor and manifold connections to be sure they are tight and not leaking air.

The low speed needle, Figure 3-75, should be turned clockwise, or in, to make leaner mixture, and counterclockwise, or out, to make mixture richer. Needle is held to whatever position set by a spring.

Carburetor may be adjusted as follows:

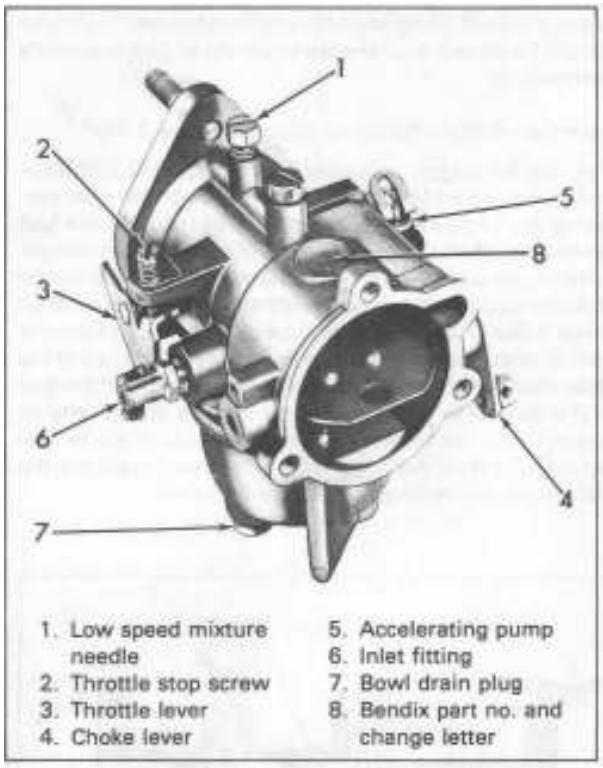

Figure 3-75. Bendix Carburetor Adjustments

Turn low speed mixture needle all the way in (clockwise) until seated (do not overtighten). Back out the low speed needle 1-1/2 turns 1972-73, or 2-1/4 turns 1974 and later models. (With needle in this position, the engine will start but the mixture will be too rich.)

Adjust throttle lever stop screw (2, Figure 3-75) to make engine idle at desired speed with throttle fully closed. Turning screw clockwise makes engine idle faster. Never set idle adjustment to slowest possible speed. An extremely slow idle causes bearing wear, oil consumption and slow speed accelerating difficulties.

Make final readjustment on low speed needle after engine is warm. First in, and then out, to see if engine picks up speed or runs more smoothly. Starting and all around carburetion will be better with low speed mixture adjustment set slightly rich rather than lean. If necessary, make further adjustment on idle stop screw to obtain desired idling engine speed. Recommended idle speed is 700 to 900 rpm.

During high speed operation, fuel is metered by a fixed jet which has no adjustment.

Operating conditions, such as high altitudes or hard service, may require other than the standard main fuel fixed jet. The following main fuel jet orifice sizes are available: No. 90, No. 95, No. 100, No. 105, No. 110, No. 115, No. 120, and No. 125.

NOTE FOR 1973 AND EARLIER

The change letter A or B is stamped near the Basic Bendix carburetor part number 13609 on the carburetor body boss (8, Figure 3-75) for identifying carburetors with modifications. Idle tube 27749-72 (marked A) is standard on carburetors marked with change letter A. Idle tube 27750-72 (marked B) is standard on carburetors marked with change letter B.

There are three holes in accelerating pump shaft to provide more or less fuel upon acceleration – bottom hole for pump shaft pin (37, Figure 3-76) provides richest setting – top hole, leanest setting.

DISASSEMBLING CARBURETOR (Figure 3-76)

Bowl

1. Remove pump lever screw (1) to loosen pump lever (2) from end of throttle shaft. Disengage accelerating pump (3) with boot from fuel bowl assembly and remove pump with lever. Compress piston shaft spring and rotate lever (2) 90 degrees to disengage from shaft roll pin.

2. Remove idle tube (4) and gasket (5). Remove the jet and tube assembly (6) to free bowl (9). Remove fiber washer (7) and O-ring (8) from tube.

Throttle Body

1. Use scribe or heavy wire to press float pin (11) out of float hinges.

2. Remove float assembly (12), float spring (13) and float valve assembly (14) from throttle body.

3. Remove bowl to body gasket (15).

4. Remove idle mixture needle (16) and spring (17). Then remove throttle stop screw (18) and spring (19).

5. Close choke disc (20) and remove screws (21). Remove disc from air intake opening and slide choke shaft and lever (22) out of shaft hole, plunger and spring (22A and 22B) will be released.

6. Remove seal retainer (23) and seal (24) from inside choke shaft opening only if they are to be replaced. Do not remove cup plug (25) from other choke shaft opening unless the plug is damaged and is to be replaced.

7. Close throttle disc (26) and remove two small screws (27). Then remove throttle disc and shaft and lever (28). Remove spring (29) from throttle shaft.

8. Remove retainers (30 and 31) and seals (32 and 33) from throttle shaft bosses only if they are to be replaced.

CLEANING AND INSPECTION (Figure 3-76)

Thoroughly clean all metal parts in a metal parts cleaner and rinse in a solvent. Blow out all passages and channels in the castings with compressed air. Reverse the air flow through each passage to ensure removal of all dirt particles. NEVER USE A WIRE OR DRILL TO CLEAN OUT THE JETS.

Inspect all parts and replace any that are damaged or worn. Always use the correct repair parts.

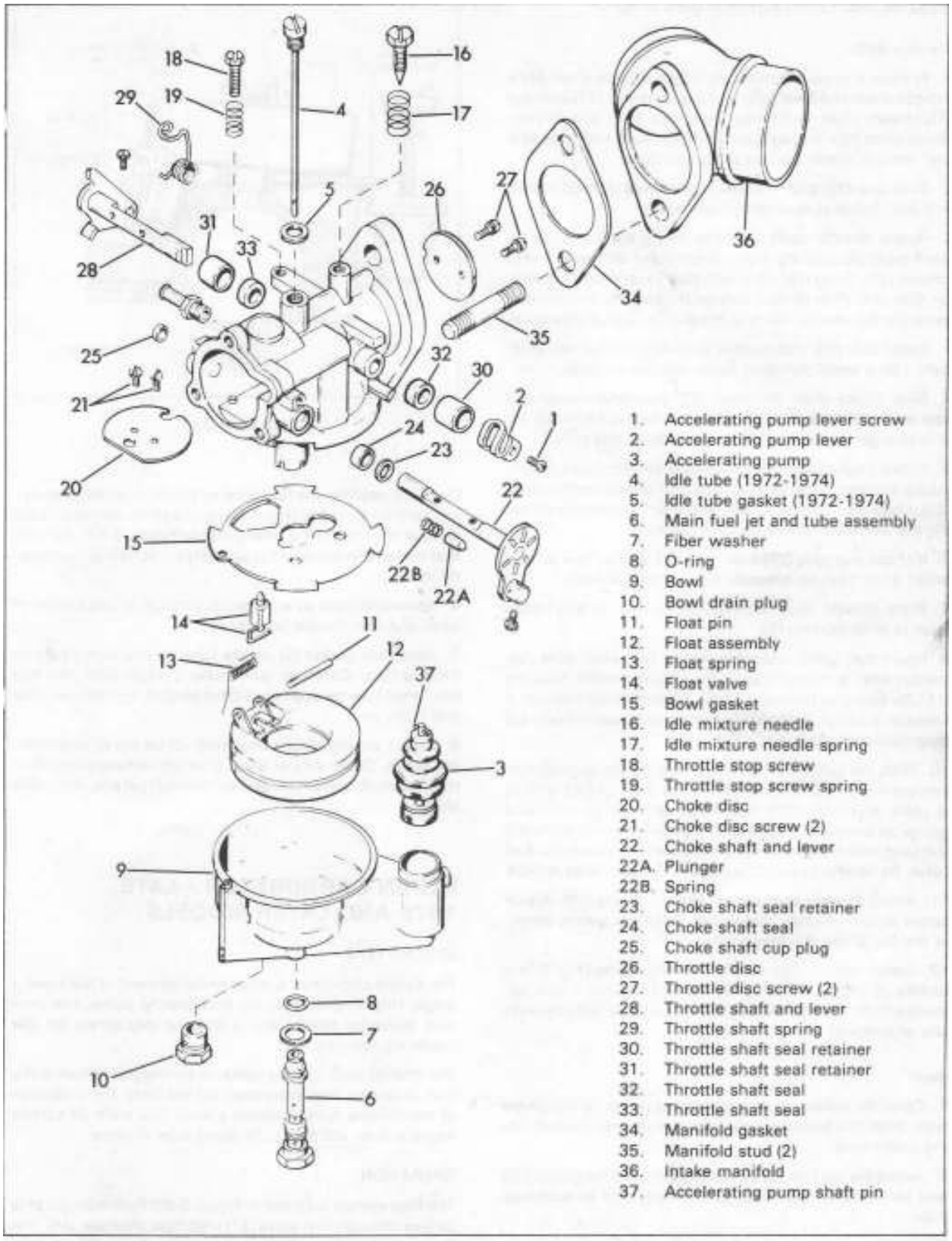

Figure 3-76. Bendix Carburetor - Exploded View - 1972 to Early 1976 Models

ASSEMBLING CARBURETOR (Figure 3-76)

Throttle Body

1. Position throttle return spring (29) on throttle shaft. Slide throttle shaft and lever (28) into seal retainer (31) and seal (33). Insert shaft in throttle shaft hole from side shown. Guide shaft into hole on opposite side of bore and press seal and retainer firmly against shaft hole boss.

2. Slide seal (32) and retainer (30) over end of throttle shaft and seat firmly against shaft hole boss.

3. Rotate throttle shaft until flat center section faces toward manifold opening. Install throttle disc (26) loosely with screws (27). Snap disc open and shut several times to center disc, and then tighten screws holding the throttle disc seated in the casting. Be sure the disc is held tightly closed.

4. Insert seal (24) and retainer washer (23) in choke shaft hole. Use a small punch to stake retainer in place.

5. Slide choke shaft and lever (22) through retainer and seal and seat shaft in hole in opposite side of air intake. Install plunger and spring (22A and 22B) at this time.

6. Rotate choke shaft until flat center section faces toward intake opening. Install choke disc (20) loosely with screws (21). Snap disc open and shut, and then tighten screws using the same procedure as for throttle.

7. If choke cup plug (25) was removed, install new plug in choke shaft hole on opposite side of throttle body.

8. Place throttle body with fuel bowl side up and install bowl to body gasket (15).

9. Insert fuel valve assembly (14) in fuel valve seat. Assemble float spring (13) and float (12) and install float pin (11). Be sure that fuel valve clip is attached to the float tab. If necessary, bend clip to provide minimum clearance with tab (approximately .010 in.).

10. With the carburetor inverted (inlet needle seated), bottom surface of float should be 3/16 in. from gasket surface at point opposite hinge. A 3/16 in. drill can be used as a gauge as shown in Figure 3-77. If adjustment is required, use long nosed pliers to bend the tab that contacts the fuel valve. Be careful to avoid damage to the fuel valve or seat.

11. Install throttle stop screw (18) and spring (19). Adjust screw to open throttle slightly but not far enough to uncover the No. 2 idle discharge hole.

12. Install idle mixture needle (16) and spring (17). Screw needle IN until it seats lightly against the No. 1 idle discharge hole, then back it out 1-1/2 turns as a preliminary idle adjustment.

Bowl

1. Carefully guide cup of accelerating pump (3) into pump well. Seat accelerating pump boot around top of accelerating pump boss.

2. Assemble washer (7) on main jet and discharge tube (6) and assemble O-ring (8) in groove near end of discharge tube.

3. Hold carburetor inverted (with float up) and rotate the long end of the spring upward so that it is against the float.

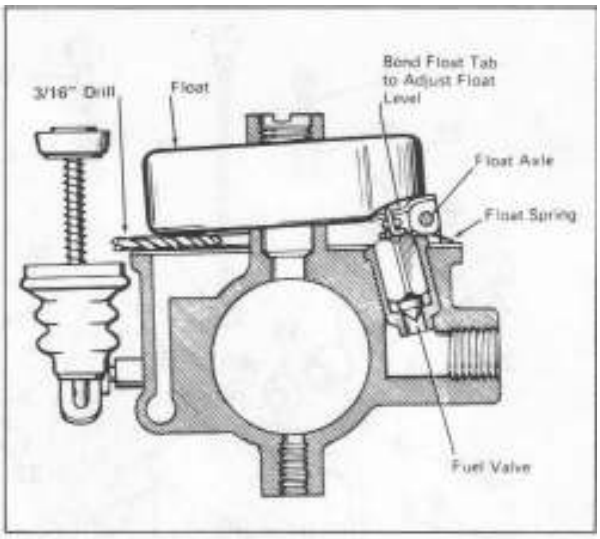

Figure 3-77

Carefully position the fuel bowl on the throttle body releasing the float spring so that the long end of the spring presses against the side of the bowl (refer to Figure 3-77). Be sure that the accelerating jet fits properly in the hole in the throttle body.

4. Assemble main jet and tube (6) through hole in bottom of bowl and into throttle body boss.

5. Assemble gasket (5) on idle tube (4) and insert tube in throttle body. Carefully guide tube through bore and into discharge tube on opposite side of venturi. Tighten idle tube and main jet.

6. Attach accelerating pump lever (2) on top of accelerating pump. Other end of lever goes on rectangular end of throttle shaft. Install pump lever screw (1) in end of throttle shaft.

KEIHIN CARBURETOR - LATE 1976 AND LATER MODELS

DESCRIPTION

The Keihin carburetor is a horizontal type with a fuel bowl, a single ring-shaped float, an accelerating pump, idle mixture adjusting needle and a throttle stop screw for idle speed adjustment.

The throttle body casting contains an integral venturi and a fuel valve seat that is pressed into the body. The underside of the throttle body contains a boss. The main jet screws into the boss and holds the bleed tube in place.

OPERATION

The float system is shown in Figure 3-80. Fuel from gas tank passes through fuel valve (21) onto float chamber (29). The fuel entering causes float to rise until it shuts off fuel valve stopping flow at a level predetermined by float level setting

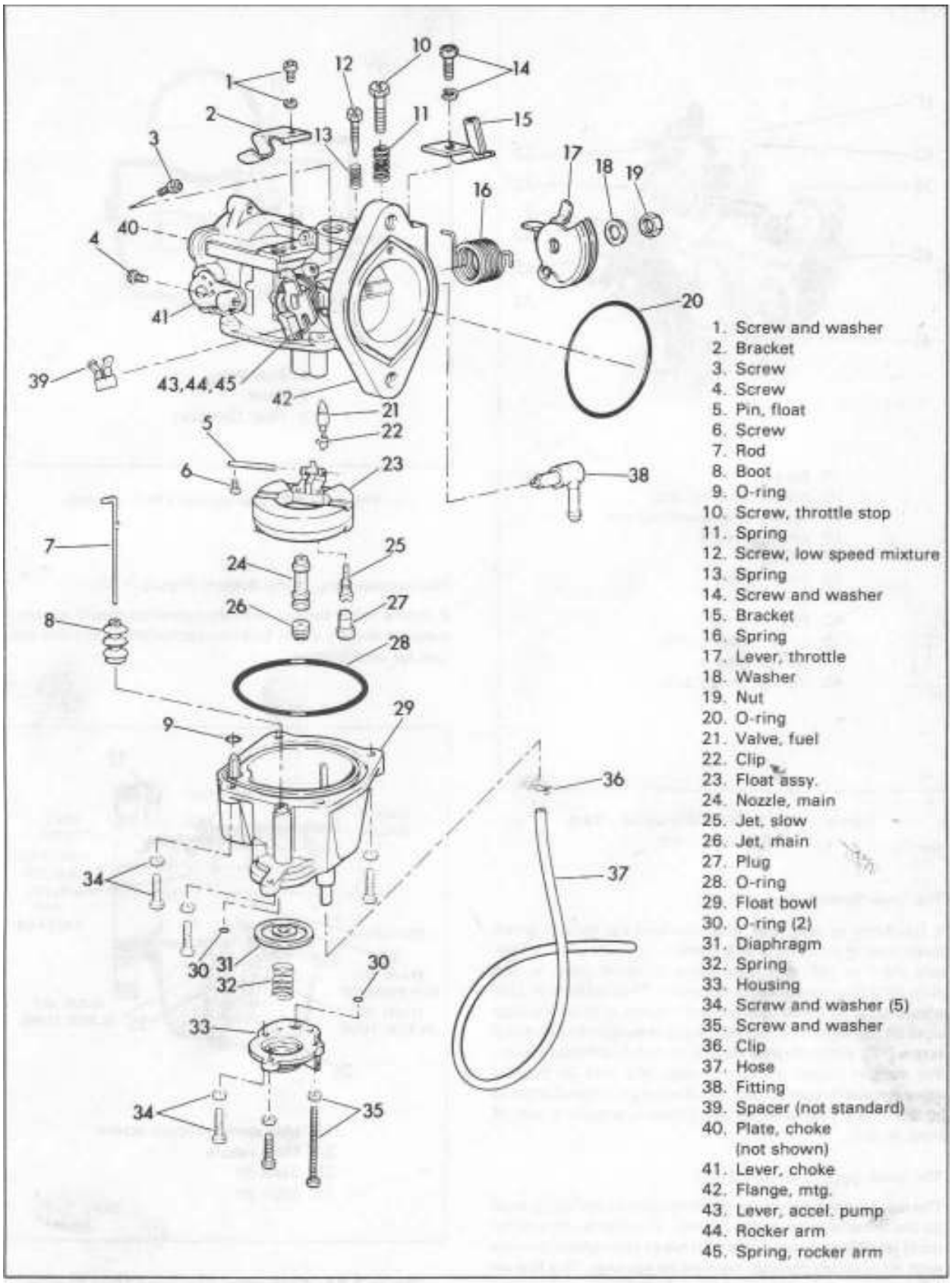

Figure 3-78. Keihin Carburetor - Exploded View - Late 1976 and Later Models

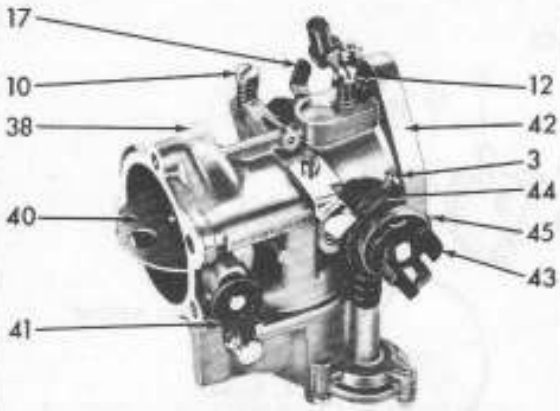

3. Screw
10. Screw, throttle stop
12. Screw, low speed mixture
17. Lever, throttle
38. Fitting
40. Plate, choke
41. Lever, choke
42. Flange, mtg.
43. Lever, accel. pump
44. Rocker arm
45. Spring, rocker arm

Figure 3-79. Keihin Carburetor - Late 1976 and Later

The Slow System (Figure 3-81)

It functions at idle, low, and intermediate speeds when throttle valve is closed or only partially open. At idle, fuel enters main jet (26) and, after being metered there, enters slow jet (25) where it is metered again. The fuel from jet (25) enters slow jet bleed tube where it mixes with air through slow air passage. The fuel mixture is regulated by adjusting screw (12). When throttle valve is closed, fuel mixture flows into venturi almost entirely through idle port. As throttle valve gradually opens, fuel mix discharge is transferred to bypass. Note that slow jet bleed tube is actually a part of slow jet (25).

The Main System (Figure 3-81)

The main system functions at intermediate and high speeds as the throttle valve opens further. The fuel is metered by main jet (26) and enters main jet bleed tube where it mixes with air entering through main jet air passage. This fuel air mixture then exits from main nozzle (24) into venturi.

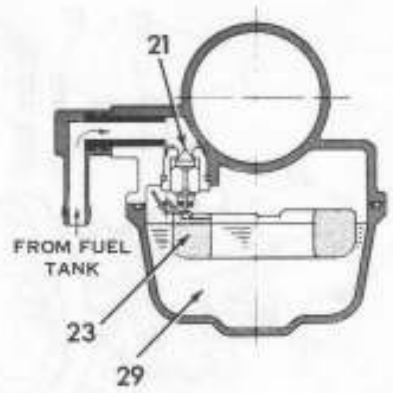

1. Fuel Valve
2. Float
3. Float Chamber

Figure 3-80. Carburetor Float System

The Accelerating Pump System (Figure 3-82)

It works with sudden throttle openings (rapid accelerations) to quickly inject fuel into carburetor to provide extra fuel for accelerating.

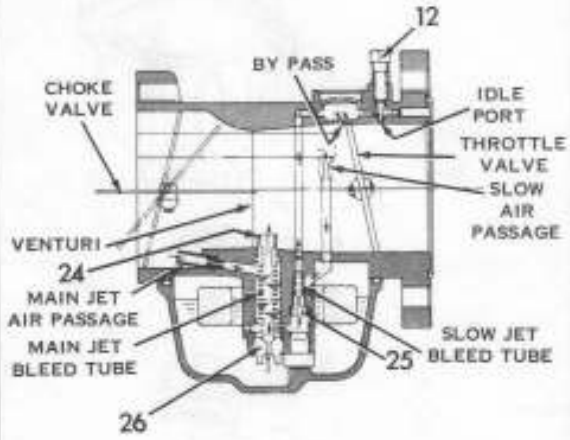

12. Low speed mixture screw
24. Main nozzle
25. Slow jet
26. Main jet

Figure 3-81. Carburetor Slow and Main System

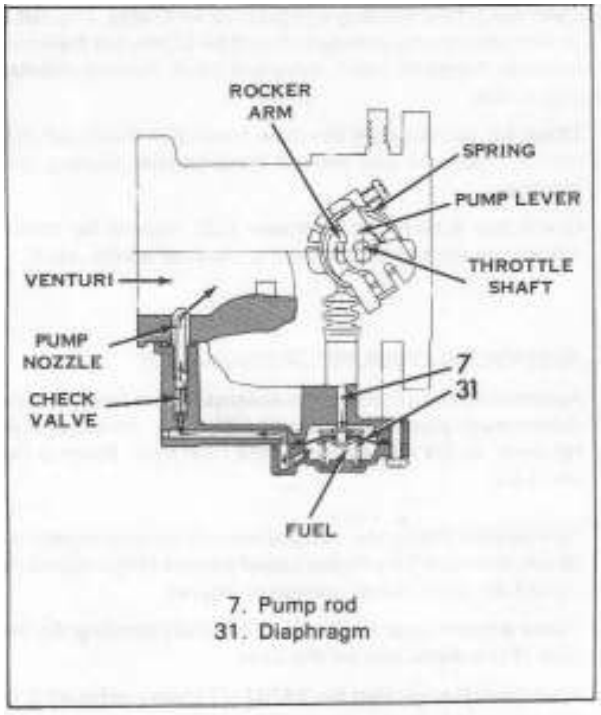

Figure 3-82. Carburetor Accelerating Pump System

Rapid throttle action pushes pump rod (7) down, flexing diaphragm (31). This flexing action compresses fuel underneath diaphragm, forcing it up past check valve and out pump nozzle into venturi. The check valve prevents backflow while pump nozzle meters flow. Spring action then returns diaphragm to its original position. As diaphragm returns, a new supply of fuel flows in under diaphragm so system will be ready to repeat cycle with next rapid throttle action.

The Choke System (Figure 3-81)

The choke is manually set by pulling choke button out. By adjusting choke button, choke valve can be positioned either completely closed (fully choked for cold engine), partially open, or fully open (off for warm engine).

ADJUSTING CARBURETOR

Refer to Figure 3-79 while performing carburetor adjustment.

Adjust carburetor as follows. Turn low speed mixture screw (12) all the way in, clockwise, until just seated. Do not overtighten. Back out 7/8 turn. Screw in this position, the engine will start but the mixture will be too rich.

NOTE

Low speed mixture screw (12) is turned clockwise, or in, to make leaner mixture, and counterclockwise, or out, to make mixture richer. Screw is held in position by a spring (13).

Adjust throttle stop screw (10) to make engine idle at desired speed with throttle closed. Turning screw clockwise opens throttle plate for faster idle. Never set idle adjustment to slowest possible speed. An extremely slow idle causes bearing wear, oil consumption, and slow speed accelerating difficulties. Recommended idle speed is 700 to 900 rpm.

Make final readjustment on low speed mixture screw (12) after engine is warm. First turn screw in, then out, to see if engine picks up speed or runs more smoothly. Starting and all around performance will be better with mixture adjustment set slightly richer than leaner. If necessary, make further adjustment on throttle stop screw (10) to obtain correct engine idling speed.

During high speed operation, fuel is metered by a main jet (26) which has no adjustment. Operating conditions, such as high altitudes or hard service, may require a different size main jet other than the standard. The following main jet sizes are available:

Main Jet Size	
1.85mm	1.70mm
1.80mm	1.65mm
1.75mm	1.60mm

The amount of fuel injected by the accelerating pump is adjusted by means of the rocker arm adjusting screw (3). Factory adjustment is 6 mm (approximately 1/4 in.) between end of screw and stop. Back screw out for more fuel volume; in for less. The rocker arm spring (45) controls stroke duration and is adjustable by means of three locating notches in the accelerator pump rocker arm (44). Center notch is standard adjustment.

DISASSEMBLING (Figure 3-78)

Disconnect throttle wire and choke wire from their respective operating levers. Detach carburetor from engine by removing nuts and washers from mounting studs.

Disassemble accelerating pump parts as follows. Remove accelerating pump housing (33) by removing three sets of screws and washers (34 and 35). Remove spring (32), diaphragm (31) and two O-rings (30), taking care when lifting off housing (33) to catch spring (32). Also, be careful not to damage housing mounting surface to prevent fuel leakage when reassembled.

Disassemble float chamber as follows. Detach float chamber (29) from body by removing three sets of screws and washers (34). Remove screw (6) which retains float pin (5). Remove float pin (5) and remove float (23). Slip off fuel valve (21) from metal clip on float. If needed, remove clip (22) from fuel valve (21). Take care not to damage rubber needle portion of fuel valve (21). Also be careful not to damage pump nozzle and overflow pipe which are built into the float chamber. Remove O-ring (28) from slot in float chamber wall.

The removal of the float chamber will allow pump rod (7) and boot (8) to be removed next.

Disassemble carburetor body as follows. Pull plug (27) out of tube above slow jet (25). Unscrew slow jet (25) and main jet (26). Tip body and let main nozzle (24) slide out of main tube.

Remove O-ring (20) from slot in body mounting flange. Unscrew and remove nut (19) along with washer (18). This will free throttle lever (17) and spring (16) so they can be pulled off throttle shaft.

Unscrew throttle stop screw (10) and low speed mixture screw (12) along with associated springs (11) and (13), respectively.

As required, remove brackets (2) and (15) by removing screws and washers (1) and (14), respectively.

The throttle valve assembly and choke valve assembly (shaft, valve, plate and associated parts) usually are not disassembled. These parts are matched to the individual carburetor during manufacture. In both cases, screws securing plates to shafts have peened ends, the threads of which would be destroyed if screws are removed. In the case of throttle assembly, the position of bypass hole was positioned precisely to match lip of valve and would be changed if taken apart and reassembled. If problems arise involving these assemblies, the complete carburetor is usually replaced.

This completes disassembly of carburetor. Clean and inspect before reassembling.

CLEANING AND INSPECTING (Figure 3-78)

Clean carburetor body in solvent such as "GUNK" to remove varnish and carbon stains from fuel and air passages. Blow body dry with compressed air. Reverse air flow through each passage to ensure removal of all dirt particles. Never scrape carbon deposits from carburetor parts with knife or other steel instrument. Also, do not use wires or drills to clean small holes. To do so may cause burrs or change hole sizes. This is particularly important to observe when cleaning jet openings.

Inspect all parts and replace any that are damaged or worn. The most important checks are as follows.

Check accelerating pump. Inspect diaphragm (31) for pinholes, cracks or deformation and replace if necessary. Inspect rod (7) for bending and boot (8) for cracks. Any dirt in accelerating pump passage should be blown out from side opposite nozzle or check valve will close, making cleaning impossible.

Check for dirt clogging overflow hose (37). If clogged, fuel may not flow out and instead flood engine, causing poor starting.

Check low speed mixture screw (12). Inspect for carbon lodging on tip and for damage to taper or screw, itself.

ASSEMBLING CARBURETOR (Figure 3-78)

Assembling the carburetor is essentially the reverse of the disassembly procedure outlined previously. An added step, however, is the adjustment of the float level. Refer to Figure 3-83.

As shown in the figure, two positions of the float valve must be set: the valve fully closed (upper portion of figure) and the valve fully open (lower portion of figure).

These adjustments are made by carefully bending the two tabs of the metal clip on the float.

Float Level Gauge, Part No. 94752-77 shown in Figure 3-83 can be used to check the float setting.

INSTALLING CARBURETOR ON MOTORCYCLE

Mount the carburetor on the motorcycle as follows. Check O-ring (30), Figure 3-78, on the mounting flange to see that it is okay and in its groove. Position carburetor on two engine mounting studs and secure with nuts and washers.

Insert throttle wire through slot in bracket (15) and wrap around into groove in throttle lever (17). Place throttle wire end ferrule into hole in lever. Check operation by twisting throttle control on handlebar. Throttle should open and close fully with handlebar grip movement.

Attach choke wire to choke lever (41) and confirm operation of choke by operating carburetor choke knob.

Attach fuel line from gas tank to fitting (38) on carburetor body. Position overflow tube (37) downward so any fuel overflow will drip away from hot engine. Open fuel valve. Install air cleaner.

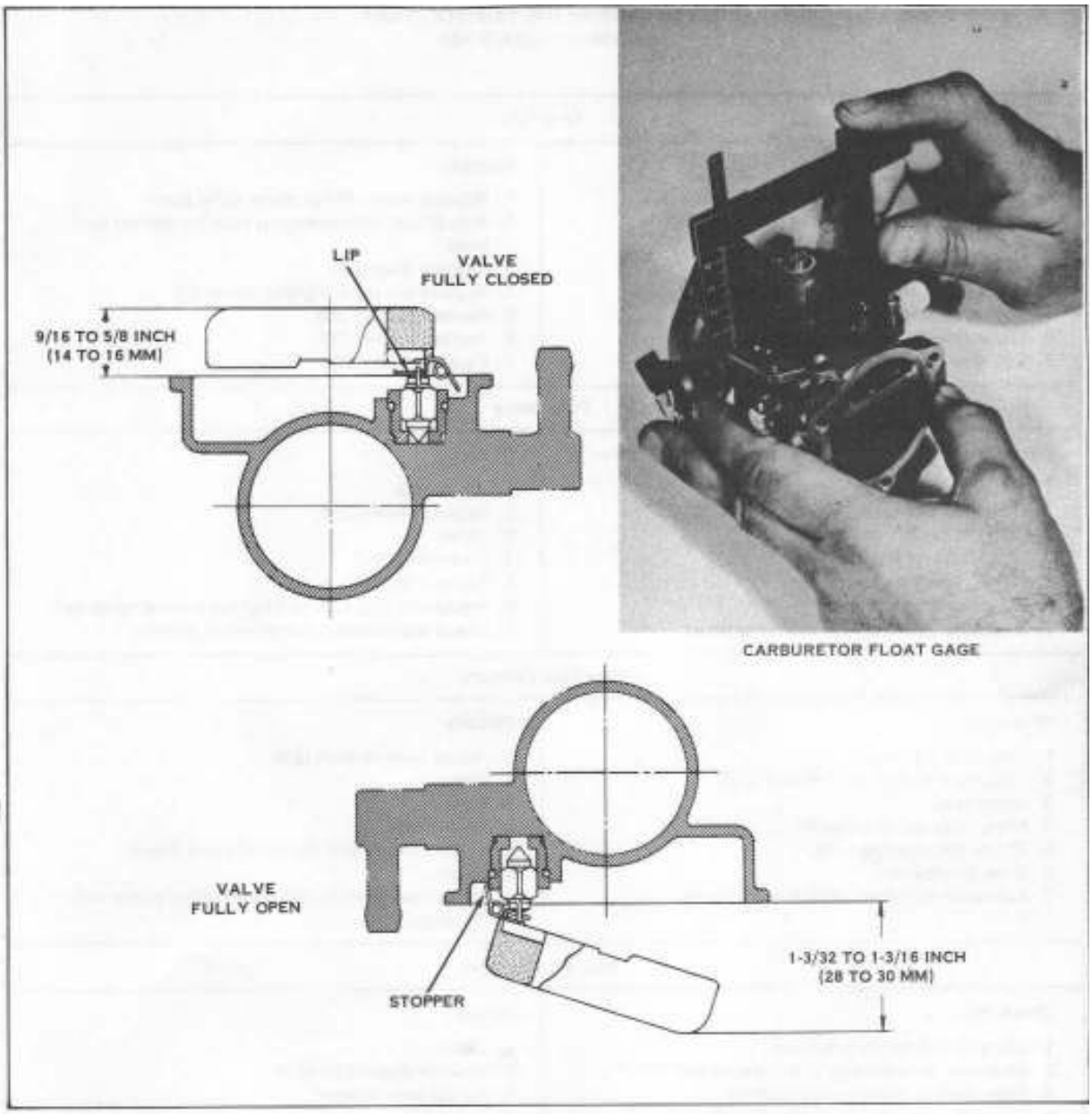

Figure 3-83. Carburetor Float Setting

KEIHIN CARBURETOR TROUBLE CHART
(Refer to Figure 3-78)

Overflow	
Check for:	Remedy:
1. Worn fuel valve (21) or dirty fuel valve seat.	1. Replace valve (21) or clean valve seat.
2. Improper fuel level in float chamber (29).	2. Adjust float (29) mounting tabs for correct fuel level.
3. Worn float (23) mounting tabs.	3. Replace float (23).
4. Worn float pin (5) or loose screw (5).	4. Replace pin (5) or tighten screw (6).
5. Damaged float chamber O-ring (28).	5. Replace O-ring (28).
6. Loose float chamber screws (34).	6. Tighten screws (34).
7. Deformed float (23).	7. Replace float (23).
Poor Idling	
Check for:	Remedy:
1. Idling improperly adjusted.	1. Adjust idle.
2. Damaged low speed mixture screw (12).	2. Replace screw (12).
3. Clogged bypass or idle port.	3. Clean.
4. Clogged slow jet (25).	4. Clean jet (25).
5. Loose slow jet (25).	5. Tighten jet (25).
6. Air leaking into system.	6. Replace O-ring (20) and tighten mounting screws.
7. Excessive fuel from accelerating pump.	7. Check accelerating pump rod (7) length.
Poor Fuel Economy	
Check for:	Remedy:
1. Fuel level too high.	1. Adjust level of float (23).
2. Clogged bleed tubes (24) and (25).	2. Clean.
3. Loose jets.	3. Tighten.
4. Idling improperly adjusted.	4. Adjust idle.
5. Choke not opening fully.	5. Inspect choke and choke wire and adjust.
6. Dirty air cleaner.	6. Clean.
7. Excessive fuel from accelerating pump.	7. Adjust fuel flow. Check accelerating pump rod (7) length.
Poor Acceleration	
Check for:	Remedy:
1. Clogged accelerating system.	1. Clean.
2. Damaged accelerating pump diaphragm (31).	2. Replace diaphragm (31).
3. Slow system improperly adjusted.	3. Adjust slow system.
4. Clogged slow jet (25) or bleed tube.	4. Clean.
5. Fuel level too low.	5. Adjust level of float (23).
Hard Starting	
Check for:	Remedy:
1. Choke valve (41) not operating properly.	1. Adjust choke system.
2. Idling improperly adjusted.	2. Adjust idle.
3. Generally dirty carburetor.	3. Disassemble and clean.
4. Loose carburetor mounting nuts.	4. Tighten mounting nuts.
5. Fuel overflow.	5. Inspect float (23) and fuel valve (21) and adjust or replace.

Poor Performance On Road	
Check for:	Remedy:
1. Idling improperly adjusted.	1. Adjust idle.
2. Fuel overflow.	2. Inspect float (23) and fuel valve (21) and adjust or replace.
3. Main jet (26) loosened.	3. Inspect main jet (26) and tighten.
4. Damaged O-ring (20).	4. Replace O-ring (20).
5. Faulty operation of accelerating pump.	5. Correct rod (7) length.
Poor High Speed Performance	
Check for:	Remedy:
1. Loose main jet (26).	1. Inspect main jet (26) and tighten.
2. Improper fuel level in float chamber (29).	2. Adjust float (23) mounting tabs for correct fuel level.
3. Dirt lodged in strainer in fuel tank.	3. Clean strainer.
4. Clogged main jet (26) or main jet air passage.	4. Clean.
Abnormal Combustion (Fuel Mixture)	
Check for:	Remedy:
1. Incorrect fuel mixture.	1. Adjust carburetor.
2. Generally dirty carburetor.	2. Disassemble and clean.
3. Dirty or clogged fuel line.	3. Clean fuel line or replace.
4. Air leaking into system.	4. Check mounting nuts for tightness or replace O-ring (20).
Lose of Power (Fuel Insufficient)	
Check for:	Remedy:
1. Generally dirty carburetor.	1. Disassemble and clean.
2. Clogged fuel line.	2. Clean.
3. Dirty fuel tank.	3. Clean.
4. Air leaking into system.	4. Check mounting nuts for tightness or replace O-ring (20).
5. Accelerating pump not working.	5. Repair and adjust.
6. Clogged fuel strainer in fuel tank.	6. Clean strainer.
Loss of Power (Air Insufficient)	
Check for:	Remedy:
1. Dirty air cleaner.	1. Clean air cleaner.
2. Throttle cable not working.	2. Check and repair throttle cable.

AIR CLEANER

The air cleaner consists of a back plate, filter element and cover, arranged so all air drawn into carburetor passes through the filter. A mesh element traps all air borne dust to keep it from entering carburetor and engine.

1970-71 Metal Mesh Type Filter Element

In normal service on hard surfaced roads, remove air cleaner mesh, wash in non-flammable solvent, and saturate with engine oil at least every 1,000 miles, or more often under dusty service conditions. In extremely dusty service, clean and oil filter mesh every 100 miles or at least once a day. Use the same oil as used in the engine.

1972 and Later Plastic Foam Type Filter Element

Remove air cleaner cover and inspect filter element at least every 1000 miles, or more often under dusty service conditions. The need for servicing is indicated by the appearance of the outside surface of the filter. Filter should be cleaned and reoiled if a film of dirt has built up covering the surface pores, or if light spots show on the surface which means that dust is drying out the oil. A dirty, dark appearance is normal, as long as pores in the filter remain open and covered with an oil film.

To clean filter, remove it from screen and wash it in a non-flammable petroleum solvent or detergent and water. Allow to dry thoroughly and saturate with same weight oil as recommended for engine crankcase. Apply oil to element liberally working in with hands and fingers until element is uniform in color indicating uniform saturation. After excess oil has drained off, replace element on screen so that three grooves are toward screen, and reinstall in engine.

FUEL TANK

GENERAL

The fuel tanks are of welded steel construction.

Fuel tanks are treated to resist rusting. However, when motorcycle stands unoperated for any reasonable length of time, tanks should be drained and the tank interior bathed with an oil-fuel mixture of equal proportions. The fuel will evaporate leaving a protective oil film on tank walls. Moisture formation and subsequent damage may also be avoided by using only "premium grade" fuels with moisture absorbing additives.

REPAIRING LEAKING TANKS

Many tank leaks may be repaired with epoxy type materials. Follow manufacturers instructions.

Tank leaks may be arc welded, gas welded or soldered. However, only firms or persons qualified to make such repairs should be entrusted with the operation.

WARNING — If ALL traces of fuel are not purged, an open flame repair may result in a tank explosion. Extreme caution in all tank repair is recommended.

FUEL SUPPLY VALVE

The fuel supply valve is located under the fuel tank. Two types are used: type A (1974 and earlier) and type B (1975 and later). Both are covered below under separate headings.

TYPE A VALVE (1974 AND EARLIER) (Figure 3-84)

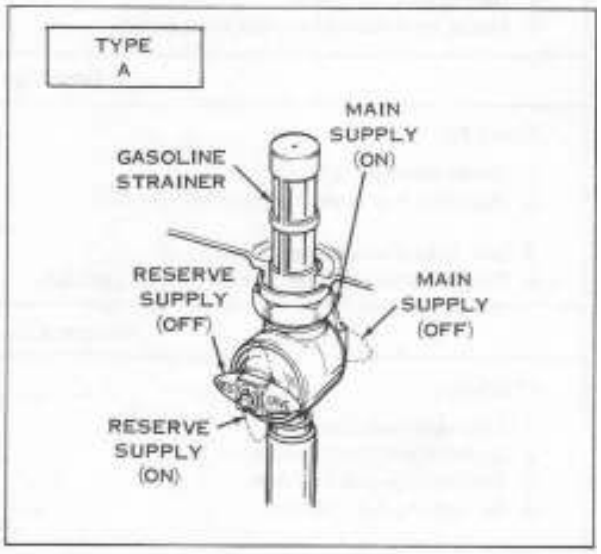

Figure 3-84. Diaphragm Type Fuel Supply Valve and Strainer

The valve has two handles; one is marked "reserve" and the other is unmarked. Fuel to carburetor is shut off when both handles are in horizontal position. Turning the unmarked handle to vertical position turns on main fuel supply; turning "reserve" handle to vertical position turns on reverse supply.

If the handle is too loose, add enough .006 in. thick Shims, Part No. 6160P, to provide only slight clearance when valve is closed.

The fuel strainer is located on top of the supply valve inside the fuel tank. If the supply of fuel is impeded, as indicated by irregular carburetion, remove the supply valve from the tank and thoroughly clean the strainer. Be sure to drain the tank before removing the supply valve.

Before installing supply valve, coat threads with a fuel sealer.

TYPE B VALVE (1975 AND LATER) (Figure 3-85)

Gasoline to carburetor is shut off when handle is in horizontal position. Turning the handle down to vertical position turns on main gasoline supply; turning handle up to vertical position turns on reserve supply. Valve should always be closed when engine is not running.

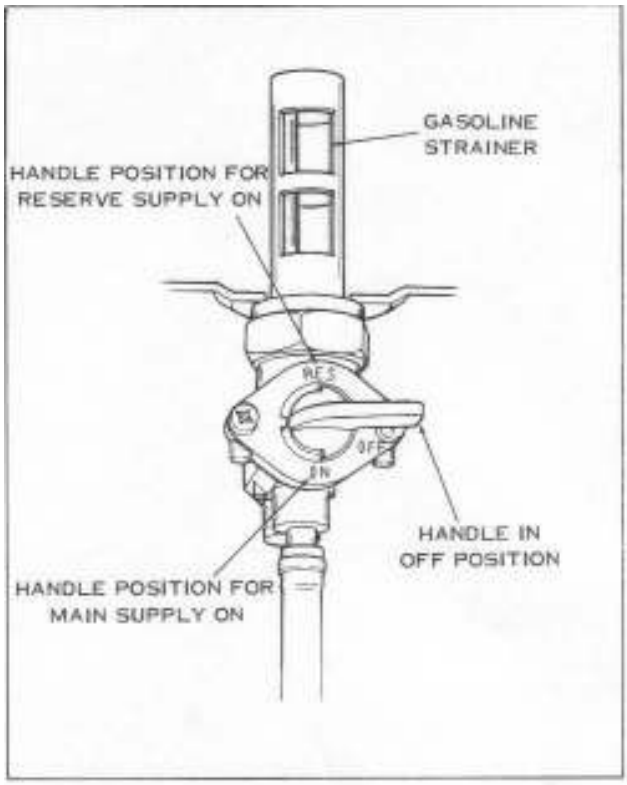

Figure 3-85. Single Handle Type Fuel Supply Valve and Strainer

TOOLS

Fits 1 in. hex.

Part No. 94545-26 Crankpin Nut and Sprocket Nut Wrench

Fits 1-5/16 in. and 1-3/16 in. nuts.

Part No. 94546-41 Flywheel Shaft Nut Wrench

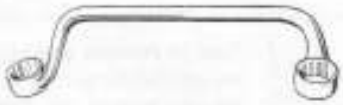

Part No. 94589-29A Head Bolt Wrench (9/16 in.)

Part No. 94590-73 Cylinder Head Bolt Socket Handle (3/8 in. Square Drive)

Used to check inlet valve and internal leakage.

Part No. 94750-68 Carburetor Leakage Tester

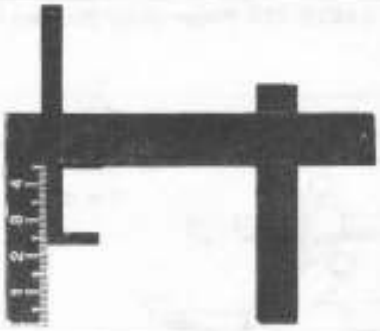

Part No. 94752-77 Carburetor Float Gauge

Used for reaming pistons and upper connecting rod bushings.

Part No. 94800-26 Spiral Expansion Reamer

One piece rear intake cam gear cover bushing reamer.

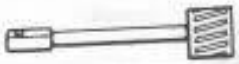

Part No. 94803-67 Rear Intake Cam Shaft Bushing Reamer

Used to line ream replacement rocker arm bushings to correct size.

Part No. 94804-57 Rocker Arm Bushing Reamer

9/16 in. reamer.

Part No. 94806-57 Idler Gear Bushing Reamer

Used to size pinion shaft cover bushings.

Part No. 94812-37A Pinion Shaft Bushing Reamer

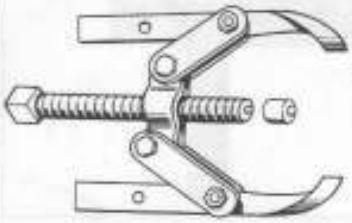

Has center adapter for pulling parts from a small diameter shaft.

Part No. 95635-46 All Purpose Claw Puller

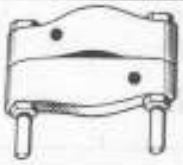

Used in combination with claw puller for pulling close fitting gears or bearings.

Part No. 95637-46 Wedge Attachment for Claw Puller

Used to pull tappet guide from crankcase after tappet body adjusting screw is removed.

Part No. 95724-57 Tappet Guide Puller

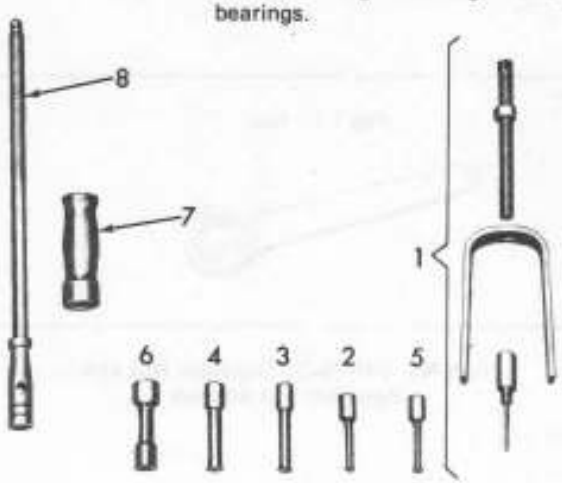

For removing bushings and bearings.

Part No. 95760-69 Bushing and Bearing Puller Tool Set (Includes Items 1, 2, 3, and 4). Items 5 (95768-69), 6 (95769-69), 7 (95770-69) and 8 (95771-69) are optional extras

Used to hold connecting rod firmly so accurate work can be done when fitting piston pin bushing without disassembling crankcase.

Part No. 95952-33 Connecting Rod Clamping Tool

Used to remove and replace piston pin bushings without removing connecting rod from crankcase.

Part No. 95970-32A Piston Pin Bushing Tool

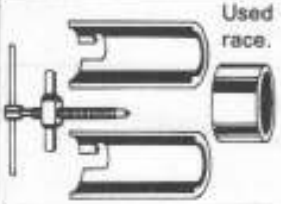

Used to pull bearing inner roller race.

Part No. 96015-52 (1976 and earlier)
96015-77 (1977 and 1978)
Sprocket Shaft Timken Bearing Inner Race Puller

Used to remove sprocket shaft extension.

Part No. 96015-56 (1976 and earlier)
96015-77 (1977 and 1978)
Sprocket Shaft Extension and Bearing Puller

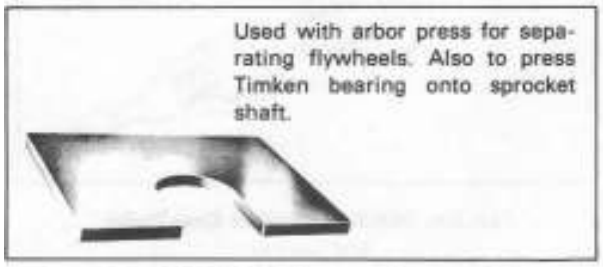

Used with arbor press for separating flywheels. Also to press Timken bearing onto sprocket shaft.

Part No. 96137-52A Flywheel Support Plate

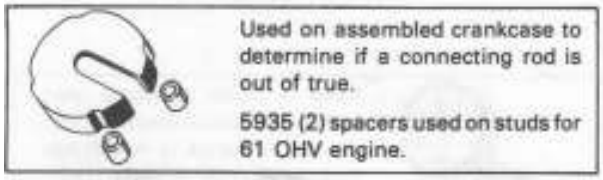

Used on assembled crankcase to determine if a connecting rod is out of true.

5935 (2) spacers used on studs for 61 OHV engine.

Part No. 96181-26 Piston Squaring Plate

Special pliers for removing and replacing retaining rings.

96215-49 Small.
96216-49 Large.

Internal Lock Ring Pliers

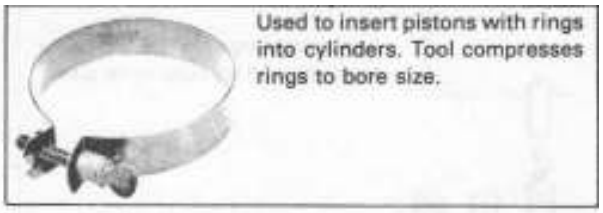

Used to insert pistons with rings into cylinders. Tool compresses rings to bore size.

Part No. 96331-57 Piston Inserter Ring Tools

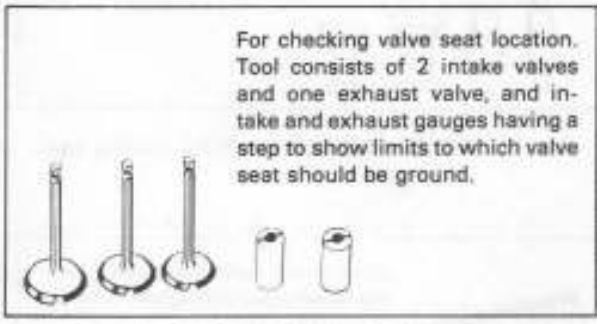

For checking valve seat location. Tool consists of 2 intake valves and one exhaust valve, and intake and exhaust gauges having a step to show limits to which valve seat should be ground.

Part No. 96489-63 Valve Seating Gauge Set - Sportster

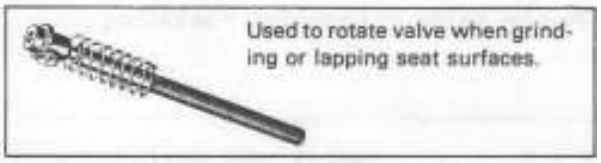

Used to rotate valve when grinding or lapping seat surfaces.

Part No. 96550-36 Valve Grinding Tool

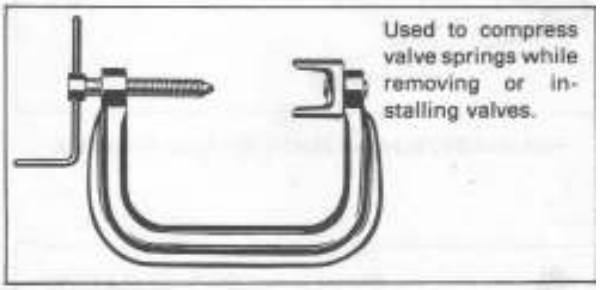

Used to compress valve springs while removing or installing valves.

Part No. 96600-36 Valve Spring Compressor

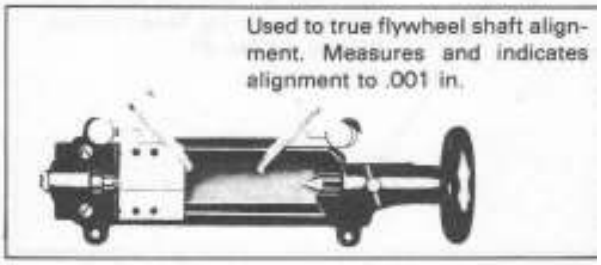

Used to true flywheel shaft alignment. Measures and indicates alignment to .001 in.

Part No. 96650-30 Truing Stand

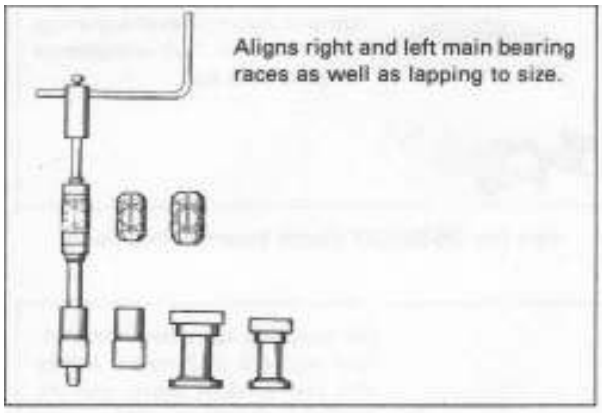

Aligns right and left main bearing races as well as lapping to size.

Part No. 96710-40 Crankcase Main Bearing Lap

Special fixture with adjustable platform used with Torque Wrench, Part No. 96795-47.

Part No. 96796-47 Valve Spring Tester

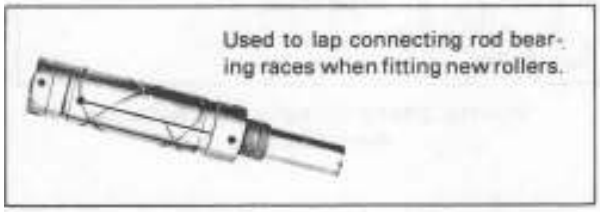

Used to lap connecting rod bearing races when fitting new rollers.

Part No. 96740-36 Connecting Rod Lapping Arbor

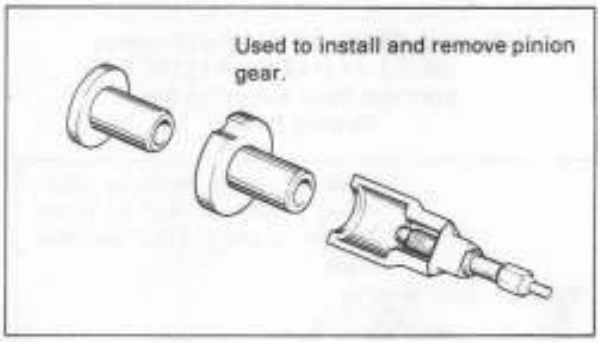

Used to install and remove pinion gear.

Part No. 96830-51 Pinion Gear Puller and Collars

Used to install spiral piston pin lock rings.

96781-72 plug for 1972 larger dia. piston.

Part No. 96780-58A Piston Pin Lock Ring Tool

Range 0 to 100 ft-lbs (1200 in-lbs). Used to tighten head cylinder, manifold and generator bolts (etc.) where a definite, uniform tightness is specified. Also used with Valve Spring Tester Fixture, Part No. 96796-47.

Part No. 96795-47 Torque Wrench

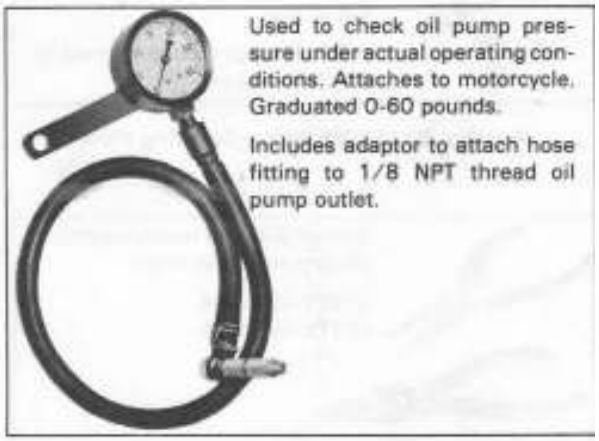

Used to check oil pump pressure under actual operating conditions. Attaches to motorcycle. Graduated 0-60 pounds.

Includes adaptor to attach hose fitting to 1/8 NPT thread oil pump outlet.

Part No. 96921-52 Oil Pressure Gauge

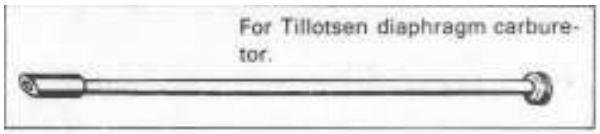

Part No. 96960-68 Carburetor Check Valve Test Tool

Part No. 96962-68 Carburetor Main Nozzle Punch

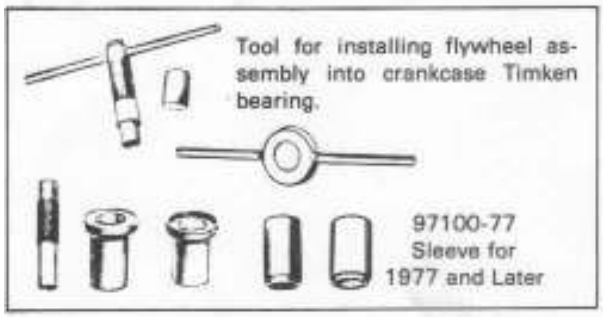

Part No. 97081-54A Sprocket Shaft Bearing Installing Tool

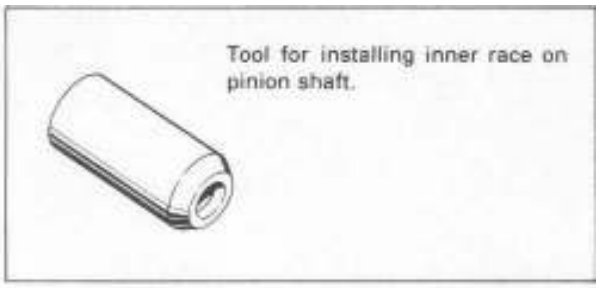

Part No. 97080-77 Bearing Guide (1977 and Later)

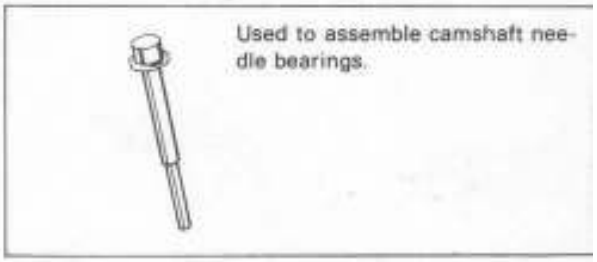

Part No. 97273-60 Needle Bearing Tool

Part No. 97087-65 Hose Clamp Pliers

TABLE OF CONTENTS

PAGE

General 4-1
Clutch 4-3
Kick Starter 4-17
Electric Starter 4-21
Transmission 4-23
Tools 4-31

GENERAL

SPECIFICATIONS

CLUTCH

Type (1970)	Dry-multiple disc
Type (1971 and later)	Wet-multiple disc
Capacity (1971 and later)	1900 in-lbs
Set up Spring Pressure	
1970	150 lbs
1971	234 lbs
1972	257 lbs
Spring adjustment	
1970	3/16 in. from inner surface of spring tension adjusting plate to outer surface of spring cup flange
1971 to 1973	11/32 in. from outer surface of outer drive plate to outer surface of releasing disc
Late 1974 and later	Fixed spacers std. length 1.530 in.
Clutch bearing	.0005-.0029 in. loose
Clutch cover (1970)	Must be leakproof. Do not coat gasket with sealer
Clutch release rod movement	
1970	.095-.115 in.

PRIMARY CHAIN

Type	3/8 in. pitch triple chain
Looseness	5/8 to 7/8 in. slack (cold engine) 3/8 to 5/8 in. slack (hot engine)

KICK STARTER

Minimum clearance between clutch teeth on starter clutch ratchet gear and starter ratchet on clutch shell	.040 in. with starter crank in up position
Crankshaft endplay	.001-.007 in.

GEAR BOX

Shifter mechanism	Must operate freely in all positions

MAINSHAFT GROUP

Clutch gear ball bearing in access cover	.0001-.0012 in. loose
Ball bearing on clutch gear	.0001 in. loose – .0009 in. tight
Clutch gear bushing on mainshaft	.001-.002 in. loose
Mainshaft right side roller bearing	.0006-.0014 in. loose
Mainshaft end play	.003-.009 in. (with all axial play removed)
Third gear	
On shaft	.002-.003 in. loose
End play	.012-.030 in.

COUNTERSHAFT GROUP

Countershaft end bearings	Retained needle roller bearing
Bearing fit on shaft ends	.0005-.0029 in. loose
Bearing fit in case	press
End play	.004-.009 in.
Second gear	
On shaft	.001-.0025 in. loose
Low gear	
On shaft	.0005-.0016 in. loose
End play	.004-.009 in.
Drive gear	
On shaft	.0005-.0030 in. loose
End play	.004-.009 in.

CLEARANCE BETWEEN CLUTCH FACES

Countershaft low and third gear	.038-.058 in.
Countershaft second and third gear	.038-.058 in.
Mainshaft clutch gear and second gear	.043-.083 in.
Mainshaft third gear and second gear	.043-.083 in.
Shifter shaft end play (1976 and earlier)	.010-.030 in.

DESCRIPTION

GENERAL

The transmission consists of three major assemblies including the clutch, starter and gear box.

CLUTCH

The purpose of the clutch is to disengage and engage the engine from the transmission for starting, stopping and shifting gears.

The Sportster clutch is a multiple disc clutch with steel plates and fiber (friction) plates set alternately in the clutch shell and sprocket housing. The friction plates are keyed to the clutch shell and the steel plates to the clutch hub and through it, to the transmission and rear wheel. The plates driven by the engine are called drive plates, those connected to the clutch hub, the driven plates.

When the clutch is fully engaged, springs force the plates together and cause them to turn as a unit, with the result that the power transmitted through the engine sprocket, primary drive chain and clutch is transferred to the rear wheel through the transmission.

STARTER

On the XLCH Model a kick starter provides a means of starting an engine by manual power. When the lever is moved in downward stroke, ratchet teeth of starter clutch gear and starter clutch are engaged, transmitting the force to clutch sprocket, primary drive chain and to engine sprocket.

On the XLH model, an electric starter motor and solenoid activated drive pinion engages a ring gear on the clutch to crank the engine.

GEAR BOX

The Sportster gear box is a 4-speed constant mesh type, (contained in an extension of the crankcase), that permits the rider to vary the ratio of engine speed to the rear driving wheel speed in order to meet the varying conditions of operation.

The transmission is foot operated by the gear shifter lever which transmits the force through a gear shifter shaft, actuating a pawl carrier, pawls and gear shifter cam. The shifter cam moves shifter forks which slide a series of gear clutches on the mainshaft and countershaft into mesh with the various gears to obtain the desired gear ratios.

GENERAL

DIAGNOSIS CHART

Effect	Cause (Check in following order)	Remedy
Clutch slips	Incorrect clutch release adjustment	Check and adjust clutch release mechanism as described under "ADJUSTING CLUTCH RELEASE MECHANISM."
	1970: Sticking release worm and lever 1971: Sticking release ramp and lever	Check for binding clutch control cable, binding release ramp. See "REPLACING CLUTCH CONTROL CABLE AND COIL" and "ASSEMBLING CLUTCH RELEASE MECHANISM."
	Insufficient clutch spring tension	Check and adjust clutch spring tension as described under "ADJUSTING CLUTCH SPRING TENSION."
	1970: Worn or oil-soaked friction discs 1971: Worn friction discs	Replace friction discs. See "INSPECTING AND REPAIRING CLUTCH."
Clutch drags	Incorrect clutch release adjustment	Check and adjust clutch release mechanism as described under "ADJUSTING CLUTCH RELEASE MECHANISM."
	Worn clutch release ramps or worm and lever	Replace release ramps or worm and lever cover. See "INSPECTING CLUTCH RELEASE MECHANISM."
	Excessive clutch spring tension	Check and adjust clutch spring tension as described under "ADJUSTING CLUTCH SPRING TENSION."
	1970: Gummy clutch friction plates	Replace or clean friction plates. See "INSPECTING AND REPAIRING CLUTCH."
	1971: Incorrect oil	Use correct oil for temperature.
	Warped clutch steel plates	Replace clutch steel plates. See "INSPECTING AND REPAIRING CLUTCH."
	Badly worn or damaged clutch sprocket splines	Replace clutch sprocket. See "INSPECTING AND REPAIRING CLUTCH."

1970 CLUTCH CONTROLS

ADJUSTING CLUTCH RELEASE MECHANISM
(Figure 4-1)

Loosen clutch release rod adjusting screw locknut (6) and back off (counterclockwise) clutch release rod adjusting screw (7). Clutch release worm (4) inside transmission sprocket cover (2) should seat against its stop (13) when clutch hand lever is in its fully extended position. If lever does not fully seat, check to see if cable is binding in housing.

Adjust cable length by turning clutch cable adjusting sleeve (hand lever end of cable housing) so that clutch releasing worm does not quite return against its stop. This will hold clutch hand lever in its fully extended position at all times. Turn clutch release rod adjusting screw (7) inward until clutch hand lever has 1/8 of its full movement free before clutch starts to release. This can be checked by a slight increase in tension on the clutch hand lever as it is being moved to the released position. Tighten clutch release rod adjusting screw locknut (6), without disturbing the setting of the adjusting screw.

ADJUSTING CLUTCH SPRING TENSION

CAUTION — On Electric Start XLH Models, remove battery cover and disconnect ground wire from battery (-) terminal to prevent accidental starter operation.

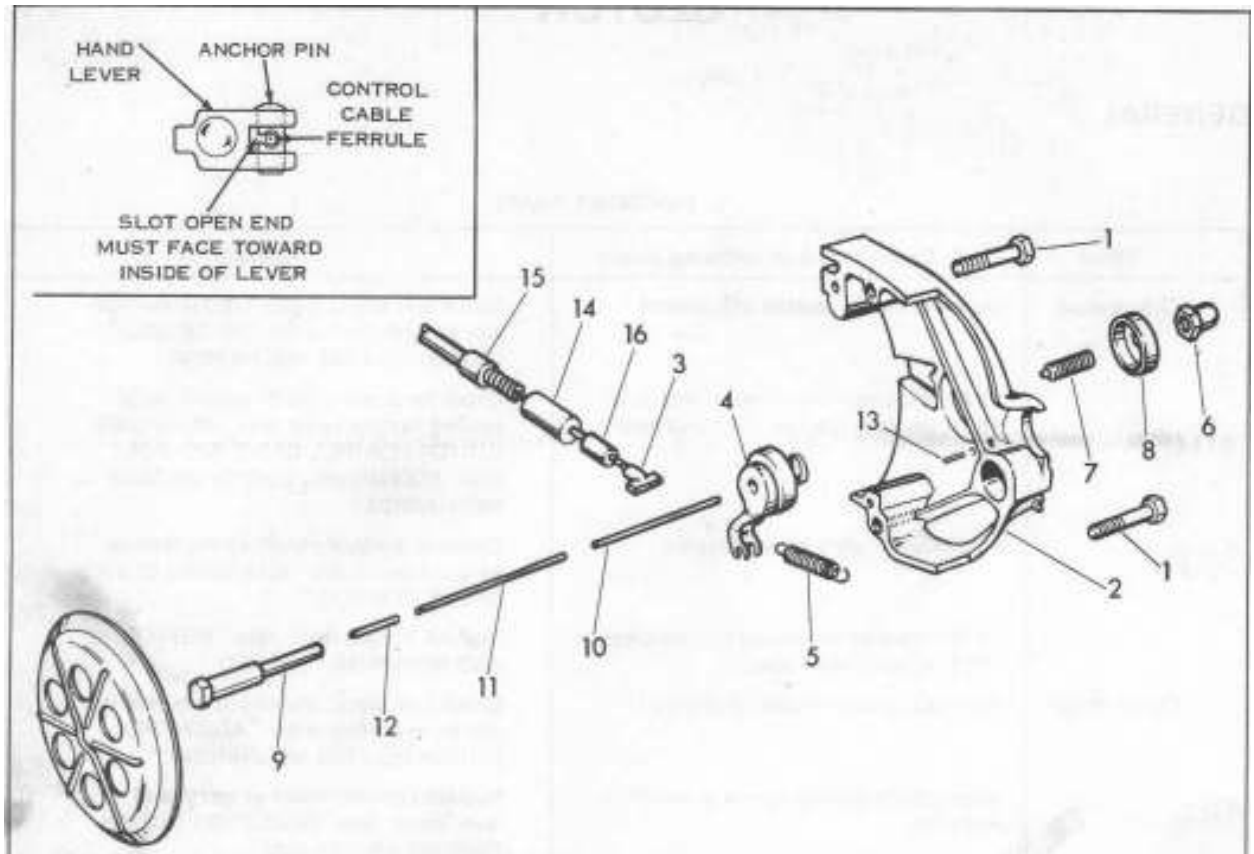

1. Sprocket cover bolt (2)
2. Sprocket cover
3. Control cable end
4. Clutch release worm and lever
5. Clutch release worm and lever spring
6. Clutch adjusting screw locknut
7. Clutch adjusting screw
8. Clutch release worm cover
9. Clutch release rod – left
10. Clutch release rod – right
11. Clutch release rod – right center
12. Clutch release rod – left center
13. Sprocket cover roll pin
14. Clutch cable felt seal retainer
15. Clutch cable ferrule (2)
16. Clutch cable felt seal

Figure 4-1. 1970 Clutch Release Mechanism - Exploded View

See Figure 4-2 and proceed as follows. Remove left footrest (1), and rear brake foot lever (2). Place an oil drain pan under clutch and remove front chain cover screws (3), cover (4) and gasket (not shown).

See Figure 4-7. Remove twelve clutch cover screws (1), six retainers (2), clutch cover (3) and gasket (4).

Loosen cover evenly in several places. Do not pry cover loose at one point as cover may be sprung out of shape and will not be oil-tight when reassembled.

With clutch cover (3) removed, the clutch releasing disc (10), clutch springs (8), spring tension adjusting plate (7) and six spring adjusting nuts are in view. Three of the spring tension adjusting nuts (5) have 7/16 in. hex heads and three nuts (6) have 1/2 in. hex heads. All spring tension adjusting nuts are recessed to conform to raised portion of spring tension adjusting plate which provides a lock for the nuts.

Tighten each of the six nuts one half turn at a time. The nuts must always remain in their locked positions after adjustment is made.

Tightening the spring tension adjusting nuts moves the spring tension adjusting plate (7) closer to the outside surface of the clutch releasing plate (10). The inner surface of the spring tension adjusting plate should measure 3/16 in. from the outer surface of the flange on the clutch spring cups (9) for normal clutch spring tension adjustment. When increasing spring tension, do not diminish above distance to less than 7/64 in. or clutch will not release.

REPLACING CLUTCH CONTROL CABLE AND COIL (Figure 4-1)

Remove starter crank (if used), exhaust pipe and muffler. Remove right front footrest and transmission sprocket cover bolts (1). With a mallet, lightly tap cover (2), at the same time working cover off starter shaft. Loosen adjust-

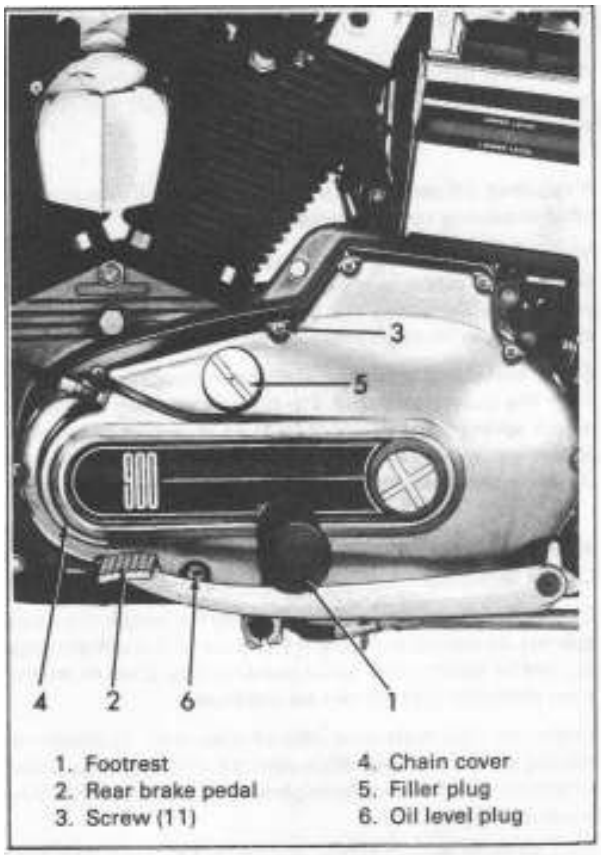

1. Footrest
2. Rear brake pedal
3. Screw (11)
4. Chain cover
5. Filler plug
6. Oil level plug

Figure 4-2. Removing Front Chain Cover

ing screw locknut (6) and adjusting screw (7). Disengage clutch cable end (3) from clutch release worm and lever (4) by moving lever forward (as positioned on motorcycle) until approximately 1 in. of cable remains in gearcase cover. At the same time, press coil in (towards oil pump) and down to free from cover. Loosen clip securing coil to left front frame member and disengage cable from hand lever. Control cable and coil assembly can now be removed from motorcycle.

To remove cable only, first remove sprocket cover from motorcycle and cut off cable end (3). Disengage cable from hand lever and pull out from upper end of coil.

A new control cable coil should be approximately 47-3/4 in. long for sport bars and 51-1/16 in. long for buckhorn bars. Strip approximately 5/8 in. insulated covering from upper coil end, and approximately 1-1/4 in. from lower end before installing upper and lower ferrules (15). To attach rubber control housing oiler, simply strip off approximately 1/4 in. insulated covering, 7 in. from hand lever, and slip oiler in place.

NOTE

Clutch hand lever, control coil and cable are available from the factory completely assembled.

When installing new cable, lubricate cable with grease as it is being inserted in coil (hand lever end). Correctly position upper cable end in hand lever anchor pin. When reassembling cable ferrule in hand lever anchor pin with side slot, be sure slot is toward inside as shown. Earlier type pin with slotted end should have open end facing downward. Insert felt seal retainer (14) and felt seal (16) on lower cable end. Insert cable end (3) on cable, 7-11/16 in. from lower ferrule as shown in Figure 4-1. Cut cable off at end (3). Spread cable strands in cable end countersunk hole and flow a hard solder in hole to securely join together. Engage cable end with fingers of lever. Install sprocket cover (2) with bolts (1). Install footrest, exhaust pipe and muffler and starter crank. Adjust clutch release mechanism as described under "ADJUSTING CLUTCH RELEASE MECHANISM."

DISASSEMBLING CLUTCH RELEASE MECHANISM (Figure 4-1)

Remove sprocket cover and disengage clutch cable end from clutch release worm and lever (4) as described under "REPLACING CLUTCH CONTROL CABLE AND COIL."

To free clutch release worm and lever (4) from sprocket cover, disengage spring (5), remove adjusting screw locknut (6), adjusting screw (7) and clutch release worm cover (8).

If it is necessary to remove clutch release rods, first disassemble clutch parts (1, 2, 3, 4, 5, 6, 7, 8, 9 and 10, Figure 4-7) as described in "1970 CLUTCH 'DISASSEMBLING'." Remove clutch release rod – left (9, Figure 4-1). Drift release rods 10, 11 and 12, from clutch side to sprocket side. Roll pin (13) is a press fit in sprocket cover.

INSPECTING CLUTCH RELEASE MECHANISM (Figure 4-1)

Thoroughly wash clutch release parts in cleaning solvent and blow dry with compressed air.

Examine clutch release worm and lever (4) for wear in sprocket cover. Too much play at this point will reduce clutch release considerably, causing clutch to drag. Replace parts if badly worn.

Inspect the fingers of lever (4), for engagement with clutch control cable end (3). If worn excessively, replace parts.

Replace spring (5) if worn or damaged. New spring length is approximately 1-25/32 in.

Inspect the tips of clutch release rods (9, 10, 11 and 12) for scoring or excessive wear. Damage to release rods is usually caused by excessive clutch spring tension.

ASSEMBLING CLUTCH RELEASE MECHANISM (Figure 4-1)

Assembly is essentially the reverse order of disassembly. Dip ends of release rods in oil. Insert clutch release rod – left (9) in clutch gear end. Slip release rods (12, 11 and 10) in place from sprocket side in order shown (see Figure 4-1). Install clutch parts (10-1, Figure 4-7) as described under "1970 CLUTCH 'DISASSEMBLING'."

Assemble clutch release lever and worm (4), spring (5), cover (8), adjusting screw (7) and locknut (6). Check lever and worm action by moving lever back and forth. Engage cable (3) end with fingers of lever and install sprocket cover (2) with bolts (1). Inject "Grease-All" grease through fitting to lubricate worm.

Check the operation of the release lever to be sure lever returns to stop pin, when clutch hand lever is released. A sticking worm or clutch control cable causes lever to stop short of pin, thus reducing effective clutch release rod travel, causing clutch to slip.

Install footrest, exhaust pipe, muffler and starter crank. Adjust clutch release mechanism as described under "ADJUSTING CLUTCH RELEASE MECHANISM."

1971 AND LATER CLUTCH CONTROLS

GENERAL

Periodic adjustment of the clutch is required every 2000 miles to compensate for lining wear. The need for attention to clutch and controls will also be indicated by the clutch slipping under load, or dragging in released position. In any case, the first thing to be checked is the adjustment of clutch controls.

ADJUSTING CLUTCH RELEASE MECHANISM (Figure 4-3)

1. Loosen control coil adjuster locknut (13) and turn adjuster (15) inward until there is a large amount of free play at hand lever on handlebar.

2. Remove access plug (1) from primary chain compartment cover.

3. Loosen adjusting screw locknut (3) and turn screw (5) inward until it becomes harder to turn (starts to release the clutch) and continue turning (about 2 more turns) to be sure clutch is disengaged.

4. Adjust all free play out of control cable by turning adjuster (15) outward. Do not put any tension on cable. With all slack in cable eliminated (no play at hand lever) tighten the coil adjuster locknut (13). This is the correct cable adjustment.

5. The clutch release adjustment should then be made with the clutch adjusting screw as follows: Loosen the locknut (3) and back off the adjusting screw (5) until the clutch is engaged (screw turns easier), then turn screw inward until the point where free play has just been eliminated. From this point, turn the adjusting screw outward 1/4 to 1/2 turn to establish correct free play, and tighten locknut. Check cable free play at clutch hand lever. Hand lever should have 1/8 in. free play. If incorrect, adjust sleeve and tighten locknut.

If the clutch continues to slip under load or drag in released position, clutch springs may need adjusting or release mechanism may be defective. See subsequent sections.

ADJUSTING CLUTCH SPRING TENSION (1970 TO EARLY 1974 MODELS) (Figure 4-2)

CAUTION — On Electric Start XLH Models, remove battery cover and disconnect ground wire from battery (-) terminal to prevent accidental starter operation.

Remove left footrest (1), and rear brake foot lever (2). Place an oil drain pan under clutch and remove front chain cover screws (3), cover (4) and gasket (not shown).

See Figure 4-8.

With cover removed, the clutch releasing disc (4), six spring tension adjusting nuts (3), stud retainers (2) and retainer nuts (1) are in view.

If required, adjust each of the six nuts one half turn at a time after removing retainer nuts (1) and retainers (2).

Tightening the spring tension adjusting nuts moves the releasing disc closer to the outside surface of the outer drive plate. This increases the clutch spring pressure on the clutch plates through pressure plate studs.

Outer surface of releasing disc should measure 11/32 in. from the outer surface of the outer drive plate for normal clutch spring tension adjustment as shown in Figure 4-8. When increasing spring tension, do not diminish above distance to less than 5/16 in. or clutch may not release.

ADJUSTING CLUTCH SPRING TENSION (LATE 1974 AND LATER MODELS)

Clutch spring tension is determined by the length of six stud spacers as shown in Figure 4-8. To correct clutch slippage caused by worn clutch drive plate linings, a set of shorter than standard spacers can be installed.

Under no circumstances should clearance between releasing disc and outer drive plate be allowed to go under minimum 1/8 in. dimension shown. All spacers should be equal in length.

DISASSEMBLING CLUTCH RELEASE MECHANISM AND CLUTCH CABLE (Figure 4-3)

Remove exhaust system components.

Remove primary chain cover. Remove access plug (1) and O-ring (2) from cover. Remove adjusting screw locknut (3), lockwasher (4) and screw (5). Remove retaining ring (6) using a Tru-arc lock ring pliers. This will free clutch release ramp lever (7) and 3 balls (8). Unless necessary for replacement, do not remove release ramp (9) or washer (10) which is staked into cover recess.

To remove clutch cable, rotate cable coupling 90° from installed position in lever (coupling has a flat which locks it in place in lever). Unhook cable end (12) from coupling (11). Loosen locknut (13) and unscrew adjusting sleeve (15) from cover.

NOTE

Cable and coil (12) with sleeve (15) are available for replacement only as an assembly. Nut (13) and washer (14) are loose parts.

INSPECTING AND REPAIRING CLUTCH RELEASE MECHANISM AND CLUTCH CABLE (Figure 4-3)

Wash clutch releasing parts in clean solvent. Inspect 3 balls (8) and ball socket surfaces of ramps (7) and (9) for wear, pitting or surface breakdown. Check fit of ramp lever (7) hub in ramp (9) and replace both parts if excessive wear exists. To replace ramp (7), pry out old part. Install new ramp against washer (10) and with ear registered in notch of cover boss. Stake cover boss in 3 places to retain ramp in cover. If clutch cable ends are frayed or worn, replace cable.

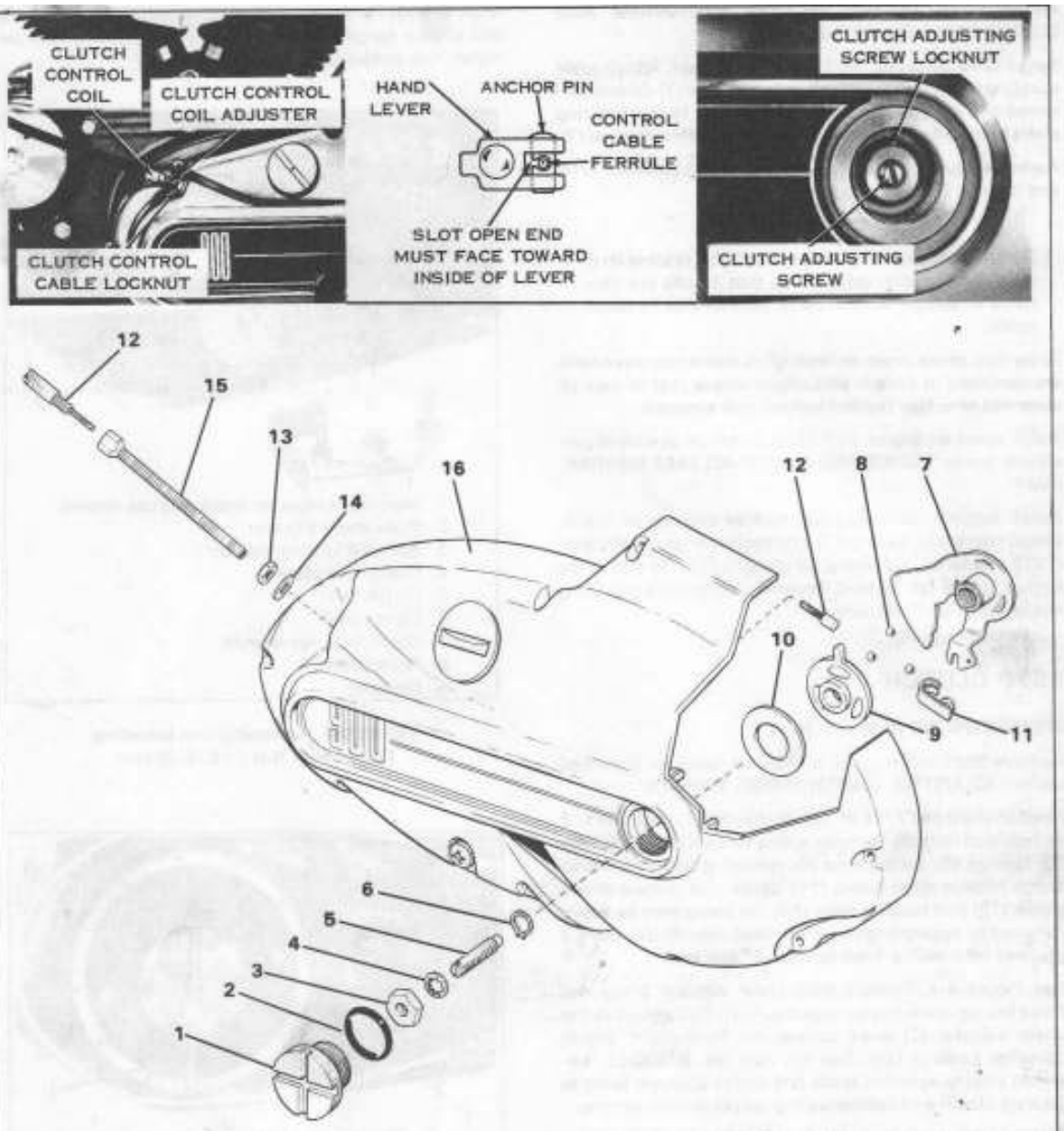

1. Access plug, clutch release adjusting screw
2. O-Ring (1978)
3. Locknut, adjusting screw
4. Lockwasher, adjusting screw
5. Adjusting screw
6. Retaining ring, Tru-arc
7. Release ramp and lever
8. Ball (3)
9. Release ramp
10. Washer
11. Cable coupling
12. Cable and coil assy.
13. Locknut
14. Washer
15. Adjusting sleeve
16. Primary chain case cover

Figure 4-3. 1971 and Later Clutch Release Mechanism - Exploded View

ASSEMBLING CLUTCH RELEASE MECHANISM AND CLUTCH CABLE (Figure 4-3)

Install cable parts (15, 14, 13 and 12) in cover. Attach cable coupling (11) to cable end and install in lever (7). Grease ball ramps and install ramp parts (10, 9, 8 and 7). Use lock ring pliers to install retaining ring (6) in groove of ramp lever (7).

Assemble clutch release adjusting screw (5), lockwasher (4) and locknut (3) in cover.

IMPORTANT

Before installing cover on engine clutch, release lever must be correctly adjusted so that 3 balls are centered at bottom of each ramp with no play in clutch cable.

To do this, press down on lever (7) to feel when three balls are centered in ramps, and adjust sleeve (15) to take all slack out of cable. Tighten locknut (13) securely.

Install cover on engine and adjust clutch as described previously under "ADJUSTING CLUTCH RELEASE MECHANISM."

Install footrest, exhaust pipe, muffler and starter crank. Install rear brake lever (1974 and earlier) or gear shift lever (1975 and later), tightening pinch bolts to 90 to 100 in-lbs torque. Install left footrest assembly, tightening mounting nut to 50 to 60 ft-lbs torque.

1970 CLUTCH

DISASSEMBLING (Figure 4-7)

Remove front chain cover and clutch cover as described under "ADJUSTING CLUTCH SPRING TENSION."

Remove the three 7/16 in. hub stud nuts (5), and three 1/2 in. hub stud nuts (6). Remove spring tension adjusting plate (7), springs (8), spring cups (9), releasing disc (10), seven clutch friction drive plates (11), seven clutch steel driven plates (12) and backing plate (13). All plates may be easily removed by tipping engine, or removed individually, using a piece of wire with a hook formed on one end.

See Figure 4-4. Remove front chain adjuster brace and three front chain adjuster capscrews (1). This will leave the chain adjuster (2) loose behind the front chain. Install Sprocket Locking Link Tool (3), Part No. 97200-55, between engine sprocket teeth and clutch sprocket teeth to prevent clutch and compensating sprocket from turning.

Insert Clutch Lock Plate (4), Part No. 97175-55, between clutch hub (5) and sprocket (6) as shown in Figure 4-4. Bend ears of lockwasher (15, Figure 4-7) away from hub nut and remove release rod – left (9, Figure 4-1). Remove clutch hub nut (14, Figure 4-7) using Wrench (7), Part No. 94647-52.

Pry hub nut lockwasher from hub and discard. Pry oil seal (27, Figure 4-7) from clutch gear end with screwdriver or release rod end that has been wiped dry. Install clutch Hub Puller (1, Figure 4-5), Part No. 95960-52, and remove clutch hub (16) from splines of clutch gear as shown in Figure 4-5. Remove O-ring (18) from groove in clutch gear (28).

Using Compensating Sprocket Shaft Wrench (2, Figure 4-5), Part No. 94557-55, remove shaft nut as shown in Figure 4-5, and in one move, free clutch shell (6), front chain (8) and engine sprocket (9) as shown in Figure 4-4. Remove clutch hub spacer (20).

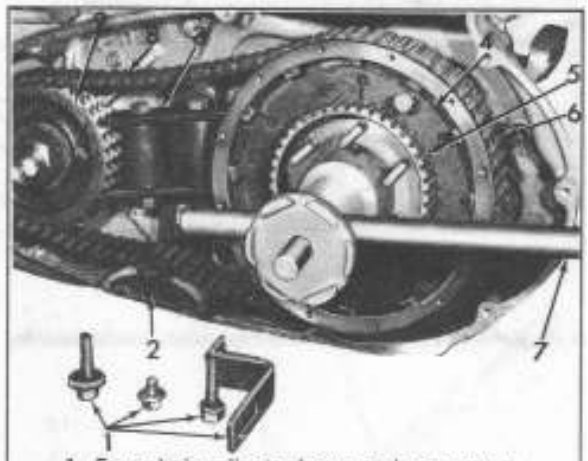

1. Free chain adjuster brace and cap screws
2. Front chain adjuster
3. Sprocket locking link tool
4. Clutch lock plate
5. Clutch hub
6. Clutch shell
7. Clutch hub nut wrench
8. Front chain
9. Sprocket

Figure 4-4. Removing and Installing Clutch Hub Nut - 1976 Shown

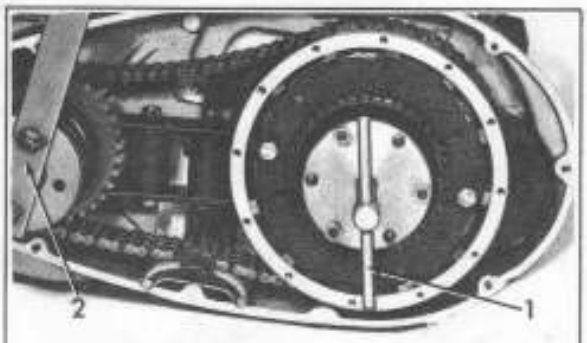

1. Clutch hub puller
2. Compensating sprocket shaft wrench

Figure 4-5. Removing Clutch Hub Removing and Installing Compensating Sprocket

INSPECTING AND REPAIRING (Figure 4-7)

Carefully examine clutch cover (3) sealing surface for scratches, distortion or any damage that might result in oil leakage to clutch. Discard gasket (4) and replace with a new one when reassembling clutch.

Figure 4-6. Installing Clutch Hub

Inspect clutch springs (8) for damage or collapsed condition. Spring damage usually results from excessive heat. Free length of a new spring is approximately 1-5/8 in. Any that check below this limit should be replaced.

Examine the clutch release disc (10), for excessive wear, grooving or scoring on running surface. Replace if necessary.

Pay particular attention to the seven clutch friction drive plates (11). Plates that are badly worn, grooved, scored or oil soaked, should be replaced. Plates in relatively good condition, can be cleaned and sanded down with a medium grade sandpaper and reused. Do not reuse plates that have been saturated with oil.

Examine the seven clutch driven plates (12) for excessive wear and damage. Plates that are badly worn, grooved, warped, burned or scored should be replaced. Plates that have turned blue from heat only, and are smooth and generally in good condition, can be used again after being thoroughly cleaned.

When reassembling, always replace lockwasher (15) to ensure an oil tight seal between clutch hub and end of clutch gear.

Inspect clutch hub spacer (20) for appreciable shake or play in needle bearings (21). Check for wear in bearing path of inner race and examine needle roller bearings. If bearings are worn, scored or damaged, replacement of part is necessary. Spacer is a slip fit in clutch shell. To replace bearings, see "REPLACING CLUTCH SHELL NEEDLE BEARING AND STARTER CLUTCH."

Oil seal (17) is a press fit and can by pryed from clutch sprocket. Be very careful not to damage seal during removal operation. Expand rubber exterior of seal and carefully check for hair line cracks in seal surface. If any wear or damage is evident, replace seal to ensure an oil tight closure between clutch sprocket and clutch hub.

Inspect clutch shell (19) for badly worn or loose keys, loose rivets, worn sprocket teeth, damaged ring gear teeth marred or damaged cover sealing surface. If noticeably damaged, replacement clutch shell is recommended. However, if a rivet is loose with no other apparent damage, a new rivet can be installed. On starter clutch side, set rivets until flush to .010 in. (maximum) above face of starter clutch. Seal new rivets on both sides using a solvent proof sealer.

Check starter clutch (23) teeth. If badly worn or damaged replace part as described in "REPLACING CLUTCH SPROCKET NEEDLE BEARING AND STARTER CLUTCH."

Examine clutch gear oil seal (27) for wear or damage by expanding seal surface and carefully checking for hair line cracks. If any wear or damage is evident, replace seal to ensure oil tight closure between end of clutch gear and release rod – left.

Replace clutch hub rubber O-ring (18) if worn or damaged.

REPLACING CLUTCH SPROCKET NEEDLE BEARING AND STARTER CLUTCH (Figure 4-7)

To remove clutch sprocket needle bearings (21), washers (24 and 25) and starter clutch (23), remove oil seal (17) and rivets (22) from sprocket. Needle roller bearings (21) and roll pin (26) are press fit.

To reassemble clutch sprocket, press needle roller bearings in place pressing on printed side of bearings only. Press first bearing in to a depth of .010 to .015 in. measuring from clutch shell to inner face of bearing. Then press other bearing flush against first bearing from starter clutch side.

Roll pin (26) correctly positioned, should extend .08 in. from sprocket face to top of pin. Position washer (25) on roll pin. Temporarily select and insert variable sized washer (24) in clutch sprocket. Washers are available in several sizes of .002 in. thickness difference. Lay starter clutch (23) on back plate held down under pressure, insert feeler gauge and measure clearance between variable size washer and starter clutch. Select and try different variable size washers until .001 to .004 in. clearance is obtained.

NOTE

Allow approximately .001 in. for pull of rivets.

When correct clearance between washer and starter clutch is obtained, feed rivets into countersunk holes from inside of sprocket shell. Head rivets until flush to .010 in. maximum above face of starter clutch. Seal rivets on both sides using a solvent proof sealer.

With lip facing in, press oil seal (17) into clutch shell.

ASSEMBLING CLUTCH (Figure 4-7)

Assembly is essentially the reverse order of disassembly. Be certain that all parts are clean, free of oil and dry before reassembling.

Install oil seal (27). Do not forget to insert clutch release rod – left (9, Figure 4-1). Apply a light coat of grease to needle roller bearings, and compensating sprocket shaft extension and install spacer (20) and O-ring (18) on clutch gear. Assemble clutch sprocket, front chain and compensating sprocket in one move. Be sure chain adjuster is positioned loose behind chain. Reassemble compensating sprocket as described under "ASSEMBLING COMPENSATING SPROCKET."

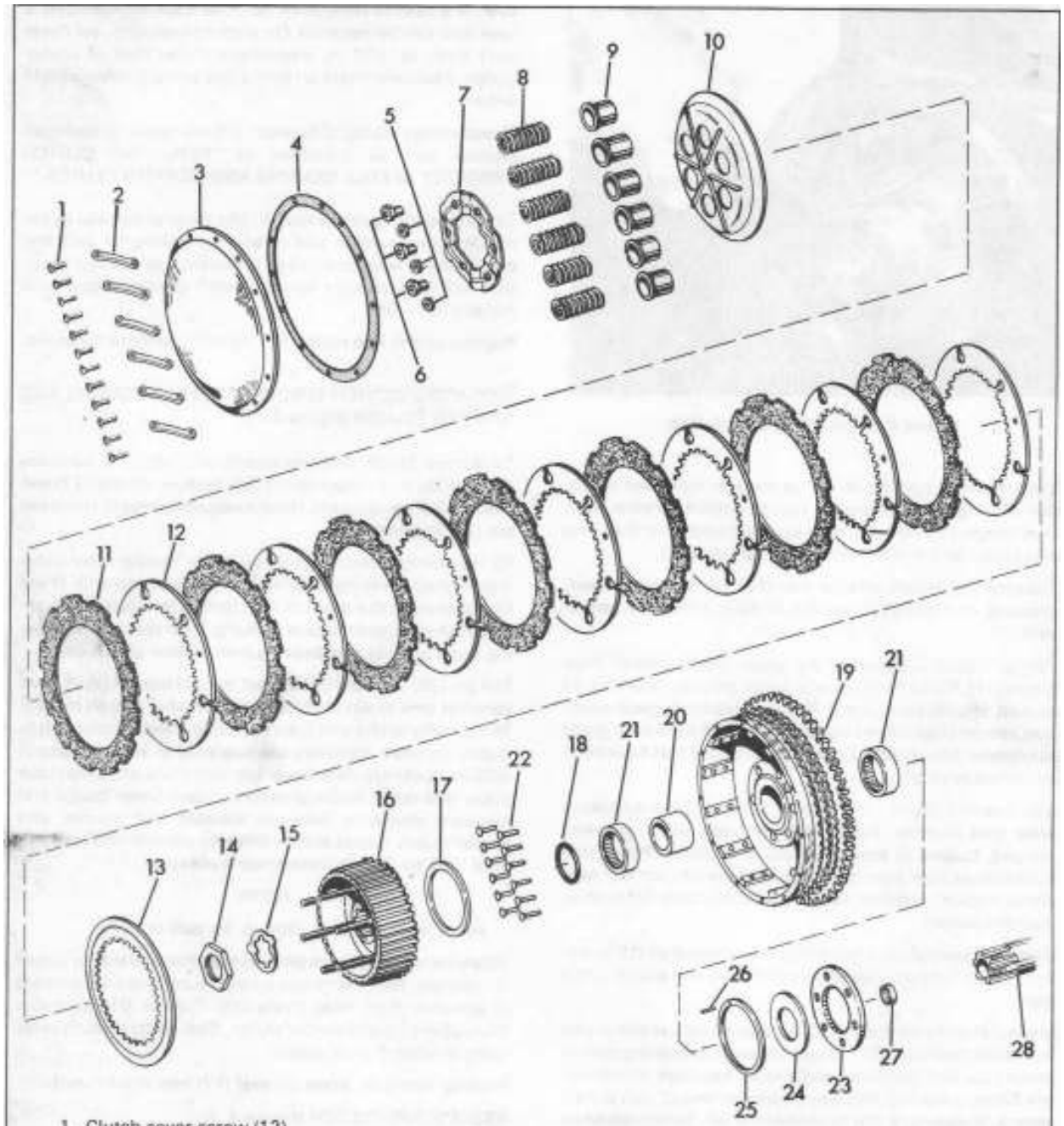

1. Clutch cover screw (12)
2. Clutch cover screw retainer (6)
3. Clutch cover
4. Clutch cover gasket
5. Hub stud nut (3)
6. Hub stud nut – long (3)
7. Pressure plate
8. Clutch spring (6)
9. Backing plate cup (6)
10. Releasing disc
11. Friction drive plate (7)
12. Driven plate (7)
13. Backing plate
14. Hub nut
15. Hub nut lockwasher
16. Clutch hub assembly
17. Clutch hub oil seal
18. Clutch hub O-ring
19. Clutch shell
20. Clutch hub spacer
21. Needle bearing
22. Sprocket rivet (12)
23. Starter clutch
24. Sprocket bearing washer (variable-size)
25. Sprocket hub washer
26. Sprocket hub washer pin
27. Clutch gear (push rod) oil seal
28. Clutch gear

Figure 4-7. 1970 Clutch - Exploded View

Install clutch hub on clutch gear splines using Clutch Hub Installing Tool, Part No. 97170-55A, as shown in Figure 4-6. Install Lock Plate, Part No. 97175-55, and Sprocket Locking Link Tool, Part No. 97200-55, as shown in Figure 4-4.

Install a new lockwasher (15) over clutch gear splines and install hub nut (14, Figure 4-7) using Wrench, Part No. 94647-52, as shown in Figure 4-4. Follow up hand tightening by striking wrench handle with a soft mallet to securely seat nut to at least 150 ft-lbs torque. Bend ear of washer (15) against hex head of hub nut. Clutch hub must run free on shaft after tightening.

IMPORTANT

If starter clutch, clutch shell or clutch gear have been replaced, it is obviously necessary to check the clearance between teeth on starter clutch gear and starter clutch as described in "STARTER."

Tighten and adjust front chain tensioner as described under "FRONT CHAIN ADJUSTMENT," Section 2.

See Figure 4-7. Remove locking tools and install backing plate (13) over clutch hub splines, against back side of hub, recessed side facing out.

Place a steel plate (12) next to the recessed plate (13). Place a friction plate (11) into clutch shell and sprocket assembly and push inward against the second metal plate. Alternate with steel plates and friction plates until seven friction plates are in position. This will leave a friction plate on the outside. Make sure all plates have free movement.

Install releasing plate (10) on clutch hub (16) so the clutch hub studs are exactly centered in the clutch spring cup holes. Do this by aligning the larger of the two depressions on the rim of the clutch releasing plate with the notched tooth of the clutch hub.

Install clutch spring cups (9), springs (8) and spring tension adjusting plate (7) into position with the raised surface facing outward. Start three 1/2 in. hub stud (long) nuts (6) on their respective studs. Pull these nuts down evenly until the spring tension adjusting plate is pulled over the remaining three studs a sufficient distance to allow starting the 7/16 in. hex head nuts (5). Draw the six spring tension adjusting nuts down evenly until the inside of the spring tension adjusting plate (7) measures 3/16 in. out from the outside surface of flange of the clutch spring cups (9) at the 6 stud locations. This is proper clutch spring tension adjustment when new clutch plates are used. Install clutch shell and sprocket cover (3), screws (1) and retainers (2), with new gasket (4). Install gasket without sealer, graphite side facing cover. Very lightly stake retainer (2) to lock screw (1).

CAUTION — A heavy blow is very likely to distort cover, disjoining the seal.

See Figure 4-2. Install chain cover (4) and screws (3) with new gasket. If necessary, use gasket seal on both sides of gasket. Assemble rear brake pedal (2), and footrest (1).

With motorcycle standing straight up, remove oil filler plug (5) and oil level plug (6). Add oil through filler plug, (same grade of oil used in engine), until it begins to overflow through oil level hole. Allow excess oil to flow from hole (6) until it ceases to run. This is correct oil level. Reassemble oil level and filler plugs.

1971 AND LATER CLUTCH

DISASSEMBLING (Figure 4-9)

Remove front chain cover as described under "ADJUSTING CLUTCH SPRING TENSION."

Remove hex head retainer nuts (1) and retainers (2 or 2A) (if used). Install Clutch Spring Compressing Tool, Part No. 97178-71, on crankcase by screwing into the crankcase cover screw holes shown in Figure 4-10. Compress releasing disc (4 or 4A) with tool to take pressure off nuts (3) and remove nuts. Back off center screw of tool and remove releasing disc (4 or 4A) and spring (7 and 8). Remove tool. Remove retaining ring (9) from groove in clutch shell (17). All clutch plates (11 or 11A and 12), outer drive plate (10) and pressure plate (13) and stud spacers (4B) (if used) will come out as a unit by pulling on pressure plate studs.

See Figure 4-11. Remove front chain adjuster brace and three front chain adjuster capscrews (1). This will leave the chain adjuster (2) loose behind the front chain. Install Sprocket Locking Link Tool (3), Part No. 97200-55, between engine sprocket teeth and clutch sprocket teeth to prevent clutch and compensating sprocket from turning.

Insert Clutch Lock Plate (4), Part No. 97173-71, between clutch hub (5) and sprocket (6) as shown in Figure 4-11. Bend ears of lockwasher (15, Figure 4-9) away from hub nut. Remove clutch hub nut (14), using Wrench (7), Part No. 94647-52 (see Figure 4-11).

Remove clutch hub (16) from splines of clutch gear. If necessary, use Puller, Part No. 95960-52A and two 1/4-20 x 4 in. long Screws, Part No. 5422B.

Using Compensating Sprocket Shaft Wrench (9, Figure 4-11), Part No. 94557-55, remove shaft nut as shown in Figure 4-11, and in one move, free clutch shell, front chain and engine sprocket.

INSPECTING AND REPAIRING (Figure 4-9)

Inspect clutch springs (7 and 8) for damage or collapsed condition. Spring damage usually results from excessive heat. Free length of a new inner spring is approximately 2-5/16 in., 1970-71 outer spring free length is approximately 1-3/4 in., 1972 and later outer spring free length is approximately 2-1/2 in. Any that check below this limit should be replaced.

Examine the 8 clutch steel discs (11 or 11A) for warpage and excessive wear, grooving or scoring on running surface. Replace if necessary.

Pay particular attention to the 8 clutch friction drive plates (12). Plates that have badly worn, grooved or scored or burned friction surfaces should be replaced. If oil grooves are worn away, replace the friction plates.

Steel plates that have turned blue from heat only, and are smooth and generally in good condition, can be used again after being thoroughly cleaned.

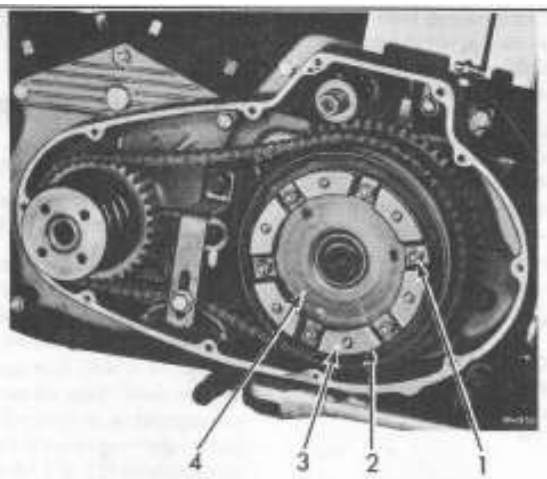

1. Retainer nut (6)
2. Retainer (6)
3. Adjusting nut (beneath retainer) (6)
4. Clutch releasing disc

1971 to early 1974 clutch

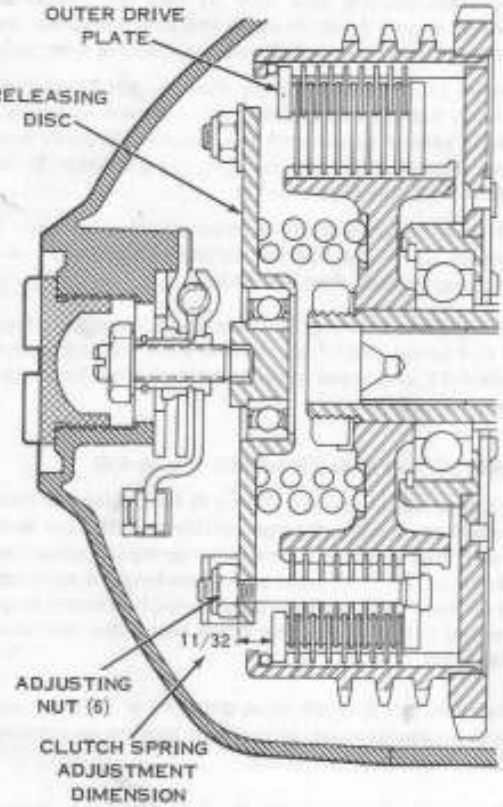

1971 to early 1974 clutch

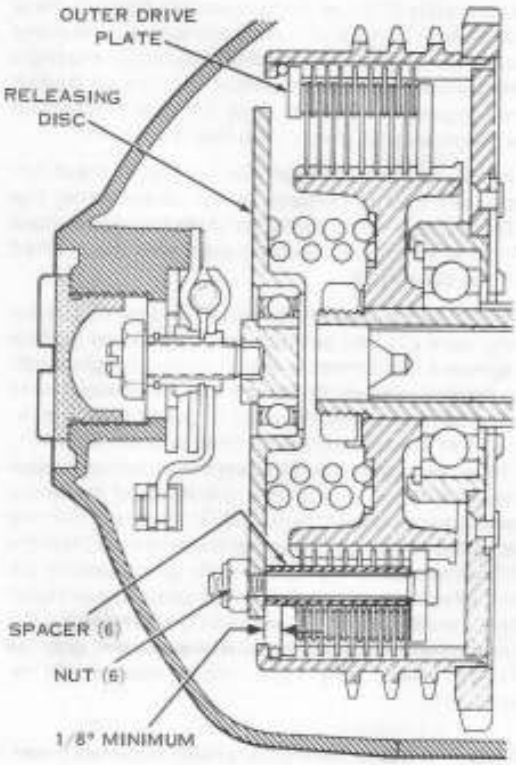

Spacer std. length 1.530 in.
Spacer – .040 length 1.490 in.
Spacer – .080 length 1.450 in.

Late 1974 and later clutch

Figure 4-8. 1971 and Later Clutch

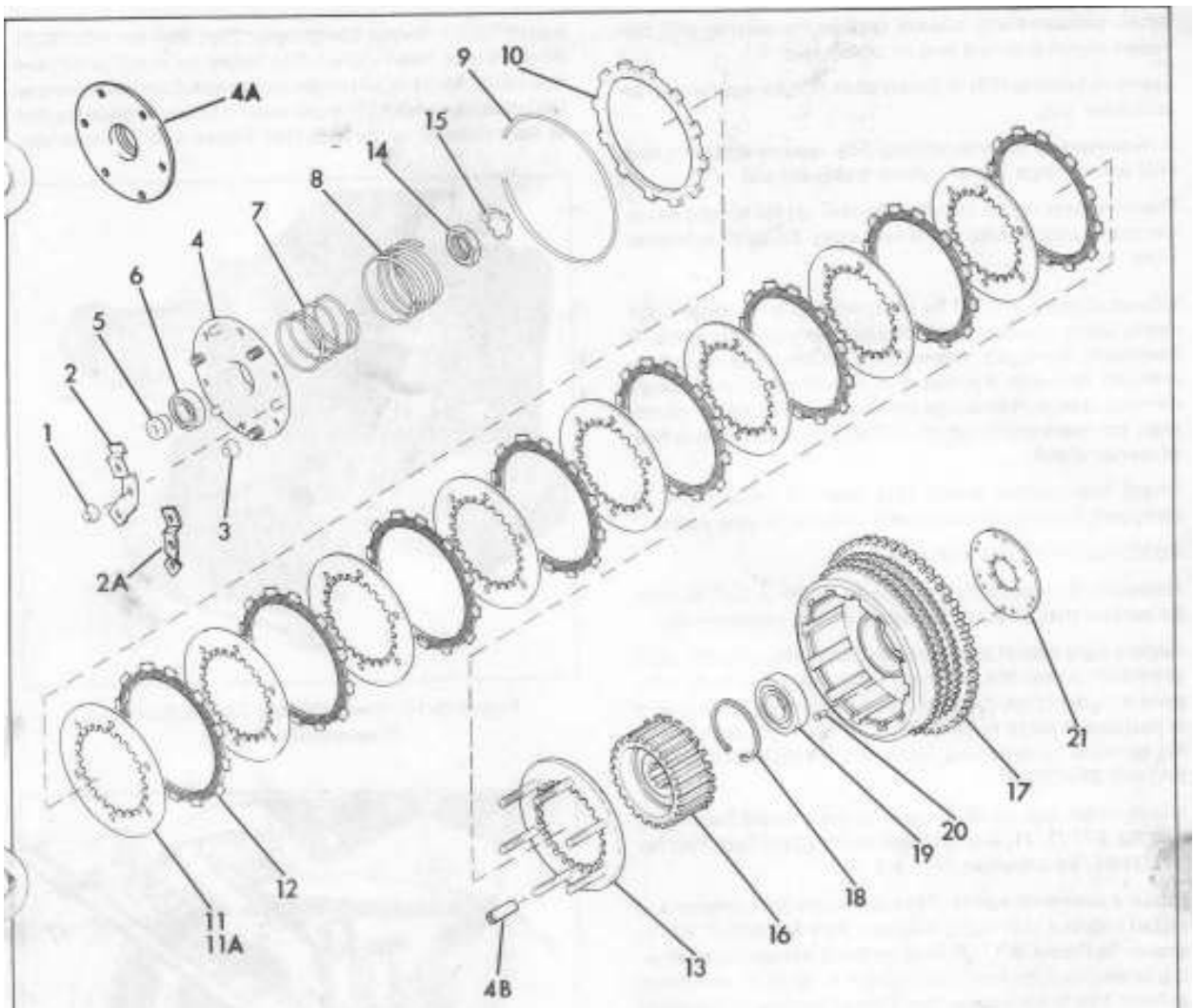

1. Nut, retainer (3) (Early 1971) (6) (Late 1971 to early 1974)
2. Retainer (3) (Early 1971)
2A. Retainer (6) (Late 1971 to early 1974)
3. Nut, pressure plate (6)
4. Releasing disc (1971 to early 1974)
4A. Releasing disc (Late 1974 and later)
4B. Stud spacer (6) (Late 1974 and later)
5. Releasing disc collar
6. Releasing disc bearing
7. Spring, inner
8. Spring, outer
9. Retaining ring, outer drive plate
10. Outer drive plate
11. Driven plate (8) (1971 to early 1974)
11A. Driven plate (8) (Late 1974 and later)
12. Drive plate (8)
13. Pressure plate
14. Hub nut
15. Hub nut lockwasher
16. Clutch hub assy.
17. Clutch shell
18. Retaining ring, clutch shell bearing
19. Bearing, clutch shell
20. Rivet, starter clutch (12)
21. Starter clutch

Figure 4-9. 1971 and Later Clutch – Exploded View

When reassembling, always replace lockwasher (15) between clutch hub and end of clutch gear.

Examine bearing (19) in clutch shell (17) for roughness, or excessive play.

If necessary to replace bearing (19), remove retaining ring (18) with a large Tru-arc pliers and press out.

Examine bearing (6) in releasing disc (4) for roughness or excessive play and replace if necessary. Collar (5) can be reused.

Inspect clutch shell (17) for badly worn or loose keys, loose rivets, worn sprocket teeth or damaged ring gear teeth. If noticeably damaged, replacement clutch shell is recommended. However, if a rivet is loose with no other apparent damage, a new rivet can be installed. On kick starter clutch side, set rivets until flush to .010 in. (maximum) above face of starter clutch.

Check kick starter clutch (21) teeth. If badly worn or damaged, replace drill out rivets and install new parts.

ASSEMBLING CLUTCH (Figure 4-9)

Assembly is essentially the reverse order of disassembly. Be certain that all parts are clean before reassembling.

Apply a light coat of grease to compensating sprocket shaft extension. Assemble clutch sprocket, front chain and compensating sprocket in one operation. Be sure chain adjuster is positioned loose behind chain. Reassemble compensating sprocket as described under "ASSEMBLING COMPENSATING SPROCKET."

Install clutch hub on clutch gear splines. Install Lock Plate, Part No. 97173-71, and Sprocket Locking Link Tool, Part No. 97200-55, as shown in Figure 4-11.

Install a new lockwasher (15) over clutch gear splines and install hub nut (14) using Wrench, Part No. 94647-52, as shown in Figure 4-11. Follow up hand tightening by striking wrench handle with a soft mallet to securely seat nut to at least 150 ft-lbs torque. Bend ear of washer (15) against hex head of hub nut. Clutch hub must run free on shaft after tightening.

IMPORTANT

If starter clutch, clutch shell or clutch gear have been replaced on XLCH Model, it is absolutely necesary to check the clearance between teeth on starter ratchet gear and starter clutch as described in "STARTER."

Tighten and adjust front chain tensioner as described under "FRONT CHAIN ADJUSTING," Section 2.

See Figure 4-9. Remove locking tools and install pressure plate (13) over clutch hub splines, against back side of hub, studs side facing out. Install stud spacers (4B) on studs (late 1974 and later).

Place a friction plate (12) next to the pressure plate (13). Place a steel plate (11 or 11A) over studs into clutch shell and sprocket assembly and push inward against the friction plate. Alternate with steel plates and friction plates until 8 of each are in position. This will leave a steel plate on the outside. Install outer drive plate (10) and install retaining ring (9) in clutch shell groove. Make sure all plates have free movement.

Install Clutch Spring Compressor Tool, Part No. 97178-71 on crankcase (see Figure 4-10). Install springs (7 and 8) and releasing disc (4 or 4A) under tool screw. Compress parts so that pressure plate (13) studs enter 6 holes in releasing disc to start nuts (3) on threads (see Figure 4-8). Remove tool.

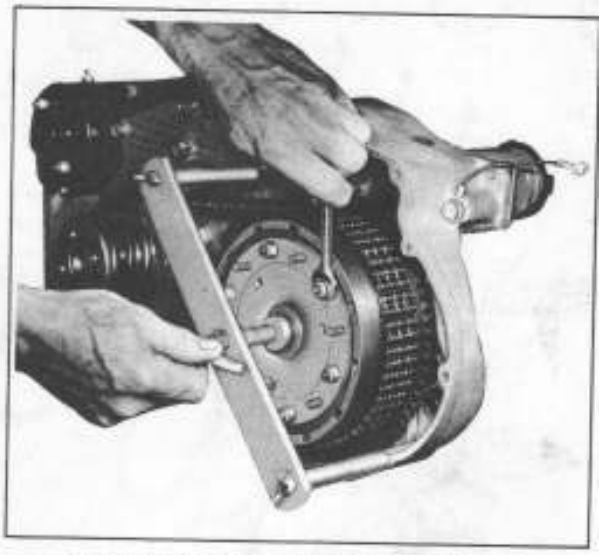

Figure 4-10. Compressing Clutch Spring to Disassemble Clutch

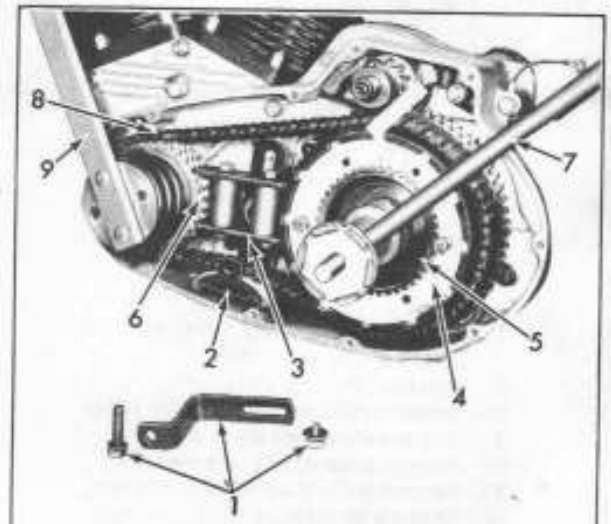

1. Front chain adjusting brace and capscrews
2. Front chain adjuster
3. Sprocket locking link tool
4. Clutch lock plate
5. Clutch hub
6. Sprocket
7. Wrench
8. Front chain
9. Compensating sprocket shaft wrench

Figure 4-11. Removing and Installing Clutch Hub Nut and Compensating Sprocket Nut

On 1970 to early 1974 models, adjust clutch spring tension as described previously under "ADJUSTING CLUTCH SPRING TENSION."

On 1974 and later models, install retainers (2) and nuts (1) and tighten securely.

Install primary chain cover using new gasket, using correct length screws in proper holes. Install rear brake foot lever and left footrest.

Adjust clutch release screw as described previously under "ADJUSTING CLUTCH RELEASE SCREW."

With motorcycle standing straight up, (see Figure 4-2) remove oil filler plug (5) and oil level plug (6). Add oil through filler plug, (same grade of oil used in engine), until it begins to overflow through oil level hole. Allow excess oil to flow from hole (6) until it ceases to run. This is correct oil level. Reassemble oil level and filler plugs.

COMPENSATING SPROCKET (1976 AND EARLIER)

REMOVING (Figure 4-12)

Loosen clutch sprocket and front chain as described in "DISASSEMBLING CLUTCH." Then remove compensating sprocket shaft nut (1), using Shaft Nut Wrench, Part No. 94557-55, as shown in Figure 4-11. Remove spring (2), sliding cam sleeve (3), sliding cam (4), sprocket (5), front chain and clutch shell together. Use Sprocket Shaft Extension Puller, Part No. 96015-56, to remove extension (6) from sprocket shaft if necessary (see Figure 4-13).

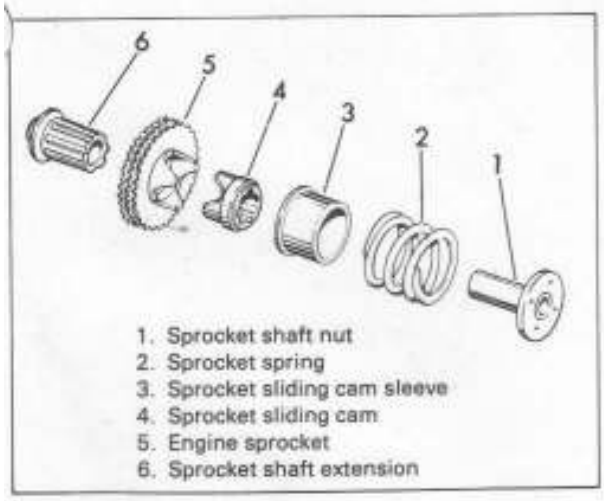

Figure 4-12. Compensating Sprocket - Exploded View

Figure 4-13. Removing Sprocket Shaft Extension

INSPECTING (Figure 4-12)

Wash all parts in cleaning solvent and blow dry with compressed air. Carefully examine sprocket teeth, shaft splines and sliding cam surfaces for wear or scoring. Replace any parts that show excessive wear or damage.

NOTE

Extension (6) and cam (4) are matched at the factory according to spline engagement therefore, they must be used as a set only.

A collapsed or damaged spring (2), will be evident by very turbulent cam action. If this condition exists, install a new spring.

INSTALLING (Figure 4-12)

Install sprocket shaft extension (6) on end of sprocket shaft, using Tool Set, Part No. 97081-54, as described in "ASSEMBLING CRANKCASE," Section 3.

Apply a light coat of grease to shaft extension splines and assemble sprocket (5) front chain and clutch shell together. See "ASSEMBLING CLUTCH."

Install sliding cam (4) on extension (6), being very careful to correctly match like splines to ensure free movement of cam on extension. Assemble parts (3, 2 and 1). Tighten sprocket shaft nut (1) securely, using Compensating Sprocket Shaft Wrench, Part No. 94557-55. (See item 9, Figure 4-11).

KICK STARTER

GENERAL

The kick starter is designed for rugged service and will seldom require attention. However, if any irregularity should develop it is of utmost importance the engine be turned off and starter mechanism serviced immediately.

See Figure 4-14. A service problem will be indicated by starter ratchet gear ratcheting (clicking) with engine running, and starter crank upright as positioned on motorcycle. Ratcheting is caused by the starter ratchet gear (6) teeth making partial contact with starter ratchet (18) teeth, as the result of either a loose starter shaft nut (9), excessive crank shaft (11) end play or a loose starter crank gear cam plate (20).

If the kick starter crank (2) slips or partially engages when crank is rotated through its cycle, check for badly worn starter ratchet teeth (18 and 6), damaged spring (8) or ratchet gear (6) binding on spacer (7).

DISASSEMBLING (Figure 4-14)

Remove starter crank clamp bolt (1), crank (2) from shaft. Press down on end of starter spring (3) and at the same time pry spring off shaft (11). Loosen exhaust pipe and muffler.

Remove right footrest.

Remove transmission sprocket cover screws (4). With a mallet lightly tap cover (5), at the same time pulling cover from shaft.

Remove clutch as described in "DISASSEMBLING CLUTCH."

Rotate kick starter crank gear (12) to free starter ratchet gear (6), spacer (7) and spring (8). Remove crank nut (9) and lockwasher (10). Tap end of kick starter crankshaft (11) with a soft mallet to loosen from gear (12). Remove crankshaft (11), oil seal (13), shims (14), if used, and thrust plate (15).

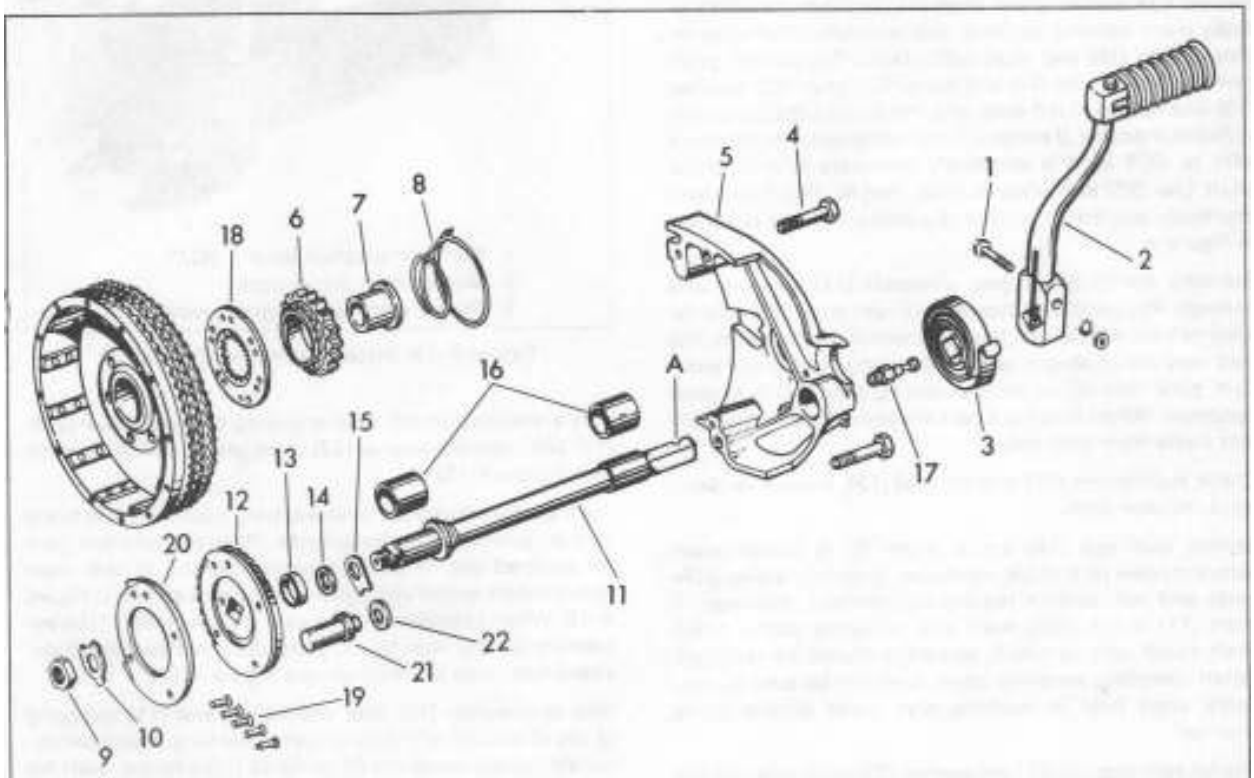

1. Crank clamp bolt, lockwasher and nut
2. Crank and pedal assembly
3. Crank spring
4. Sprocket cover bolt (2)
5. Sprocket cover
6. Starter ratchet gear
7. Clutch sprocket spacer (available in various lengths)
8. Ratchet gear spring
9. Shaft nut
10. Crank gear lockwasher
11. Crankshaft
12. Crank gear
13. Crank oil seal
14. Crankshaft shim – .007"
15. Shaft thrust plate
16. Shaft bushing (2)
17. Spring stud
18. Starter ratchet
19. Crank gear cam plate rivet (5)
20. Crank gear cam plate
21. Crank gear stop pin
22. Crank gear stop pin washer

Figure 4-14. Kick Starter – Exploded View

NOTE

Shims (14) are only used to establish correct crankshaft end play when crankshaft and thrust washer are worn.

INSPECTING AND REPAIRING (Figure 4-14)

Clean all parts in cleaning solvent and blow dry with compressed air.

Inspect and replace starter ratchet gear and starter ratchet (6 and 18), if necessary. Especially check for badly worn or damaged ratchet teeth that may cause partial or no engagement of ratchet (18) and gear (6). To replace starter ratchet (18), see "REPLACING CLUTCH SPROCKET NEEDLE BEARING AND STARTER RATCHET," Section 4. Examine gear (6) bushing face for burred or damaged condition affecting free movement of gear on spacer (7). Recheck for binding by assembling gear on spacer and note action of two parts.

Examine starter ratchet gear spring (8) for collapsed condition or breakage, and compare with new spring, if possible. New spring free length is approximately 1 in.

Inspect kick starter crank shaft (11) for bent condition or badly worn bearing surfaces and particularly for wear on thrust plate (15) and shaft collar faces. Temporarily position shaft (11), seal (13) and plate (15), gear (12), washer (10) and nut (9) in left case and check crankshaft end play with dial indicator. If end play is not within specified limits of .001 to .007 in. it is absolutely necessary to shim crank shaft. Use .007 in. thickness Shim, Part No. 6802, between crankcase and thrust washer to obtain correct fit as shown in Figure 4-15.

Examine starter crank gear assembly (12) for wear and damage. Pay particular attention to cam plate (20) ears for wear or bent condition. Check for loose cam plate rivets (19) that may result in cam plate separating from crank gear. Cam plate may be replaced providing gear (12) is in good condition. When riveting new cam plate to crank gear, insert rivets from gear side.

Check lockwasher (10) and oil seal (13), if worn or damaged, replace parts.

Bronze bushings (16) are a press fit in transmission sprocket cover (5) and left crankcase. Bushings are long life parts and will seldom require replacement, however, if shaft (11) is not badly worn and excessive starter crank shaft radial play is noted, bushings should be replaced. When installing sprocket cover bushing be sure to correctly align hole in bushing with cover grease fitting channel.

Starter gear stop pin (21) and washer (22) ordinarily will not require replacement, and it is recommended procedure to inspect and replace stop pin only with engine removed from chassis. Stop pin is a press fit in crankcase. Washer is locked in place by peening stop pin end.

ASSEMBLING (Figure 4-14)

Install oil seal (13) in left crankcase. Insert crankshaft through hole in motor mount. Slip thrust plate (15) on starter crankshaft (11), flat side of plate up as positioned on motorcycle. Insert steel shims (14) on crankshaft if needed, as described under "INSPECTION AND REPAIR," and in-

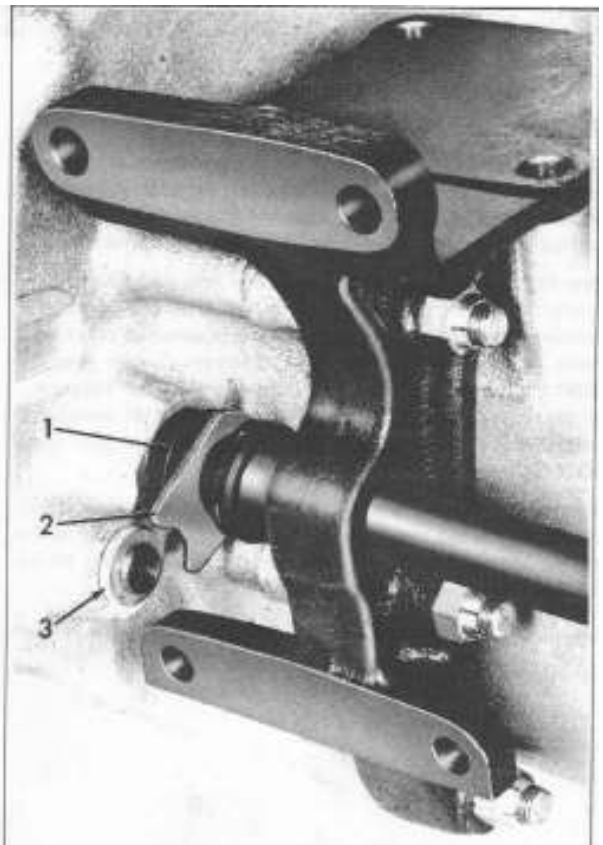

1. Starter crankshaft shim – .007"
2. Starter shaft thrust plate
3. Starter crank gear stop pin washer

Figure 4-15. Installing Starter Crankshaft

stall crankshaft in left case engaging notched thrust plate (15) with stop pin washer (22) using grease to hold in place (see Figure 4-15).

Turn starter crankshaft until notch (A, Figure 4-14) is to the rear as positioned on motorcycle. Place starter crank gear on squared end of shaft, recessed portion of cam plate facing down, end of slot against stop pin as shown in Figure 4-16. When positioning crank gear (12) on shaft (11) be extremely careful that thrust plate does not become dislocated from stop pin washer (see Figure 4-15).

Slip lockwasher (10) over crankshaft end (11) engaging prong of washer with hole in crank gear face. Install and securely tighten crank nut (9) to 40-45 ft-lbs torque, with flat side of nut against washer.

Slip starter ratchet gear (6) over spacer (7), grooved side of gear bushing against lip of spacer collar. Position small end of spring (8) in clutch gear bushing groove.

Place starter ratchet gear assembly on ratchet gear, compressing spring (8) and at the same time turning starter crank gear to permit meshing of gear teeth.

Return starter crank gear to original position as shown in Figure 4-16, with ratchet gear held against cam plate by spring tension.

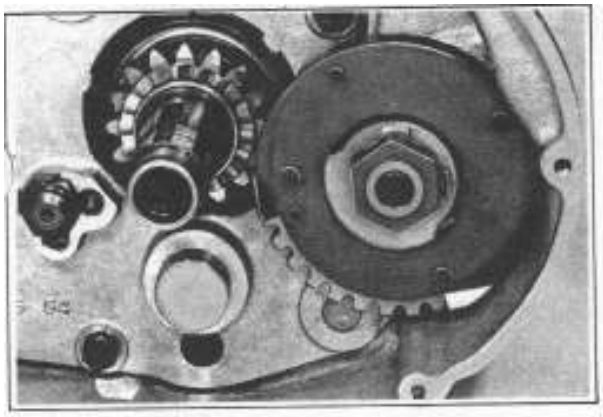

Figure 4-16. Positioning Starter Crank Gear on Starter Shaft

Check gear (6) and crank gear (12) to see that there is gear lash (play) through range of engagement.

CAUTION — If clutch sprocket spacer only (7), is replaced, the new spacer must be exactly the same length as the old spacer. Spacers are available in lengths shown in chart below for adjustment of clearance. If starter ratchet gear (6), starter ratchet (18), clutch sprocket hub or clutch gear are replaced it is absolutely necessary to check the clearance between teeth on starter ratchet gear (6) and starter ratchet (18) as follows:

1. Measure distance from end of ratchet sprocket spacer to top of starter ratchet gear teeth.

2. On clutch sprocket assembly, measure distance from top of starter teeth to clutch sprocket thrust washer.

3. Subtract the sprocket reading (2) from the ratchet gear reading (1) to obtain clearance.

4. If resulting clearance is less than .040 in. using short spacer (7), install long spacer to obtain .040 in. minimum clearance.

	1970	1971-Early 1973	Late 1973 & Later
Short Spacer	1.025	1.122	1.153 only
Long Spacer	1.047	1.143	

The following alternate method may also be used:

Using a discarded Clutch Sprocket Assembly, Part No. 37701-57, improvise a gauge to measure clearance between ratchet teeth on starter gear (6) and ratchet (18). Cut a "pie-shaped" section from the clutch shell to permit measurement between teeth with feeler gauge. Temporarily slip improvised clutch shell gauge over ratchet gear and hold firmly against spacer (7). With a feeler gauge measure clearance between ratchet teeth. If measured clearance is less than .040 in. using short spacer (7), install long spacer to obtain .040 in. minimum clearance. See transmission "SPECIFICATIONS."

Reassemble clutch as described in "ASSEMBLING CLUTCH."

Engage clutch cable end with clutch release lever and install transmission sprocket cover (5) and screws (4). Install exhaust pipe and muffler.

Slip spring (3) over squared end of shaft (11), end of spring and notch (A, Figure 4-14) up as positioned on motorcycle. Using a screwdriver rotate spring clockwise and engage with stud (17). Install bolt, lockwasher and nut (1).

ELECTRIC STARTER

DESCRIPTION (Figure 4-17)

The Bendix type drive shaft and gear assembly, located in starter housing between starting motor and clutch ring gear, provides automatic means of engaging the starter shaft drive pinion with the ring gear on the clutch sprocket for cranking the engine, and for disengaging the drive pinion from the ring gear after the engine starts.

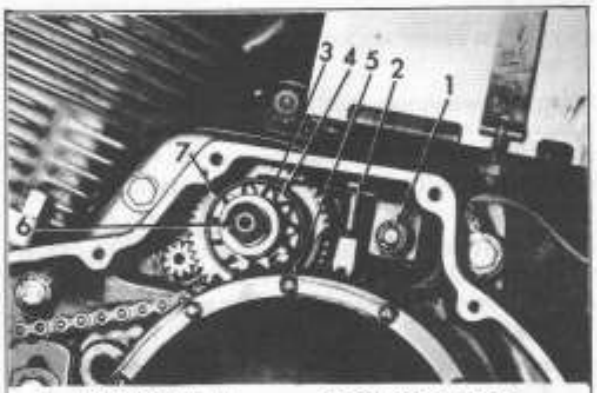

1. Armature shaft
2. Shifter lever
3. Shifting collar
4. Pinion gear
5. Clutch ring gear
6. Starter shaft
7. Overrunning clutch

Figure 4-17. Starter Drive

When the starter motor is not operating, the drive pinion is disengaged from the ring gear.

When the starter switch button closes starting circuit, the solenoid armature shaft (1) pulls shifter lever (2). Fingers on lever engage groove in shifting collar (3) which forces pinion gear (4) into engagement with clutch ring gear (5). At the same time, solenoid also closes starter motor circuit thus turning the ring gear and cranking the engine. After the engine starts and switch button is released spring return on solenoid shaft returns lever so that pinion gear disengages from ring gear and starter motor shuts off. There are matching spiral threads on starter shaft (6) and pinion gear (4) so pinion will shift if mating teeth do not line up for going into mesh. If starter button is not released after engine starts, pinion gear will turn freely by means of overrunning clutch (7) to prevent damage to starter.

DISASSEMBLING SOLENOID (Figure 4-18)

Remove solenoid as follows:

Remove battery cover and disconnect battery ground wire from battery terminal post. Remove solenoid cover (1) and disconnect wires from starter solenoid terminals held by nuts and lockwashers (2 and 3).

Remove primary chain housing cover.

WARNING — Whenever primary chain cover is removed, first disconnect battery negative cable to prevent accidental starter operation and possible injury.

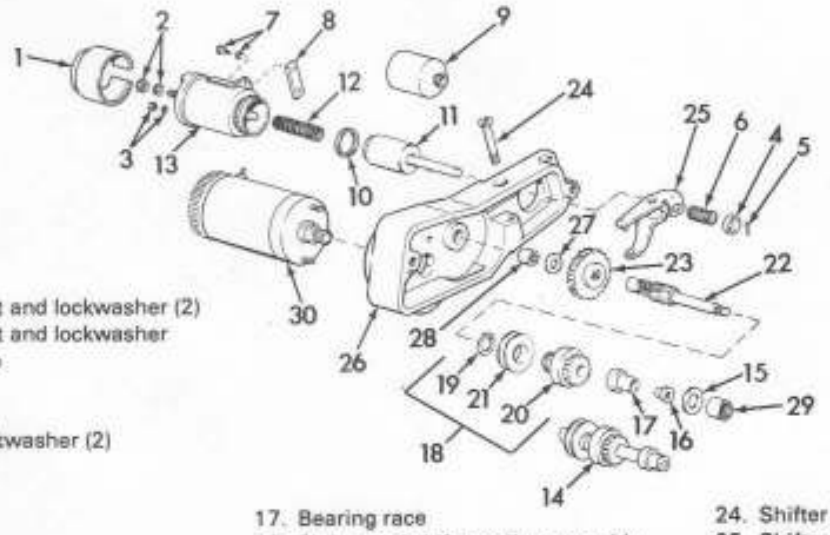

1. Cover
2. Terminal nut and lockwasher (2)
3. Terminal nut and lockwasher
4. Retainer cap
5. Pin
6. Spring
7. Bolt and lockwasher (2)
8. Spacer bar
9. Boot
10. Gasket
11. Plunger
12. Plunger spring
13. Solenoid
14. Pinion gear and shaft assembly
15. Thrust washer
16. Pinion shaft nut
17. Bearing race
18. Pinion and shifter collar assembly
19. Lock ring
20. Pinion gear
21. Shifter collar
22. Shaft
23. Drive gear
24. Shifter lever screw
25. Shifter lever
26. Starter shaft housing
27. Washer
28. Needle bearing
29. Needle bearing
30. Starter motor

Figure 4-18. Starter Shaft, Housing and Solenoid - Exploded View

Depress retainer cup (4), remove pin (5) from hole in plunger shaft (11). Remove spring (6).

Remove solenoid attaching bolts and lockwashers (7) and spacer bar (8). Remove solenoid (13) with boot (9), gasket (10), plunger (11), plunger spring (12).

DISASSEMBLING STARTER DRIVE SHAFT AND HOUSING (Figure 4-18)

Remove starter drive shaft and parts as follows:

Remove solenoid as described above.

Remove clutch as described in "DISASSEMBLING CLUTCH."

Rotate starter pinion lever (25) end forward and disengage lever fingers from pinion gear shifting collar (21). Pull pinion gear and shaft assembly (14) from housing (26). Then remove gear (23) and washer (27) from drive shaft.

To disassemble pinion gear and shaft assembly (14) remove thrust washer (15). Place nut (16) between copper jaws in a vise and unscrew from shaft (22) which has a left hand thread. Remove bearing race (17). Remove pinion and shifter collar assembly (18). Remove lock ring (19) to separate gear (20) and shifter collar (21).

To remove starter shifter lever (25), it is necessary to either remove starter drive housing (26) or remove battery and carrier to gain access to screw (24).

Remove screw (24) and lever (25) from housing (26). Remove starter motor (30) and housing (26) as an assembly by removing two bolts and lockwashers (not shown) from chain housing on left side of crankcase. (See "STARTER MOTOR," Section 5.)

Needle bearings (28 and 29) are pressed into housings at shaft ends. Washer (27) presses out with needle bearing (28).

To service starter motor see Section 5.

ASSEMBLING STARTER AND SOLENOID (Figure 4-18)

Assembly is essentially the reverse of disassembly, except as follows:

Clean needle bearings (28 and 29) and repack with grease. If replaced, needle bearing (28) should be pressed in flush with outside of housing. Stake washer (27). Pinion (20) and shaft (22) should be assembled with no lubrication on worm threads.

Shaft nut (16) should be secured to shaft with Harley-Davidson "Stud and Bearing Mount," Part No. 99626-77. Clean parts in solvent before applying "Stud and Bearing Mount" to threads.

Connect battery cable to longest solenoid terminal stud.

CAUTION — If cables are reversed, the solenoid will remain in battery circuit.

GENERAL

The transmission internal shifter mechanism, mainshaft and countershaft groups are an intergral part of the engine crankcase assembly. These groups may be serviced directly by removing the access cover from the crankcase as described in "REMOVING TRANSMISSION," thereby exposing all transmission parts for repair.

NOTE

On 1975 and 1976 models shifter linkage parts must be removed before transmission can be serviced as outlined in "1975 AND 1976 SHIFTER LINKAGE," below.

1975 AND 1976 SHIFTER LINKAGE

DISASSEMBLING, ASSEMBLING AND ADJUSTING SHIFTER PEDAL AND CROSS SHAFT MECHANISM

NOTE

The shifter pedal is located on the left side of the motorcycle and is connected through a cross shaft to the shifter mechanism on the right side.

Loosen rear exhaust pipe port clamp (6), Figure 3-4, and position out of the way. Remove front muffler. Remove right side footrest (11) along with rear brake mechanism (12A) and let hang free out of the way. Remove sprocket cover by removing two attaching screws (13), Figure 3-4.

From the left side of motorcycle, remove shifter foot pedal (1), Figure 4-19 as follows. Before removing, place a mark on splines of cross shaft (9) and pedal (1) to indicate original position for reassembly reference. Then remove screws (2). Insert screwdriver into slot as a wedge and pull pedal from cross shaft. On the right side of motorcycle, remove rear end of shifter link (6) from pin of arm (9) by removing lock ring (5). Loosen locknut (8) and unscrew pivot end (7), noting number of turns required for reassembly reference. Temporarily replace pivot end back on pin.

At this point, minor adjustments can be made by adjusting shifter link (6) as follows:

Position pedal (1) on splined shaft (9) so that it is 1/8 in. from the foot peg while at the same time adjusting pivot end (7) either in or out on shifter link (6) until cross shaft (9) is 3/16 in. from swing arm as shown in Figure 4-20.

NOTE

These dimensions should be measured on the maximum upshift motion of the shifter pedal into 4th gear.

If the dimensions specified cannot be achieved, major adjustments must be made by repositioning lever (13) on shifter shaft (16) as follows:

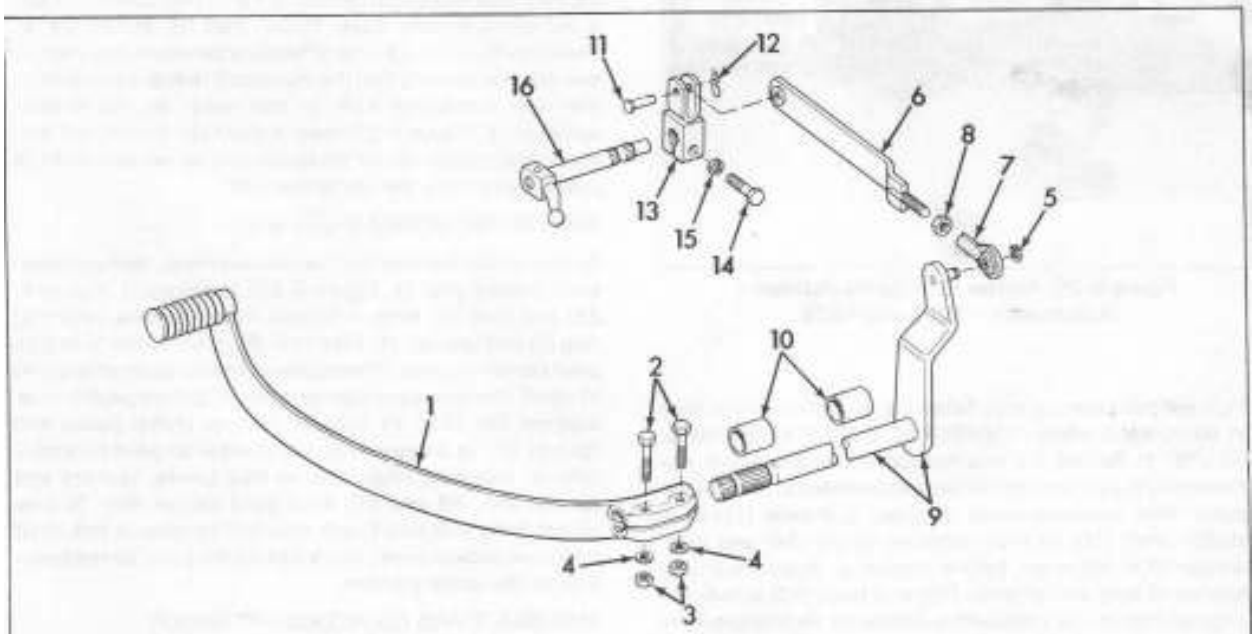

1. Shift pedal
2. Screw (2)
3. Washer (2)
4. Nut (2)
5. Lock ring
6. Shifter link
7. Pivot end
8. Nut
9. Cross shaft and arm
10. Bushing (2)
11. Pin
12. Clip
13. Lever
14. Screw
15. Lockwasher
16. Shifter shaft

Figure 4-19. Shifter Linkage Mechanism - Exploded View - 1975 and 1976

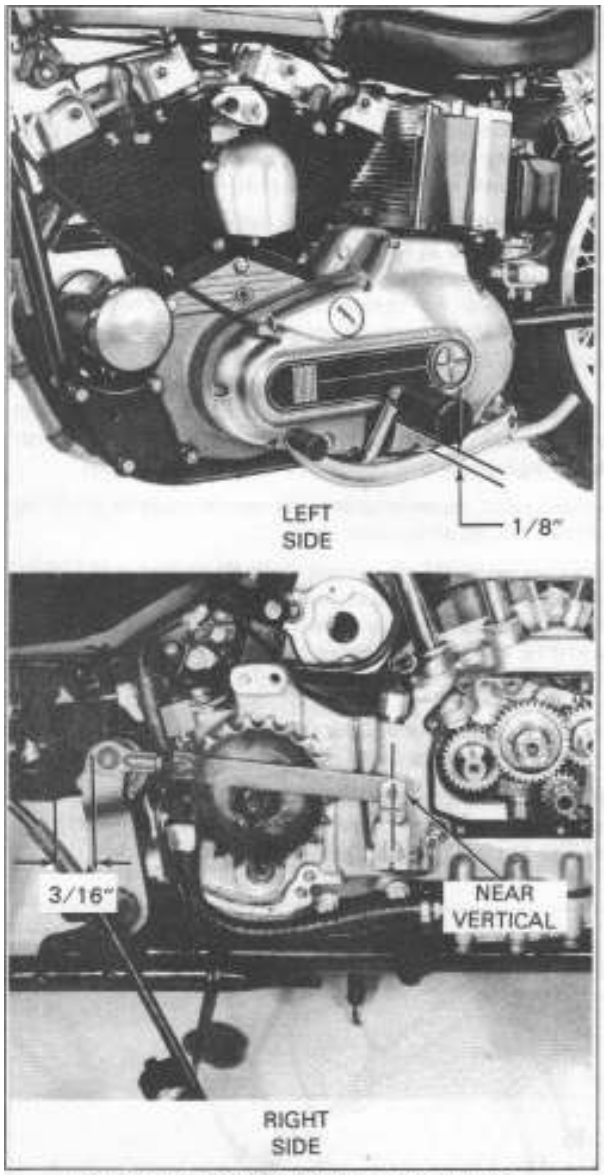

Figure 4-20. Shifter Linkage Mechanism - Adjustment - 1975 and 1976

Remove gearcase cover by following procedure as outlined in paragraphs under "GEARCASE COVER AND TIMING GEARS" in Section 3 of this manual. In this procedure, it is necessary to perform only those steps needed to remove the cover. With gearcase cover removed, pull lever (13) from shifter shaft (16) by first removing screw (14) and lockwasher (15). However, before removing, place a mark on splines of both shifter shaft (16) and lever (13) to indicate original position for reassembly reference. Reposition lever (13) on shifter shaft (16) either a spline forward or a spline backward while at the same time repeating steps above, to achieve the correct dimensions as shown in Figure 4-20.

This completes the disassembling and adjusting procedure. Inspect the parts for wear or damage. Replace any parts that inspection reveals are needed. Clean all parts thoroughly and reassemble remaining parts in reverse order of disassembly.

REMOVING TRANSMISSION

Place an oil drain pan under clutch and remove footrest, stoplight switch, rear brake foot pedal (1974 and earlier) or shifter pedal (1975 and later), chain case cover, clutch, front chain and compensating sprocket as described in "CLUTCH."

Remove starter crank assembly, right footrest and foot shift lever (1974 and earlier) or brake pedal (1975 and later). Loosen exhaust pipe, remove transmission sprocket cover, starter crank gear, starter clutch gear and starter crankshaft as described in "STARTER."

See Figure 4-21 and proceed as follows:

Loosen mainshaft nut (1) and disconnect rear chain by removing chain connecting link. Remove transmission mainshaft nut (1) and lockwasher (2). If mainshaft sprocket (3) is tight on shaft, use All Purpose Claw Puller to remove sprocket. To avoid tooth breakage grasp two teeth with each end of puller. Remove retainer screws (4), oil seal and retainer (5) and gasket (6).

See Figure 4-22. Remove four access cover capscrews (2). Remove access cover from crankcase with transmission parts attached to the cover (see Figure 4-24) by tapping on mainshaft end from right side of motorcycle.

This method removes the complete transmission.

An alternate method of removing the access cover is to pull it out using Access Cover Puller, Part No. 95560-57, as shown in Figure 4-23. The difference between this method and the one above is that the mainshaft remains attached to the right crankcase half. In this case, do not remove sprocket (3, Figure 4-21) from mainshaft. Attach tool and press mainshaft out of transmission as access cover is pulled away from the crankcase half.

SHIFTER MECHANISM (Figure 4-25)

To free shifter mechanism from access cover, remove mainshaft second gear (1, Figure 4-27), capscrew (1, Figure 4-25) and lock (2). With a Tru-arc Pliers remove retaining ring (3) and washer (4). Free cam (5), pawl carrier (6 or 6A), pawl carrier support (7) and pawl carrier support shims (7A) (if used). Remove pawl carrier springs (8) from pawl carrier support. On 1970-71 models, remove shifter pawls and springs (9). To disassemble 1972 and later pawl assembly remove retaining rings (9D) to free pawls, spacers and springs (9A, 9B and 9C) from pawl carrier (6A). To free shifter forks (10) and finger rollers (11), remove fork shaft (16) from access cover. Mark fork so they can be reassembled in the same position.

MAINSHAFT AND COUNTERSHAFT GROUP (Figure 4-27)

Remove mainshaft (2), thrust washer (3) and 23 rollers (4) from right crankcase. Remove low gear (5) from mainshaft splines. Pry retainer ring (6) from groove in mainshaft and discard ring. Slip washer (7) and third gear (8) from mainshaft.

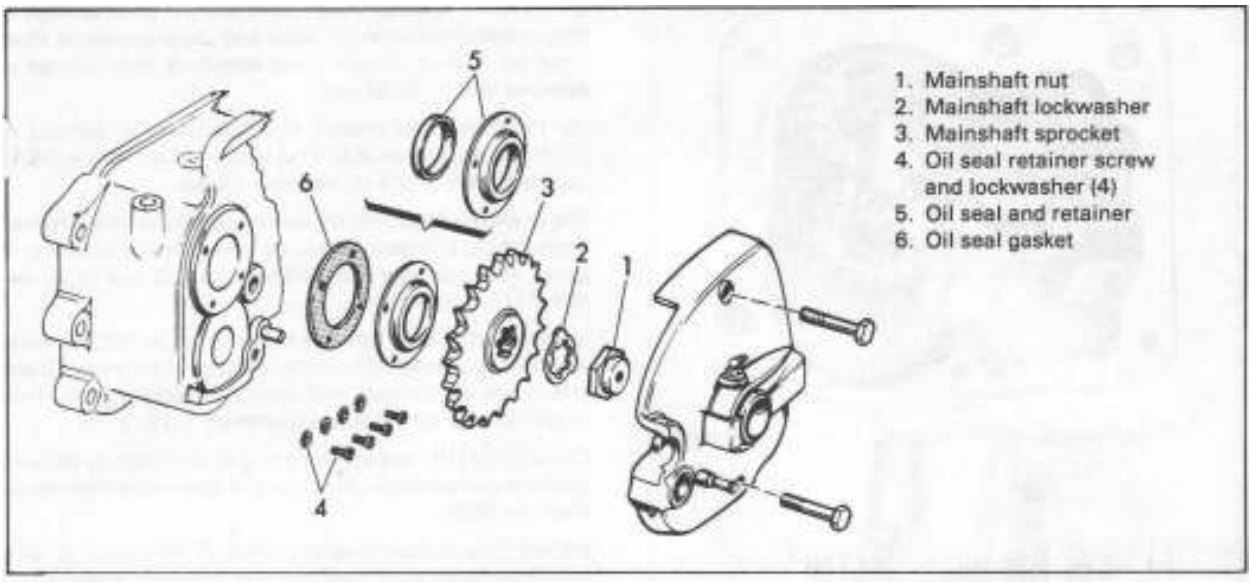

Figure 4-21. Transmission Mainshaft Sprocket

Support access cover (9) on arbor press, clutch gear threaded end up. Carefully press clutch gear (10) from ball bearing (20). Remove low gear washer (11) and third gear (12) from countershaft. Press drive gear (13) from countershaft splines and remove gear spacer (14), second gear (15) and thrust washer (16). Free countershaft low gear (18) and low gear washer (19). Drift out oiler plug (22) from inside of access cover.

INSPECTING AND REPLACING PARTS

Thoroughly clean transmission compartment and all shifter, mainshaft and countershaft parts with cleaning solvent. Blow parts dry with compressed air and inspect to determine if any must be replaced. Replace all parts that are badly worn or damaged.

TRANSMISSION SPROCKET (Figure 4-21)

Inspect mainshaft sprocket (3) for badly worn or damaged sprocket teeth and splines. Discard gasket (6). Check oil seal and retainer (5), lockwasher (2) and mainshaft nut (1).

SHIFTER MECHANISM (Figure 4-25)

Discard gear shifter cam retaining ring (3). Carefully examine gear shifter cam (5) for grooved or worn cam slots at the various running gear positions. Excessive wear at thrust points will make the transmission difficult to shift through gear range.

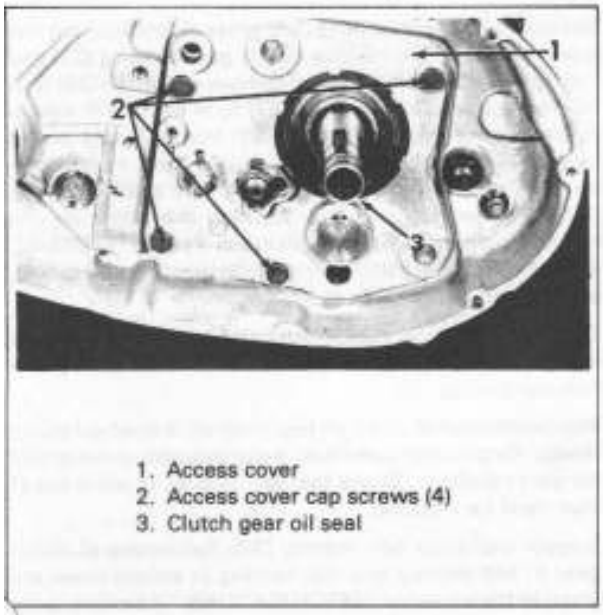

Figure 4-22. Transmission Access Cover

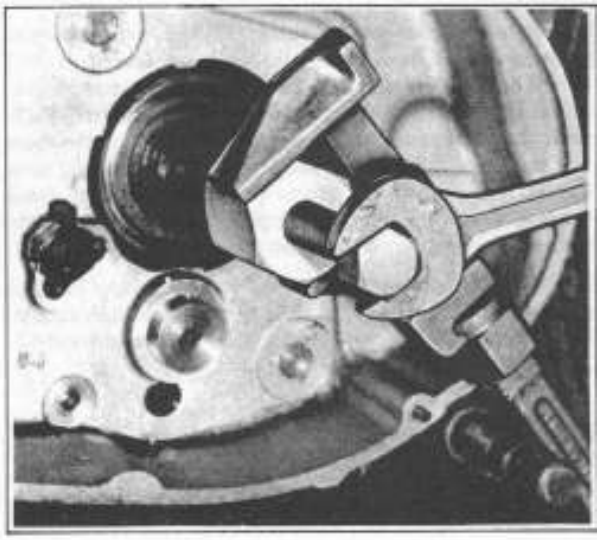

Figure 4-23. Removing Transmission Access Cover

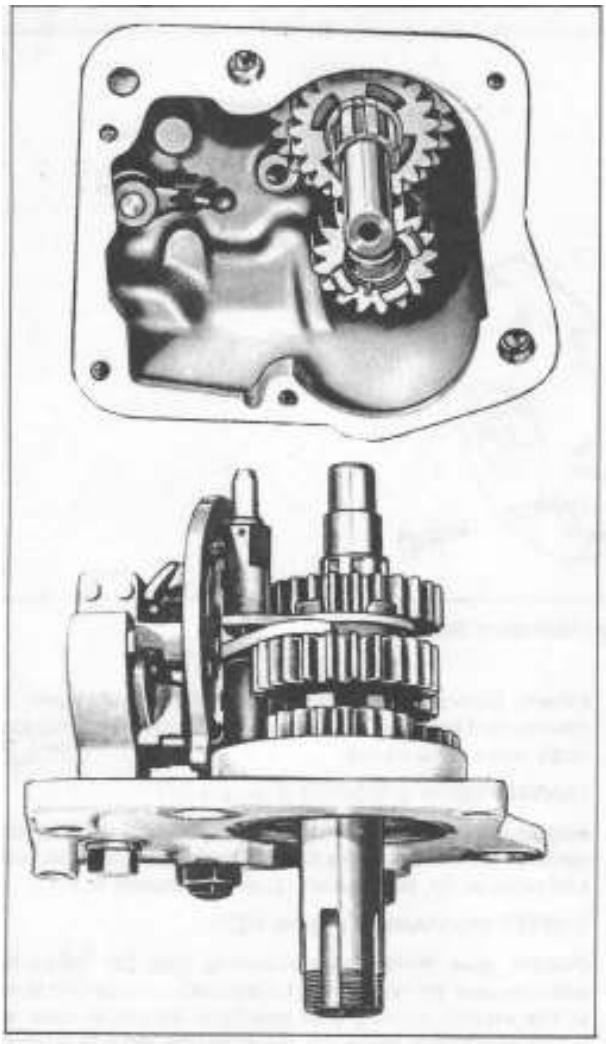

Figure 4-24. Transmission Access Cover Removed (1970-71 Model Shown)

Inspect gear shifter pawl carrier (6 or 6A) for depressions or grooves worn in fingers that engage shifter lever arm shaft (17). A badly worn yoke is caused by rubbing action of lever arm shaft ball, and will result in transmission jumping out of gear. Examine pawl carrier support for breakage or minute surface cracks. Loosely assemble shifter cam (5), pawl carrier (6), support (7), shims (7A) (if used), and check bearing action for appreciable play. Parts that show extremely worn or pitted surfaces should be replaced.

Examine pawl carrier springs (8) for breakage or damage caused by acids in oil. If possible, compare old springs with new springs. New spring free length is approximately 2-25/32 in.

NOTE

Do not use cadmium plated, 14-coil pawl carrier springs. Use only cadmium plated, 16-coil springs or black phosphatized springs, 14 or 16-coil, when reassembling pawl carrier support.

Examine shifter pawls (9 or 9A) for wear, grooves, cracks or breakage.

On 1970-71 Models: Insert right and left pawl springs in their respective carrier (6) holes and check operation. Pawl must be free in carrier. Free length of new springs is approximately 1-7/32 in.

On 1972 and later models, check for wear or damage to pawl (9A) and carrier (6A). Free length of new spring (9B) is approximately 1-3/4 in. between hooks.

Check shifter forks (10) for bent condition or deep grooves worn into fork fingers caused by excessive thrust action of gears. Also examine both shifter forks (10) and finger rollers (11) for breakage.

Inspect shifter cam follower (12) and spring (13) for wear and damage, especially on thrust face of follower. Check movement of follower and spring in retainer (14). Free length of new spring is approximately 1-19/32 in.

Check shaft (16) for bent or damaged condition by slipping shifter forks on shaft and noting if they have free movement on shaft.

Inspect gear shifter lever arm shaft (17) for wear or bent condition. Shaft must work freely in bushings. Remove any high spots from bushings with a half inch reamer. To ensure against oil leakage, replace oil seal (19) when reassembling.

MAINSHAFT AND COUNTERSHAFT GROUP
(Figure 4-27)

Inspect gears for badly battered, chipped or rounded dogs and slots at all thrust points. This condition will be evidenced by transmission jumping out of gear. Examine gear teeth for pitting, scoring, cracked, chipped condition or case hardening worn through. Inspect mainshaft, countershaft and all gears for pitting, grooving and excessive wear on bearing surfaces. Slip gears on shafts and check for wear and appreciable play. If not within specification limits as given in transmission "SPECIFICATIONS," replace worn parts.

To replace low gear bushing (23), press old bushing out and new bushing in. To replace clutch gear bushing (27) and needle roller bearing (28), first remove extension (26) with vise grip pliers. Drift bushing (27) from gear. Drift needle roller bearing (28) and washer (29) from opposite end of gear. Press new bushing into clutch gear shaft. Insert mainshaft in clutch gear and check to be sure shaft is .001 to .002 in. loose in gear. New bushing may close up and require reaming to size. Use Reamer, Part No. 94829-42, for this operation. Install needle roller bearing and spacer, pressing on printed side of bearing only.

On 1970 models, assemble extension to end of clutch gear using aluminum paint as a sealer. Install new oil seal and hub nut O-ring.

Position mainshaft and then countershaft in flywheel truing device. Rotate shafts and with a dial indicator check shafts for bent condition. Shafts that are .003 in. or more out of true must be replaced.

Inspect mainshaft ball bearing (20). Tolerances of clutch gear in ball bearing and ball bearing in access cover are given in transmission "SPECIFICATIONS." If bearing is not within specification limits or is worn to the extent that it has appreciable play or shake, replace it.

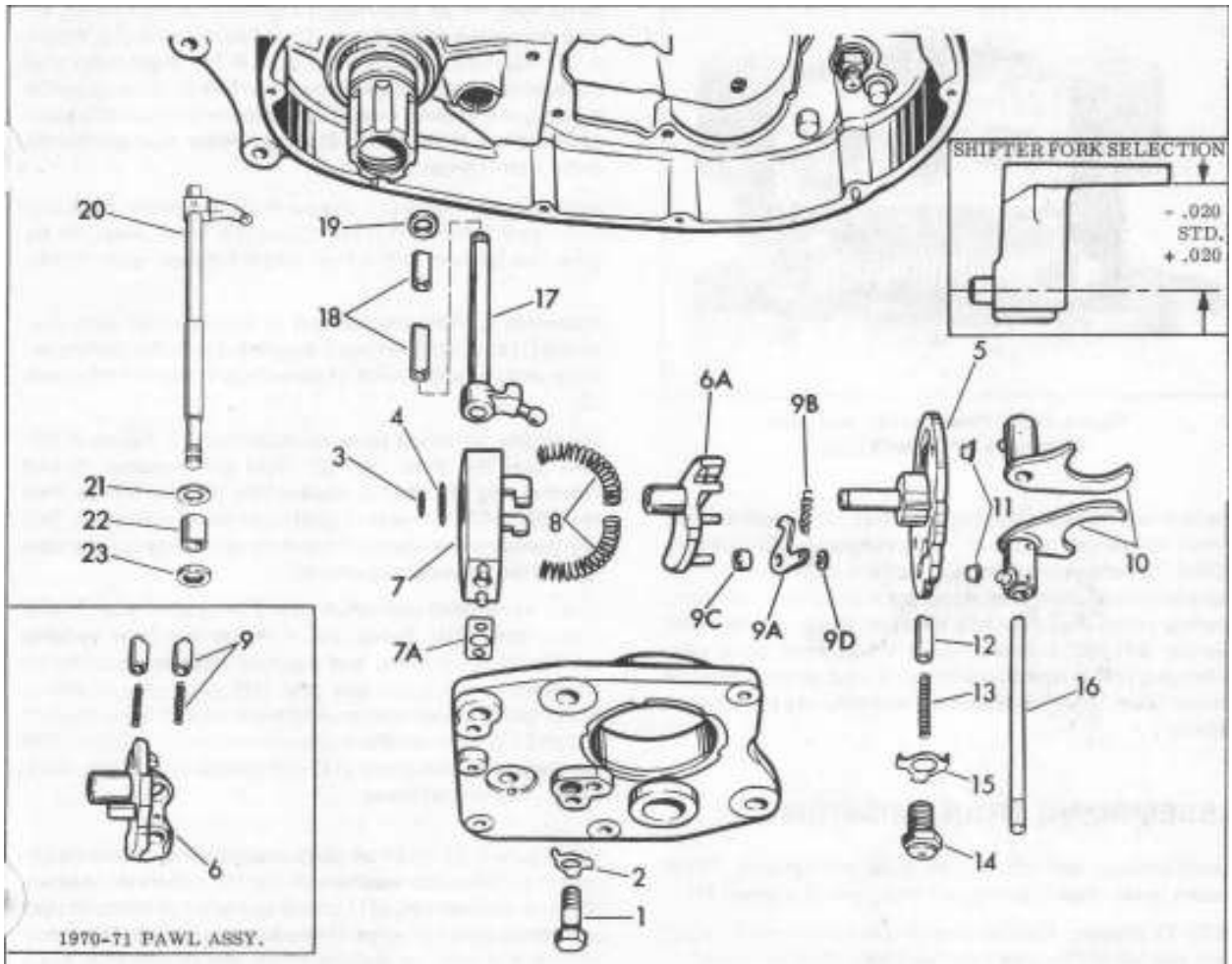

1. Cam capscrew
2. Capscrew lock
3. Cam retaining ring
4. Camshaft thrust washer
5. Gear shifter cam
6. Pawl carrier (1970-71)
6A. Pawl carrier (1972 and later)
7. Pawl carrier support
7A. Shim (.010 thick) as required
8. Pawl carrier springs (2)
9. Pawl and springs (2) (1970-71)
9A. Pawl (2) (1972 and later)
9B. Pawl spring (1972 and later)
9C. Pawl spacer (2) (1972 and later)
9D. Pawl retaining ring (2) (1972 and later)
10. Gear shifter forks (2) (variable)
11. Finger rollers (2)
12. Cam follower
13. Cam follower spring
14. Cam follower retainer
15. Cam follower retainer lock
16. Fork shaft
17. Lever arm shaft (1976 and earlier)
18. Shifter shaft bushings (2)
19. Shifter shaft oil seal
20. Lever arm shaft (1977 and later)
21. Thrust washer (1977 and later)
22. Bushing (1977 and later)
23. Seal (1977 and later)

Figure 4-25. Shifting Mechanism - Exploded View

To remove ball bearing (20) from access cover, first remove and discard snap ring (21). Support access cover on arbor press and press ball bearing from cover. Apply pressure to outer bearing race during pressing operation. Do not drive bearing from cover using a hammer and drift, as damage to bearing is likely to result.

To reassemble ball bearing, reverse order of disassembly. Install new snap ring (21).

amine all thrust washers and replace any that are badly orn or damaged.

Inspect rollers (4) and roller bearing race (30) and replace if badly pitted, scored or worn beyond fitting specifications.

To remove a badly worn bearing race, remove retainer ring (31) and roller bearing washer (32). Discard ring (31). Heat case surrounding bearing and drift race inward from outside of case. Press new race in until shoulder is against case inner surface. See transmission "SPECIFICATIONS," Section 4 for correct fit of mainshaft right side roller bearing.

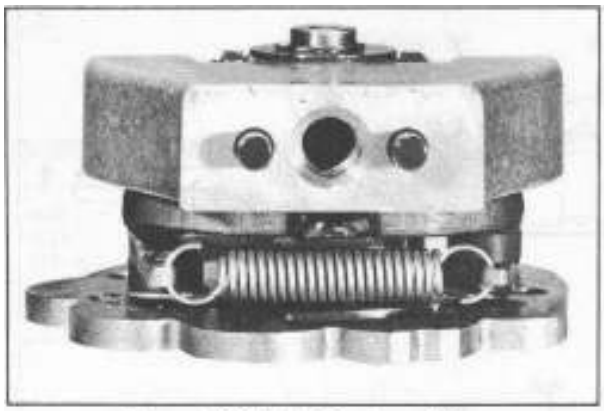

Figure 4-26. Pawl Carrier and Cam Assembly (1972 and Later)

Replace needle roller bearings (33 and 34) if worn and not within tolerances outlined in transmission "SPECIFICATIONS." Bearings are a press fit and should be removed for replacement of parts only. Apply pressure to printed side of bearing when pressing into position. Press needle roller bearing (34) into access cover 5/64 in. from inner side. (Oiler plug (22) is installed with oil hole up, as positioned on access cover, after countershaft end play has been established.)

ASSEMBLING TRANSMISSION

Install retainer lock (15, Figure 4-25) and retainer (14) in access cover. Insert springs (8) into slots of support (7).

1970-71 Models: Position carrier (6) in support (7). Insert right and left shifter pawls and springs (9) into their respective sockets, top ratchet engaging grooves facing each other. Hold spring loaded pawls in place with a thin spoke or knife blade and assemble cam (5), carrier (6) and support (7) with shims (7A) (if used). With Tru-arc pliers, install washer (4) and new retaining ring (3). Hold down one pawl at a time with knife blade and operate cam (5) to make sure pawls are free and correctly engaging with ratchet of cam (5).

1972 and Later Models: Install pawls (9A) on pawl carrier (6A), using spacers (9C) so that holes for spring hooks will be in alignment. One spacer will be on outside of pawl and the other will be underneath pawl as shown in Figure 4-26. Install pawl retaining ring (9D) and spring (9B). Assemble shifter cam (5) in pawl carrier (6A) retracting pawls one at a time to do so. Install assembly into support (7) with ear of carrier (6A) between ends of springs (8). Install washer (4) and new retaining ring (3). Operate cam (5) to make sure pawls operate correctly engaging with ratchet of cam.

Shims (7A) are used if necessary to adjust height of shifter assembly to ensure correct operation of shifter forks.

See Figure 4-27. Supporting access cover on arbor press table, install clutch gear (10) into ball bearing. Clutch gear must press in tightly and shoulder must rest against bearing inner race. Assemble thrust washer (16), second gear (15) and gear spacer washer (14) on countershaft (17). Assemble drive gear (13) on shaft. Make sure gear (15) turns free. Install countershaft group in access cover. Install mainshaft second gear (1) and shifter fork (10, Figure 4-25). Slip fork on shaft (16, Figure 4-25) finger roller stud positioned towards access cover and fork finger engaged in running slot of gear. Repeat operation with second fork and countershaft third gear (12), finger roller stud positioned away from access cover.

Install finger rollers (11, Figure 4-25) on shifter forks and insert cam follower (12) and spring (13) in follower (14). Be sure cam follower (12) is free in cam follower retainer (14).

Assemble shifting mechanism to access cover with capscrew (1) and retainer ring (2, Figure 4-25). In the same operation, engage shifter fork finger rollers in slot of shifter cam (5).

Install the following parts on mainshaft (2, Figure 4-27). Low gear (5), third gear (8), third gear washer (7) and retainer ring (6). Always replace ring (6). Use Sleeve, Part No. 96396-52, to install ring (6) in groove of mainshaft. This tool prevents the retainer ring from spreading out of shape during the assembly operation.

Insert assembled mainshaft group in second gear (1) and clutch gear (10). Select the thinnest low gear variable washer (11) available and position against shoulder on countershaft. Position low gear (18) on shaft and with a feeler gauge check clearance between clutch faces of gears (18 and 12). Use variable size washers to attain .038 to .058 in. clearance. Washers (11) are available in .065, .075, .085, .100 in. thickness.

See Figure 4-27. With all parts assembled to access cover, except variable size washers (3 and 19), rollers (4), washer (32) and retainer ring (31), check operation of transmission by shifting through range of gears several times. Then shift into neutral position (between first and second gear positions), and with a feeler gauge check clearance between clutch faces of gears (15 and 12). If correct clearance of .038 to .058 in. is not obtained, it is possible that shifter forks (10) are bent and should be repaced.

Using a feeler gauge, check clearance between clutch bore of gears (10 and 8) and (8 and 1). If correct clearance of .043 to .083 in. is not obtained, it is possible that the shifter forks are bent or worn and should be replaced.

If correct clearance cannot be obtained with standard size forks and spacer washers, -.020 or +.020 size shifter forks are available to space countershaft third or mainshaft second gears individually.

Shims (7A, Figure 4-25) should be employed to space both mainshaft 2nd and countershaft 3rd gears away from access cover if necessary.

Make a final check for proper gear engagement by performing the following procedure.

With the transmission completely assembled (not in crankcase, however), hold on to shifter cam (5), Figure 4-25 so that cam follower (12) does not complete the shift. Then, shift the transmission into all four gears (upshift and downshift). In each case, check to see that the sliding gears go into their respective mating gears at least 50%, with 25% being the minimum allowable into low gear. If the sliding

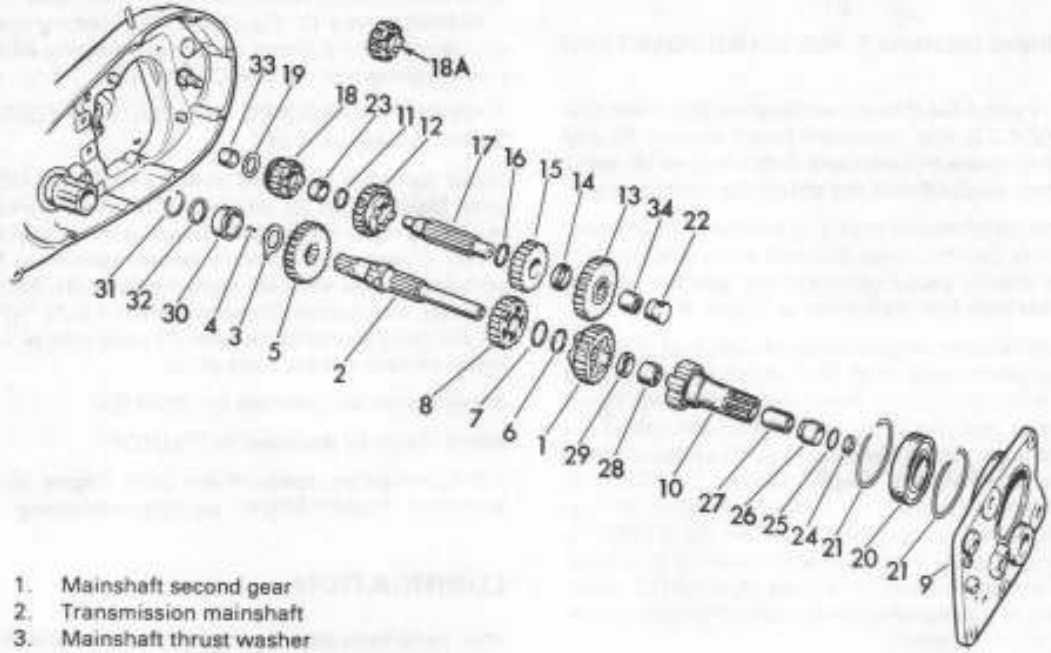

1. Mainshaft second gear
2. Transmission mainshaft
3. Mainshaft thrust washer (variable thickness) – Controls end play of mainshaft
4. Transmission mainshaft roller (23)
5. Mainshaft low gear
6. Mainshaft third gear retainer ring
7. Mainshaft third gear washer
8. Mainshaft third gear
9. Access cover
10. Clutch gear
11. Countershaft low gear washer (2 req., 1974 and later)
12. Countershaft third gear
13. Countershaft drive gear
14. Countershaft gear spacer
15. Countershaft second gear
16. Countershaft second gear thrust washer
17. Transmission countershaft
18. Countershaft low gear (1972 and earlier)

18A. Countershaft low gear (1973 and later)

19. Countershaft low gear washer (variable thickness) – Controls end play of countershaft
20. Mainshaft ball bearing
21. Mainshaft ball bearing snap ring (2)
22. Countershaft oiler plug
23. Countershaft low gear bushing
24. Clutch gear oil seal (1970 only)
25. Clutch hub nut O-ring (1970 only)
26. Clutch gear oil seal extension (1970 only)
27. Clutch gear bushing
28. Clutch gear needle roller bearing
29. Mainshaft thrust washer
30. Mainshaft roller bearing race
31. Mainshaft roller bearing retainer ring
32. Mainshaft roller bearing washer
33. Countershaft bearing – closed end
34. Countershaft bearing – open end

Figure 4-27. Countershaft and Mainshaft Group - Exploded View

gears do not engage properly, inspect and replace any of the following parts if found defective: (5), (6 or 6A), (7) access cover, (9 or 9A).

If any parts are replaced, recheck clearances again as a final step.

ESTABLISHING MAINSHAFT AND COUNTERSHAFT END PLAY

Temporarily select the thinnest variable low gear washer(s) (19, Figure 4-27) and mainshaft thrust washer (3) and install in their respective positions. Install washer (3), ear of washer down as positioned in transmission compartment.

Temporarily install access cover to crankcase with all transmission parts. Carefully align cover on dowel pins and with a rawhide mallet, gently tap cover into position. Secure access cover with four capscrews (2, Figure 4-22).

Using a dial indicator, check end play of mainshaft (2), gauging from sprocket side of shaft. With clutch assembled, end play should be checked with clutch disengaged. With clutch disassembled, mainshaft end play must be checked with a load on the inner race of the access cover as follows: Place three Clutch Shell Spacers, Part No. 33442-77 or 37753-76 (or a piece of pipe of equal size), on the clutch gear shaft. Using Clutch Spring Compressor Tool, Part No. 97178-71, load the access cover inner race with a load equal to force needed to compress the clutch springs. With load on the inner race, move the mainshaft back and forth and note reading of the dial indicator.

To check countershaft end play, oiler plug (22, Figure 4-27) must be removed. Bend a discarded wheel spoke and wedge in countershaft oil hole. With dial indicator mounted on end of countershaft, move countershaft back and forth with bent spoke and note reading of the dial indicator.

If end play of mainshaft or countershaft is not within specified limits (see Transmission "SPECIFICATIONS"), remove access cover and install correct size variable thickness washers (3 and 19, Figure 4-27) to achieve correct fit.

Variable size washers are available for the mainshaft in sizes .030 in. to .085 in. and for the countershaft in sizes .020 in. to .075 in.

With mainshaft and countershaft end play established, center the gear shifter lever arm shaft (17, Figure 4-25), so that it will engage with gear shifter pawl yoke when access cover is in place. Make sure lever arm is correctly engaged with shifter pawl yoke by lightly rotating countershaft (17) and testing for engagement.

With transmission and access cover assembled, install 23 mainshaft rollers (4, Figure 4-27) in bearing race using grease to hold in position. Install roller bearing washer and roller bearing retainer ring (32 and 31).

MAINSHAFT SPROCKET, STARTER AND CLUTCH ASSEMBLIES (Figure 4-21)

Install foot shift lever and shift transmission into fourth gear. Install gasket (6), oil seal and retainer (5) and screws (4). Do not tighten screws (4). Temporarily position sprocket (3) on mainshaft to correctly locate retainer (5). Remove sprocket (3) and securely tighten screws (4). Reassemble sprocket, lockwasher (2) and mainshaft nut (1). Tighten nut (1) and bend ears of lockwasher (2) against head of nut (1). Install release rod end, and chain.

Install starter as described in "STARTER."

Install clutch as described in "CLUTCH."

Fill transmission compartment with engine oil as described in "LUBRICATION," paragraph following.

LUBRICATION

With motorcycle standing straight up, remove oil filler plug and oil level plug. The oil filler plug is located near the top of the chain case cover and the oil level plug is located near the bottom of the chain case cover.

Refill transmission with same grade of oil used in engine. Add oil until it begins to overflow through oil level hole. Permit excess oil to flow from oil level hole until it ceases to run. This is correct oil level. Reinsert and tighten oil level and oil filler plug.

Drain transmission and refill to correct level with fresh, clean oil once each year or every 5000 miles, whichever comes first. If transmission should become submerged in water, drain immediately and refill with clean oil to the correct level.

TOOLS

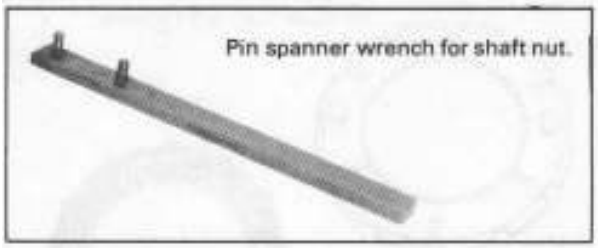

Part No. 94557-55 Compensating Sprocket Shaft Nut Wrench

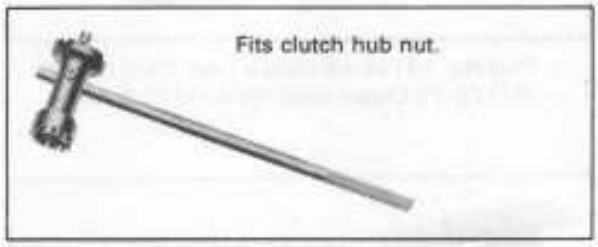

Part No. 94647-52 Clutch Hub Nut Wrench

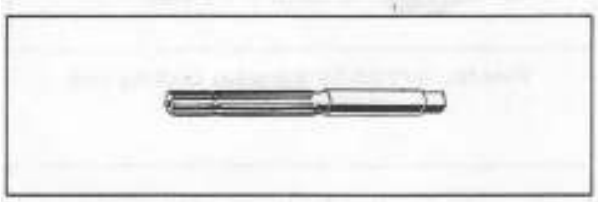

Part No. 94829-42 Clutch Gear Bushing Reamer

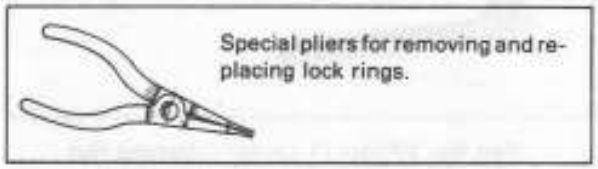

Part No. 95017-61 External Lock Ring Pliers

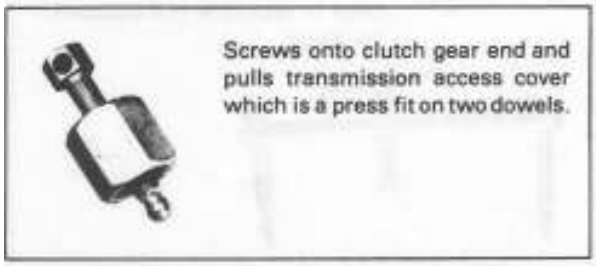

Part No. 95560-57 Transmission Access Cover Puller

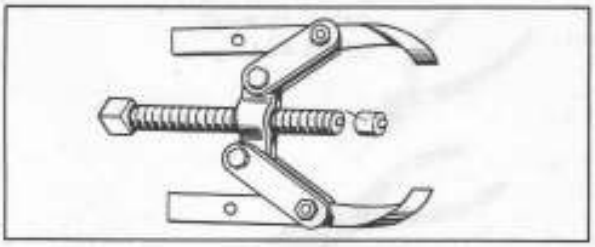

Part No. 95635-46 All Purpose Claw Puller

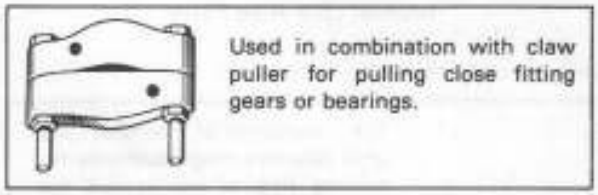

Part No. 95637-46 Wedge Attachment for Claw Puller

Part No. 95960-52A Clutch Hub Puller

Part No. 96015-56 Sprocket Shaft Extension Puller

Special pliers for removing and replacing lock rings.

96215-49 Small
96216-49 Large

Internal Lock Ring Pliers

For installation of mainshaft 3rd gear retaining ring – to ensure retaining ring in not spread too much.

Part No. 96396-52 Mainshaft 3rd Gear Retaining Ring Sleeve

For installing flywheel assembly into crankcase Timken bearing.

Part No. 97081-54 Sprocket Shaft Bearing Tool

Used to install clutch hubs, clutch gear extension, transmission mainshaft sprocket.

Part No. 97170-55A Hub Installing Tool

Used to hold clutch shell from turning when engine sprocket, clutch hub and rear chain front sprocket nuts are removed.

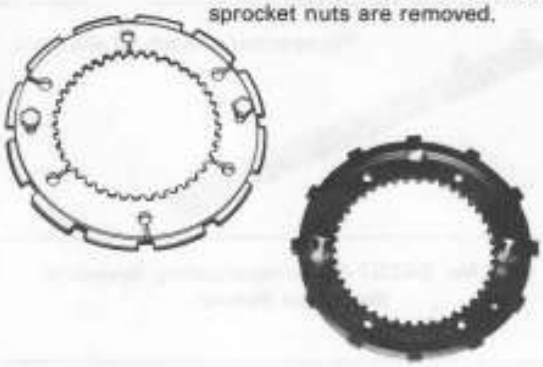

Part No. 97175-55 Clutch Lock Plate (1970)
97173-71 Clutch Lock Plate (1971 & Later)

Locks the engine sprocket teeth and the clutch sprocket teeth to prevent rotation when nuts are removed or installed.

Part No. 97200-55 Sprocket Locking Link (1976 & Earlier)

Used to loosen and tighten clutch adjusting screw locknut, also to unscrew access hole plug.

Part No. 94580-71 Clutch Adjusting Nut Wrench – 1971 & Later Fits 13/16" Hex

Used to assemble and disassemble clutch.

Part No. 97178-71 Clutch Spring Compressor (1971 & Later)

ELECTRICAL 5

TABLE OF CONTENTS

	PAGE
General	5-1
Wiring	5-3
Switches	5-17
Lamps	5-21
Generator	5-23
Circuit Breaker	5-29
Ignition Coil	5-37
Spark Plugs	5-39
Regulator	5-41
Battery	5-49
Horn	5-51
Starter Motor	5-53
Tools	5-57

SPECIFICATIONS

Ignition	Coil, double secondary outlet
Spark timing	
Breaker points setting	.018 in. gap
Spark occurs at	40° ± 2.5°
	Approx. 10° fully retraded
Cylinder variance	Not to exceed 2.5°
Spark plug	Harley-Davidson No. 4 (standard)
	Harley-Davidson No. 4R (resistor type)
Size	14 mm
Gap	.025-.030 in.
Tightening torque	30 ft-lbs
Battery	
XLH	12 volt, 32 amp hr
XLCH	12 volt, 7 amp hr
Starter	
XLH	Elect., 12 volt Bendix Drive
XLCH	Manua
Generator	Two brush shunt, externa
	regulator contro
Regulator	Current and voltage contro
Horn	Electric vibrating
Lights	
Headlamp (sealed beam)	35W lower, 45W uppe
Stop light	32 C.P
Tail light	4 C.P

KEY FOR WIRING DIAGRAM (Figure 5-1)

1. Fork terminal board (terminals 1 to 5)
6. Headlamp dimmer switch
7. Horn switch
8. Generator "F" and "A" terminals
9. Regulator
   "BAT" or B terminal
   "GEN" or D
   "F" or DF terminal
10. Overload circuit breaker
11. Tail lamp
12. Junction terminal board (4 terminals)
13. Starter motor (XLH)
14. Starter solenoid (XLH)
15. Battery
16. Rear stoplight switch
17. Ignition coil
18. Ignition circuit breaker
19. Ignition – light switch
20. Oil signal light switch
21. Starter button (XLH)
22. Horn
23. Speedometer light
24. Oil signal light
25. High beam indicator light
26. Generator indicator light
27. Headlamp
28. Tachometer light
29. Direction signal switch
30. Direction signal flasher
31. Left front direction lamp
32. Right front direction lamp
33. Left rear direction lamp
34. Right rear direction lamp
35. Front stoplight switch
36. Crankcase bolt
37. Connector
38. License lamp
39. Starter Relay (XLH)

KEY TO COLOR CODE	
B	BLACK
W	WHITE
O	ORANGE
R	RED
G	GREEN
Y	YELLOW
V	VIOLET
BE	BLUE
BN	BROWN
GY	GRAY

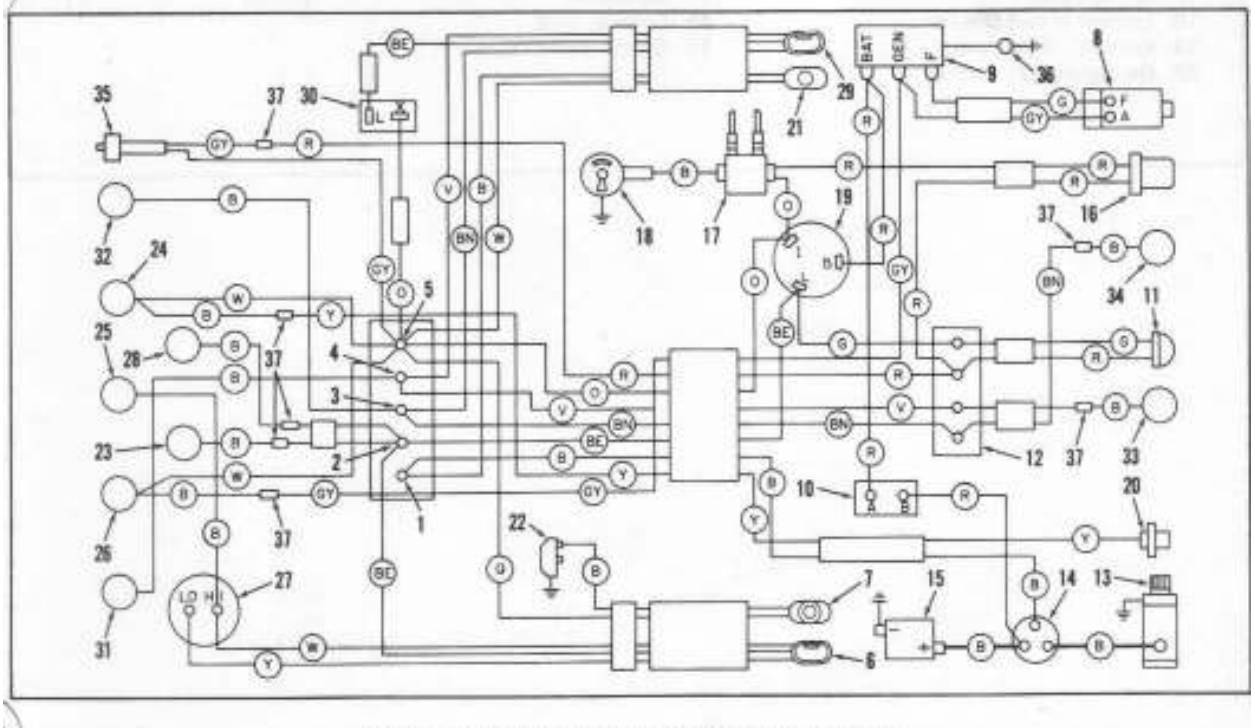

Figure 5-1. Wiring Diagram, 1970-71 Model XLH

KEY FOR WIRING DIAGRAMS (Figures 5-2 and 5-2A)

1. Fork terminal board (terminals 1 to 5)
6. Headlamp dimmer switch
7. Horn switch
8. Generator "F" and "A" terminals
9. Regulator
   "BAT" or B terminal
   "GEN" or D
   "F" or DF terminal
10. Overload circuit breaker
11. Tail lamp
12. Junction terminal board (4 terminals)
13. Starter motor (XLH)
14. Starter solenoid (XLH)
15. Battery
16. Rear stoplight switch
17. Ignition coil
18. Ignition circuit breaker
19. Ignition - light switch
20. Oil signal light switch
21. Starter button (XLH)
22. Horn
23. Speedometer light
24. Oil signal light
25. High beam indicator light
26. Generator indicator light
27. Headlamp
28. Tachometer light
29. Direction signal switch
30. Direction signal flasher
31. Left front direction lamp
32. Right front direction lamp
33. Left rear direction lamp
34. Right rear direction lamp
35. Front stoplight switch
36. Crankcase bolt
37. Connector
38. License lamp
39. Starter Relay (XLH)

KEY TO COLOR CODE	
B	BLACK
W	WHITE
O	ORANGE
R	RED
G	GREEN
Y	YELLOW
V	VIOLET
BE	BLUE
BN	BROWN
GY	GRAY

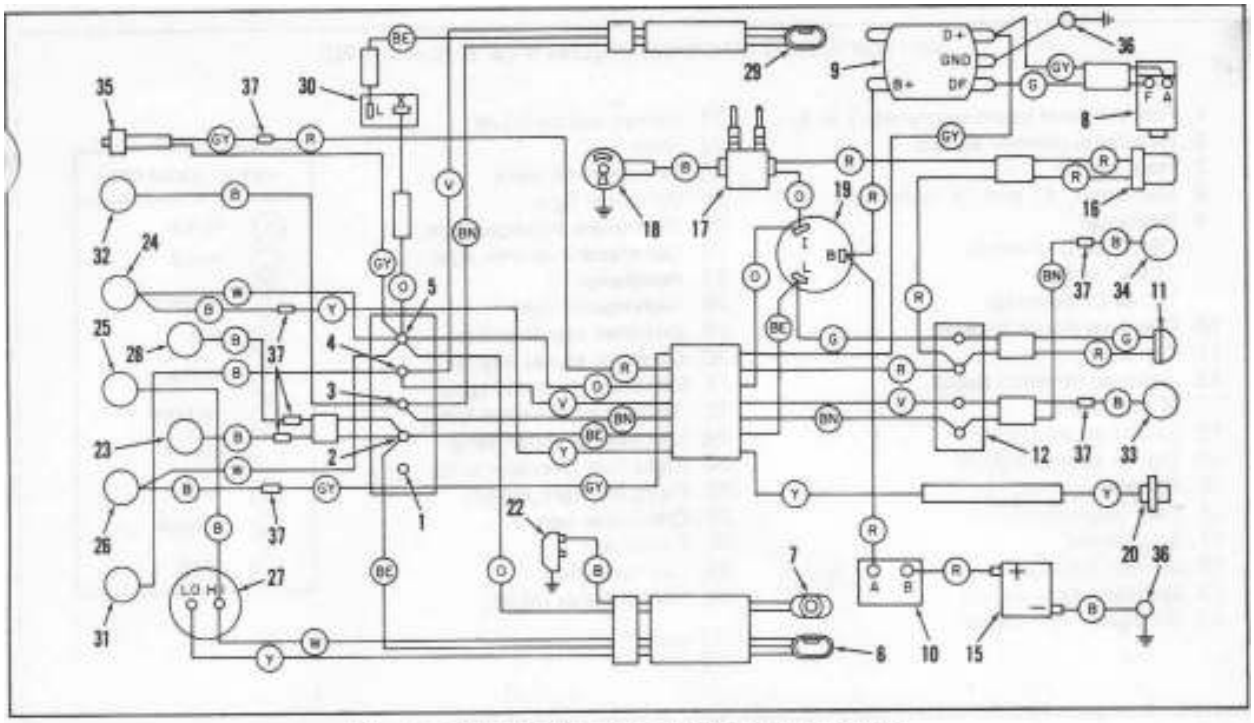

Figure 5-2. Wiring Diagram, 1970-71 Model XLCH

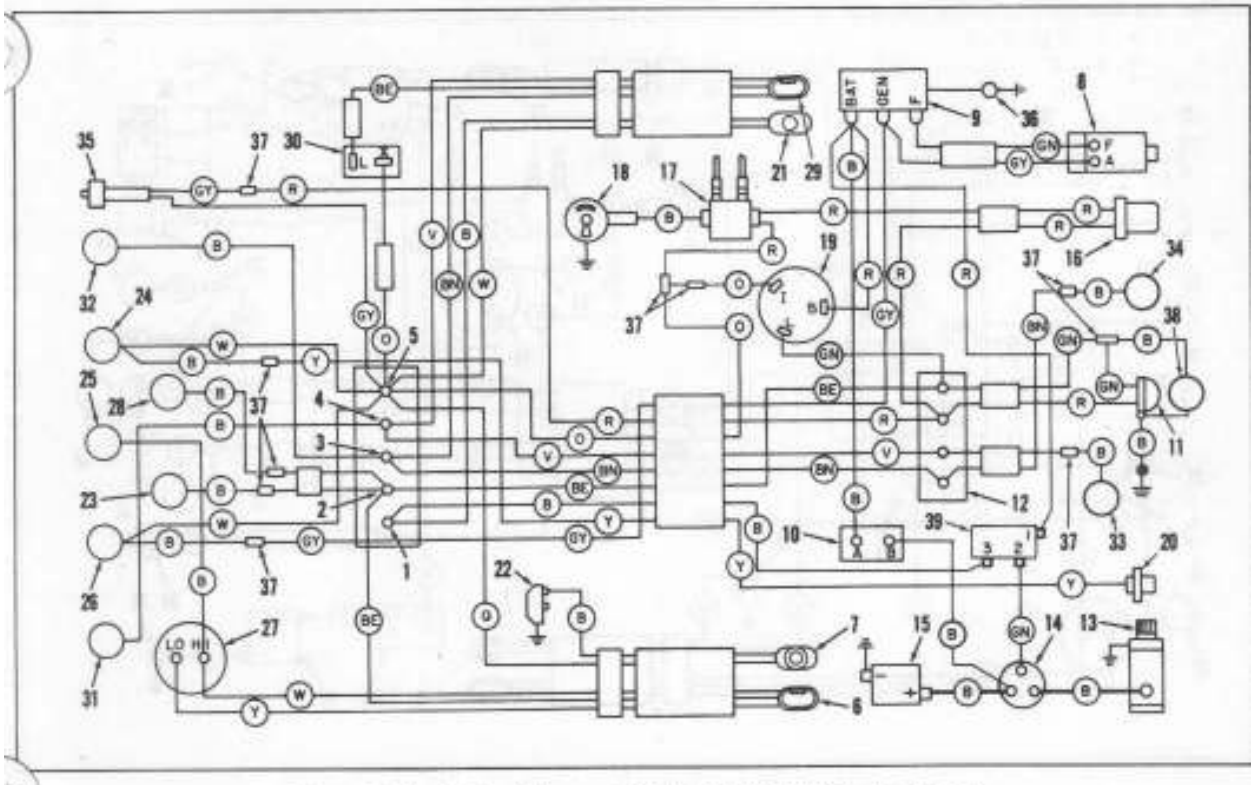

Figure 5-2A. Wiring Diagram, 1972 Model XLH (Standard Seat)

KEY FOR WIRING DIAGRAMS (Figures 5-2B, 5-2C and 5-2D)

1. Fork terminal board (terminals 1 to 5)
6. Headlamp dimmer switch
7. Horn switch
8. Generator "F" and "A" terminals
9. Regulator
   "BAT" or B terminal
   "GEN" or D
   "F" or DF terminal
10. Overload circuit breaker
11. Tail lamp
12. Junction terminal board (4 terminals)
13. Starter motor (XLH)
14. Starter solenoid (XLH)
15. Battery
16. Rear stoplight switch
17. Ignition coil
18. Ignition circuit breaker
19. Ignition – light switch
20. Oil signal light switch
21. Starter button (XLH)
22. Horn
23. Speedometer light
24. Oil signal light
25. High beam indicator light
26. Generator indicator light
27. Headlamp
28. Tachometer light
29. Direction signal switch
30. Direction signal flasher
31. Left front direction lamp
32. Right front direction lamp
33. Left rear direction lamp
34. Right rear direction lamp
35. Front stoplight switch
36. Crankcase bolt
37. Connector
38. License lamp
39. Starter Relay (XLH)

KEY TO COLOR CODE	
B	BLACK
W	WHITE
O	ORANGE
R	RED
G	GREEN
Y	YELLOW
V	VIOLET
BE	BLUE
BN	BROWN
GY	GRAY

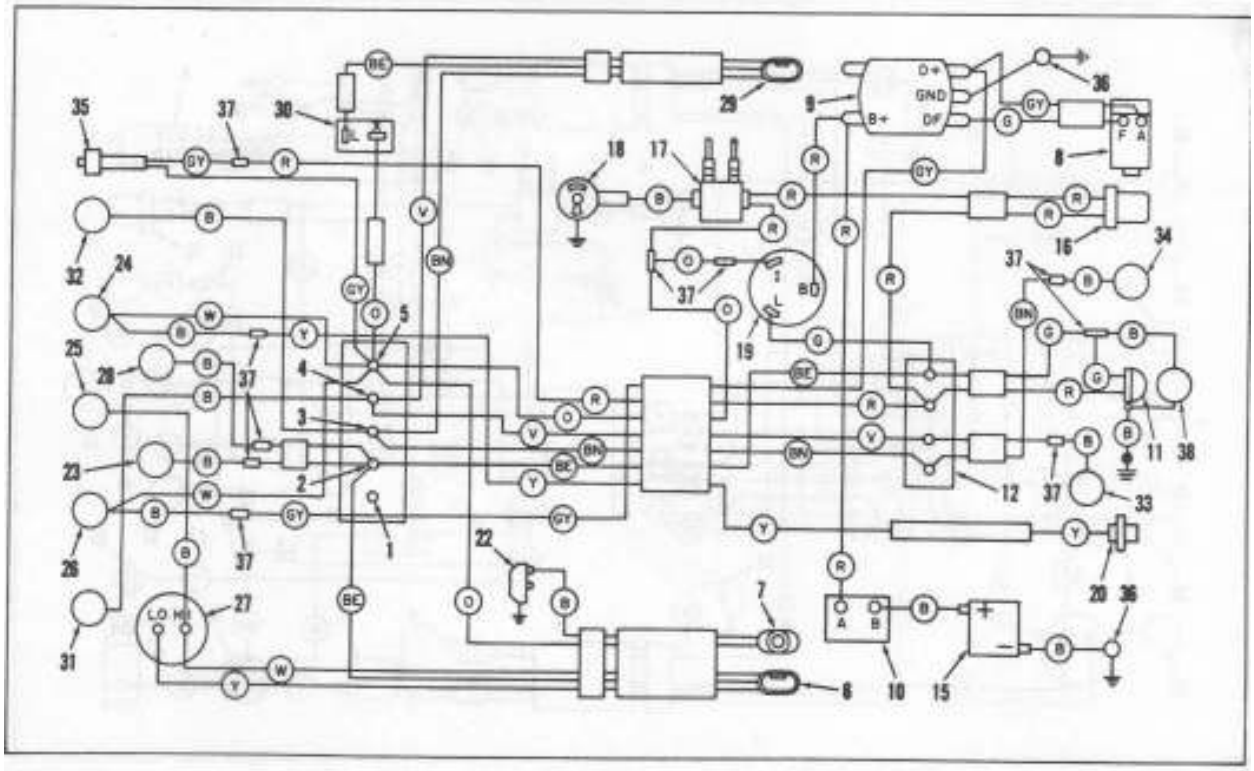

Figure 5-2B. Wiring Diagram, 1972 Model XLCH (Standard Seat)

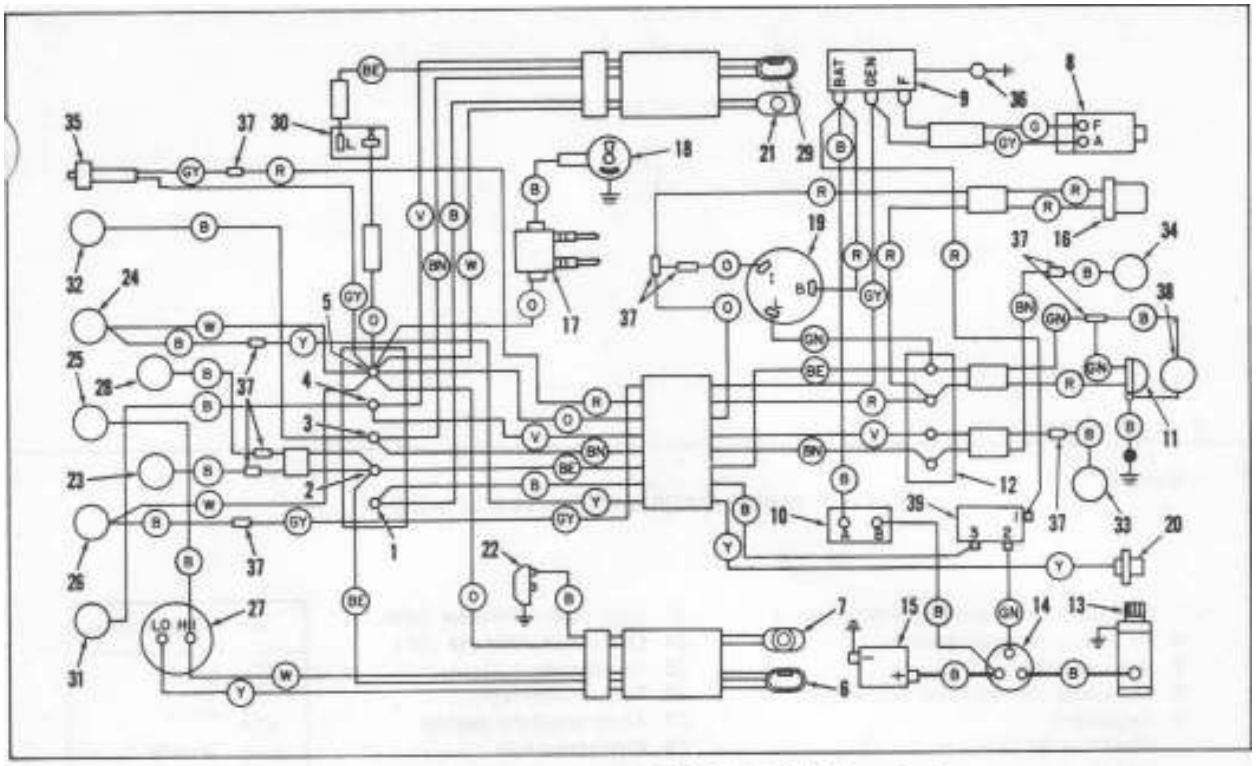

Figure 5-2C. Wiring Diagram, 1972 Model XLH (Low Seat)

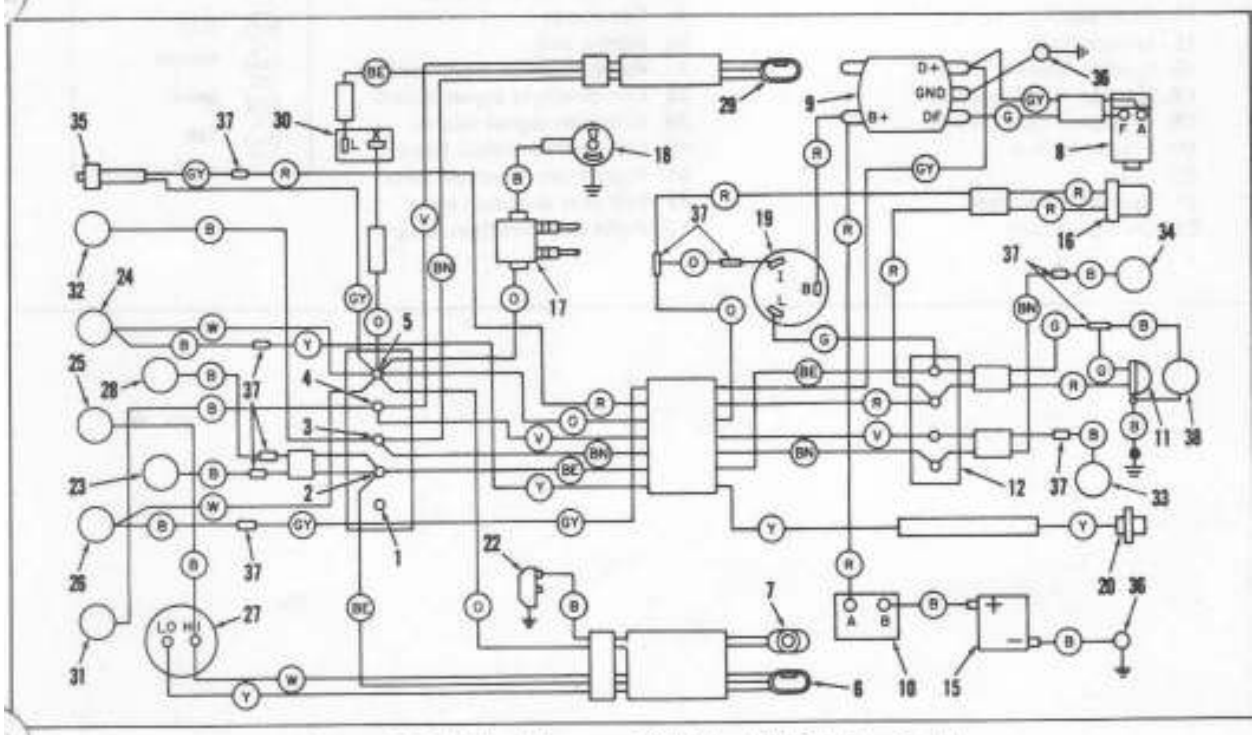

Figure 5-2D. Wiring Diagram, 1972 Model XLCH (Low Seat)

KEY FOR WIRING DIAGRAMS (Figures 5-2E and 5-2F)

1. Fork terminal board (terminals 1 to 5)
6. Headlamp dimmer switch
7. Horn switch
8. Generator "F" and "A" terminals
9. Regulator
   "BAT" or B+ terminal
   "GEN" or D+
   "F" or DF terminal
10. Tail lamp
11. Starter motor
12. Starter solenoid
13. Battery
14. Rear stoplight switch
15. Ignition coil
16. Ignition breaker (timer)
17. Ignition – light switch
18. Oil signal light switch
19. Starter button
20. Horn
21. Speedometer light
22. Oil signal light
23. High beam indicator light
24. Generator indicator light
25. Headlamp
26. Tachometer light
27. Front stoplight switch
28. Crankcase bolt
29. Starter relay
30. Engine stop switch
31. Rear harness connector
32. Lighting circuit breaker
33. Accessory circuit breaker
34. Ignition circuit breaker
35. Connector
36. Frame bolt
37. Right direction signal switch
38. Left direction signal switch
39. Direction signal flasher
40. Left front direction lamp
41. Right front direction lamp
42. Left rear direction lamp
43. Right rear direction lamp

KEY TO COLOR CODE	
B	BLACK
W	WHITE
O	ORANGE
R	RED
G	GREEN
Y	YELLOW
V	VIOLET
BE	BLUE
BN	BROWN
GY	GRAY
TN	TAN

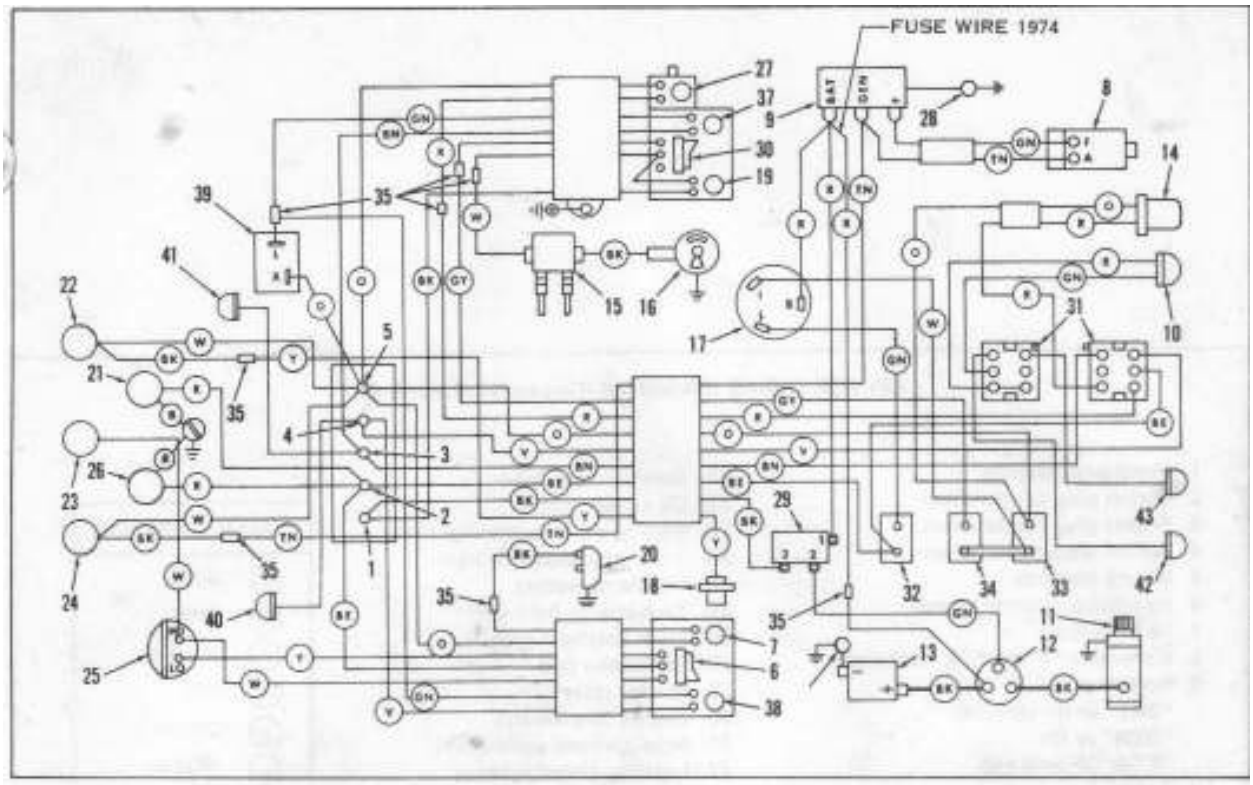

Figure 5-2E. Wiring Diagram, 1973-74 Model XL

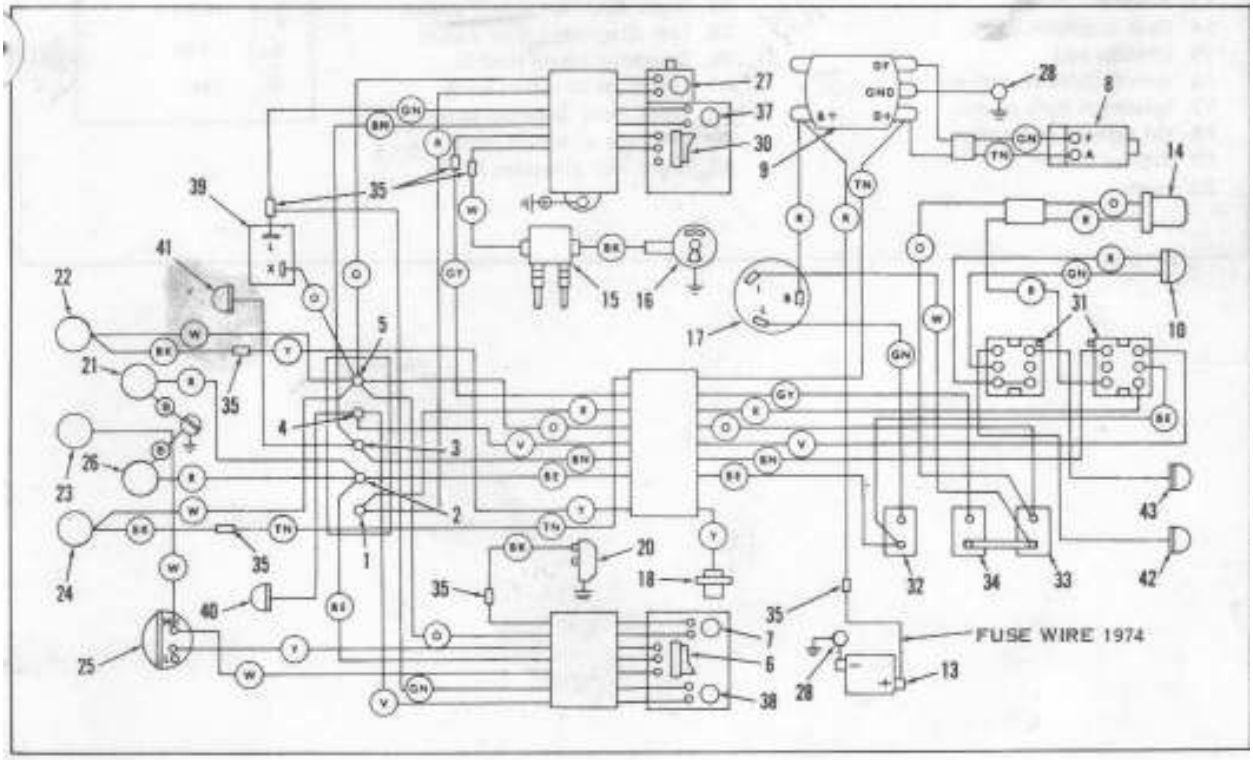

Figure 5-2F. Wiring Diagram, 1973-74 Model XLCH

KEY FOR WIRING DIAGRAMS (Figures 5-2G and 5-2H)

1. Headlamp housing
2. Socket plug combination
3. Socket plug combination
4. Socket plug combination
5. Wiring harness
6. Headlamp dimmer switch
7. Horn switch
8. Generator "F" and "A" terminals
9. Regulator
   "BAT" or B+ terminal
   "GEN" or D+
   "F" or DF terminal
10. Tail lamp
11. Starter motor
12. Starter solenoid
13. Battery
14. Rear stoplight switch
15. Ignition coil
16. Ignition breaker (timer)
17. Ignition – light switch
18. Oil signal light switch
19. Starter button
20. Horn
21. Speedometer light
22. Oil signal light
23. High beam indicator light
24. Generator indicator light
25. Headlamp socket
26. Tachometer light
27. Front stoplight switch
28. Crankcase bolt
29. Starter relay
30. Engine stop switch
31. Rear harness connector
32. Lighting circuit breaker
33. Accessory circuit breaker
34. Ignition circuit breaker
35. Connector
37. Right direction signal switch
38. Left direction signal switch
39. Direction signal flasher
40. Left front direction lamp
41. Right front direction lamp
42. Left rear direction lamp
43. Right rear direction lamp

KEY TO COLOR CODE	
B	BLACK
W	WHITE
O	ORANGE
R	RED
G	GREEN
Y	YELLOW
V	VIOLET
BE	BLUE
BN	BROWN
GY	GRAY
TN	TAN

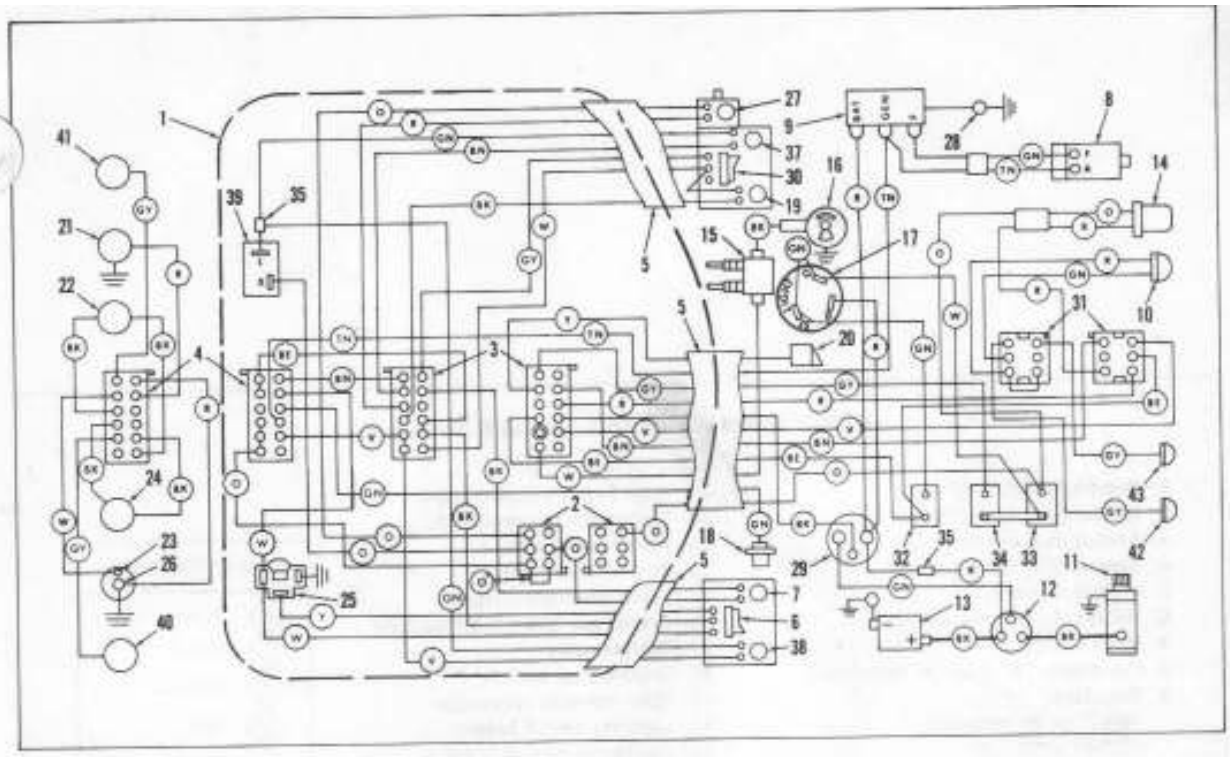

Figure 5-2G. Wiring Diagram, 1975 and 1976 Model XL

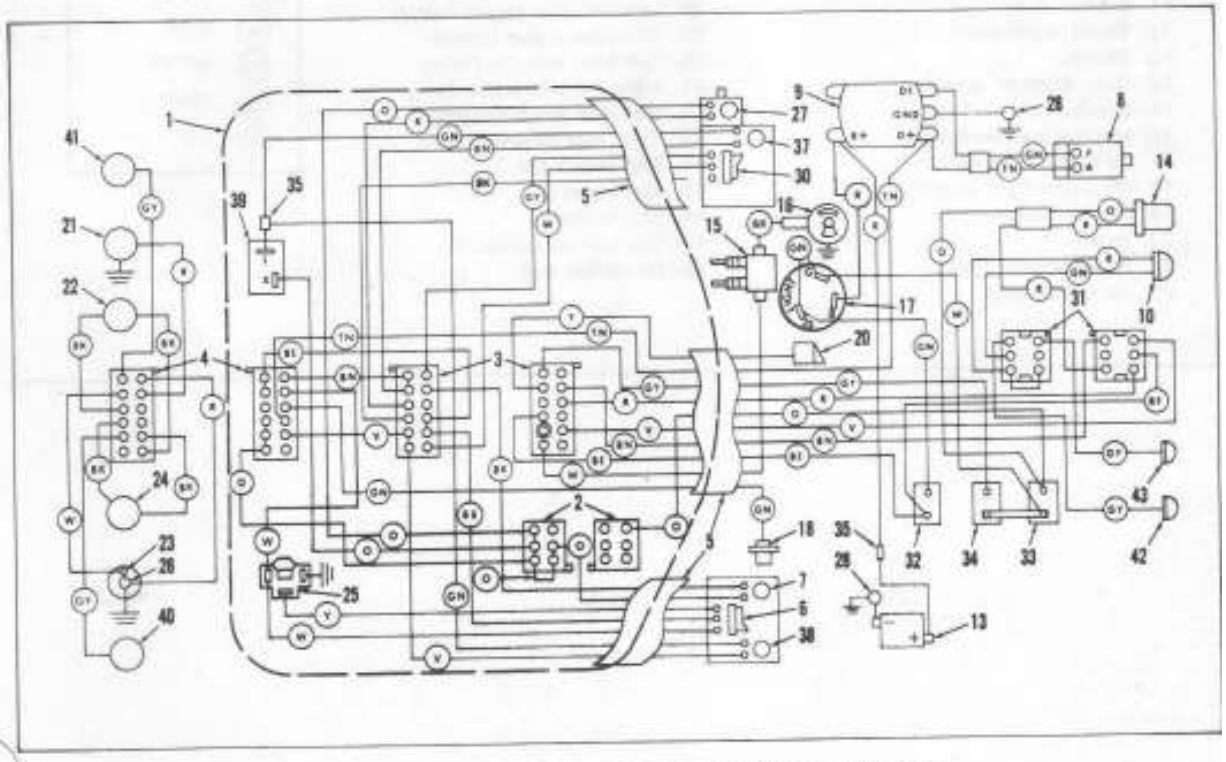

Figure 5-2H. Wiring Diagram, 1975 and 1976 Model XLCH

KEY FOR WIRING DIAGRAMS (Figures 5-2I and 5-2J)

1. Headlamp housing
2. Socket plug combination
3. Socket plug combination
4. Socket plug combination
5. Wiring harness
6. Headlamp dimmer switch
7. Horn switch
8. Generator "F" and "A" terminals
9. Regulator
   "BAT" or B+ terminal
   "GEN" or D+
   "F" or DF terminal
   "GND" terminal
10. Tail lamp
11. Starter motor
12. Starter solenoid
13. Battery
14. Rear stoplight switch
15. Ignition coil
16. Ignition breaker (timer)
17. Ignition - light switch
18. Oil signal light switch
19. Starter button
20. Horn
21. Speedometer light
22. Oil signal light
23. High beam indicator light
24. Generator indicator light
25. Headlamp socket
26. Tachometer light
27. Front stoplight switch
28. Crankcase bolt (under battery)
29. Starter relay
30. Engine stop switch
31. Rear harness connector
32. Lighting circuit breaker
33. Accessory circuit breaker
34. Ignition circuit breaker
35. Connector
37. Right direction signal switch
38. Left direction signal switch
39. Direction signal flasher
40. Left front direction lamp
41. Right front direction lamp
42. Left rear direction lamp
43. Right rear direction lamp
44. Tag, brown (R)
45. Tag, violet (L)
46. Bolt to frame
47. Main circuit breaker
48. Handlebar bolt

KEY TO COLOR CODE	
B	BLACK
W	WHITE
O	ORANGE
R	RED
G	GREEN
Y	YELLOW
V	VIOLET
BE	BLUE
BN	BROWN
GY	GRAY
TN	TAN

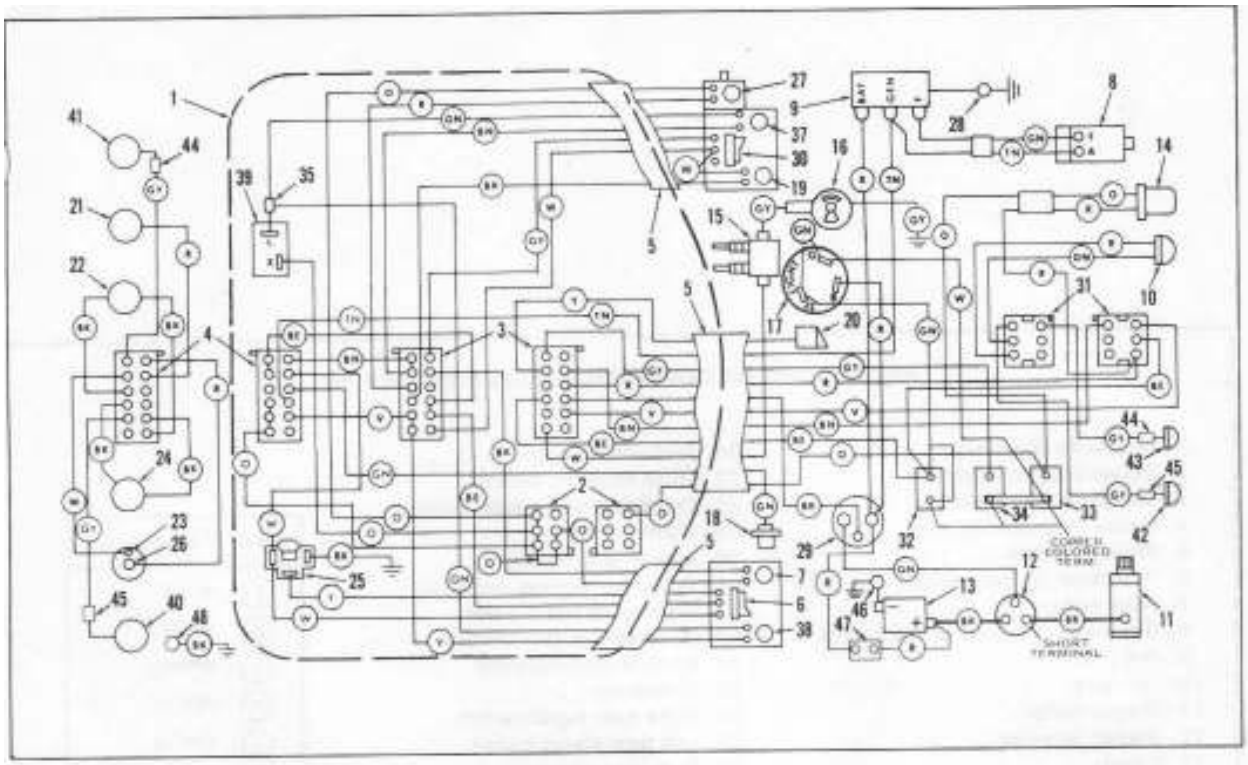

Figure 5-2I. Wiring Diagram, 1977 Model XL

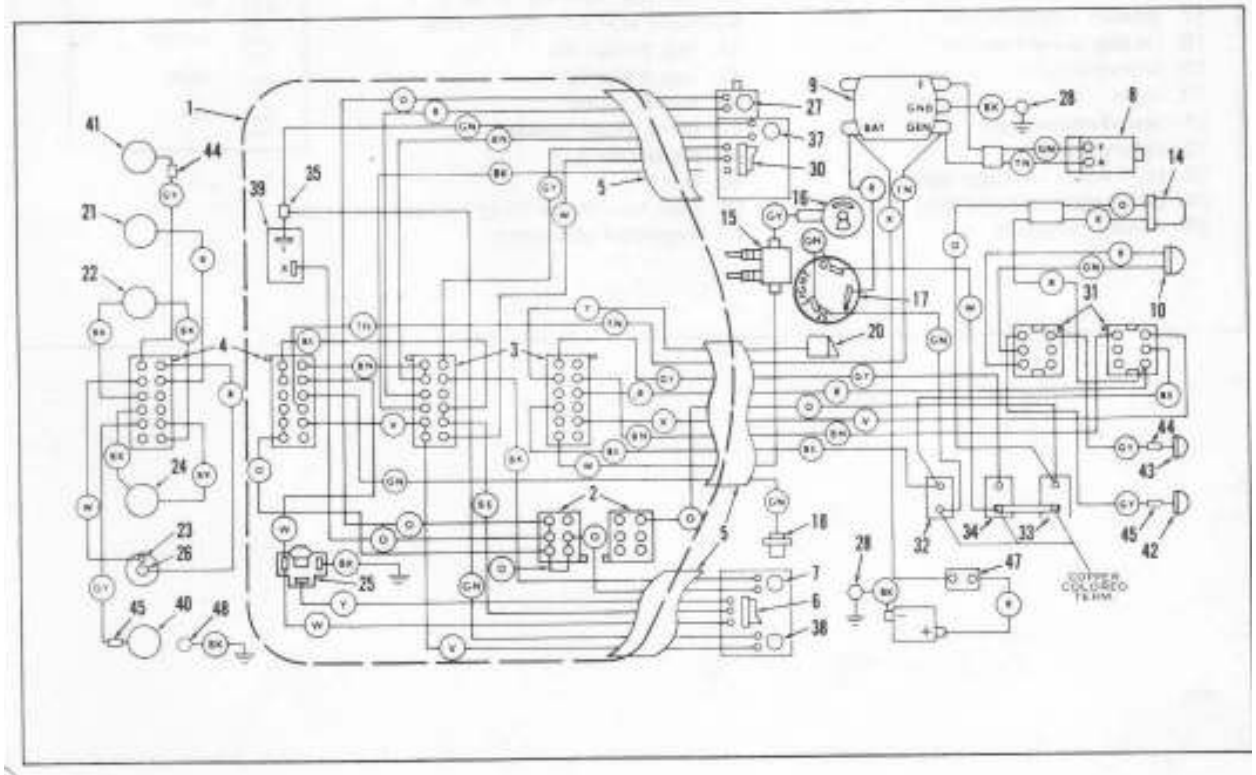

Figure 5-2J. Wiring Diagram, 1977 Model XLCH

KEY FOR WIRING DIAGRAMS (Figures 5-2K and 5-2L)

1. Headlamp housing
2. Socket-plug combination
3. Socket-plug combination
4. Socket-plug combination
5. Wiring harness
6. Headlamp dimmer switch
7. Horn switch
8. Generator "F" and "A" terminals
9. Regulator
10. Tail lamp
11. Starter motor
12. Starter solenoid
13. Battery
14. Rear stoplight switch
15. Ignition coil
16. Ignition breaker (timer)
17. Ignition – light switch
18. Oil signal light switch
19. Starter button
20. Horn
21. Speedometer light
22. Oil signal light
23. High beam indicator light
24. Generator indicator light
25. Headlamp socket
26. Tachometer light
27. Front stoplight switch
28. Crankcase bolt (under battery)
29. Starter relay
30. Engine stop switch
31. Tail lamp harness connector
32. Lighting circuit breaker
33. Accessory circuit breaker
34. Ignition circuit breaker
35. Connector
37. Right turn signal switch
38. Left turn signal switch
39. Turn signal flasher
40. Left front turn signal lamp
41. Right front turn signal lamp
42. Left rear turn signal lamp
43. Right rear turn signal lamp
44. Tag, brown (R)
45. Tag, violet (L)
46. Bolt to frame
47. Main circuit breaker
48. Handlebar bolt
49. Diode
50. Rear turn signal lamp harness connector
51. Regulator connector

KEY TO COLOR CODE	
B	BLACK
W	WHITE
O	ORANGE
R	RED
G	GREEN
Y	YELLOW
V	VIOLET
BE	BLUE
BN	BROWN
GY	GRAY
TN	TAN

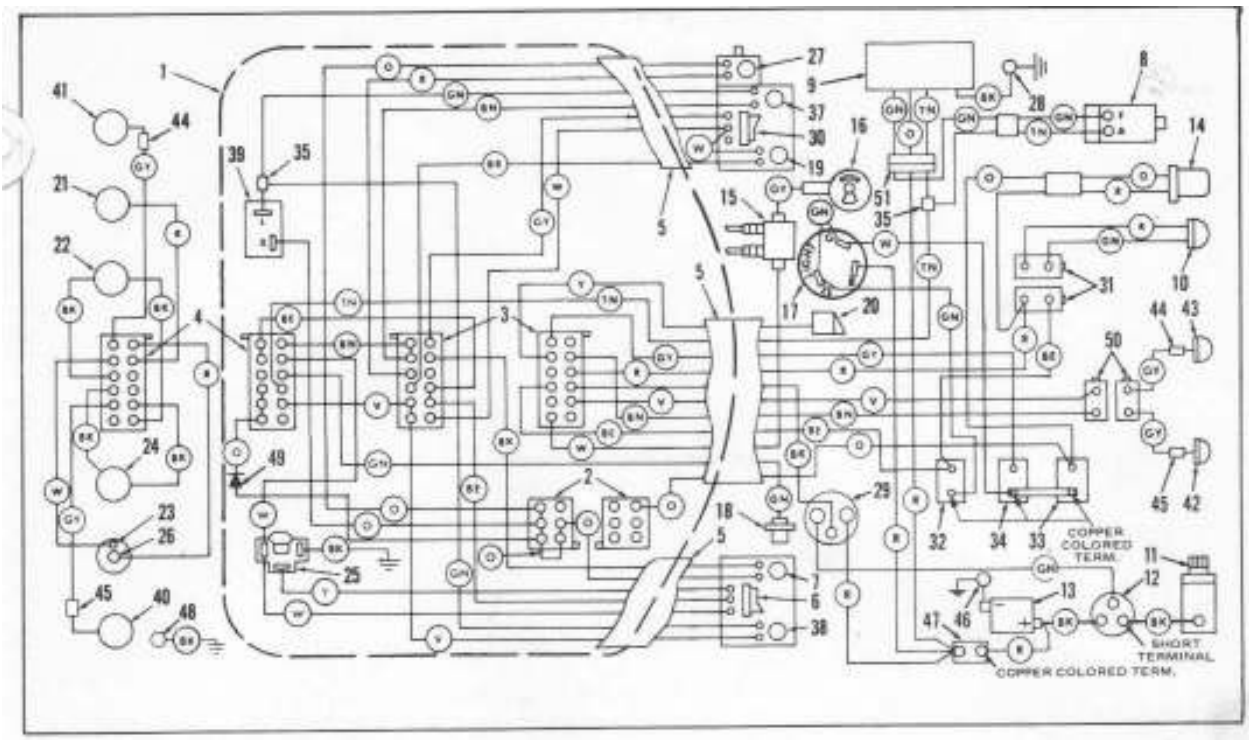

Figure 5-2K. Wiring Diagram, 1978 Model XLH

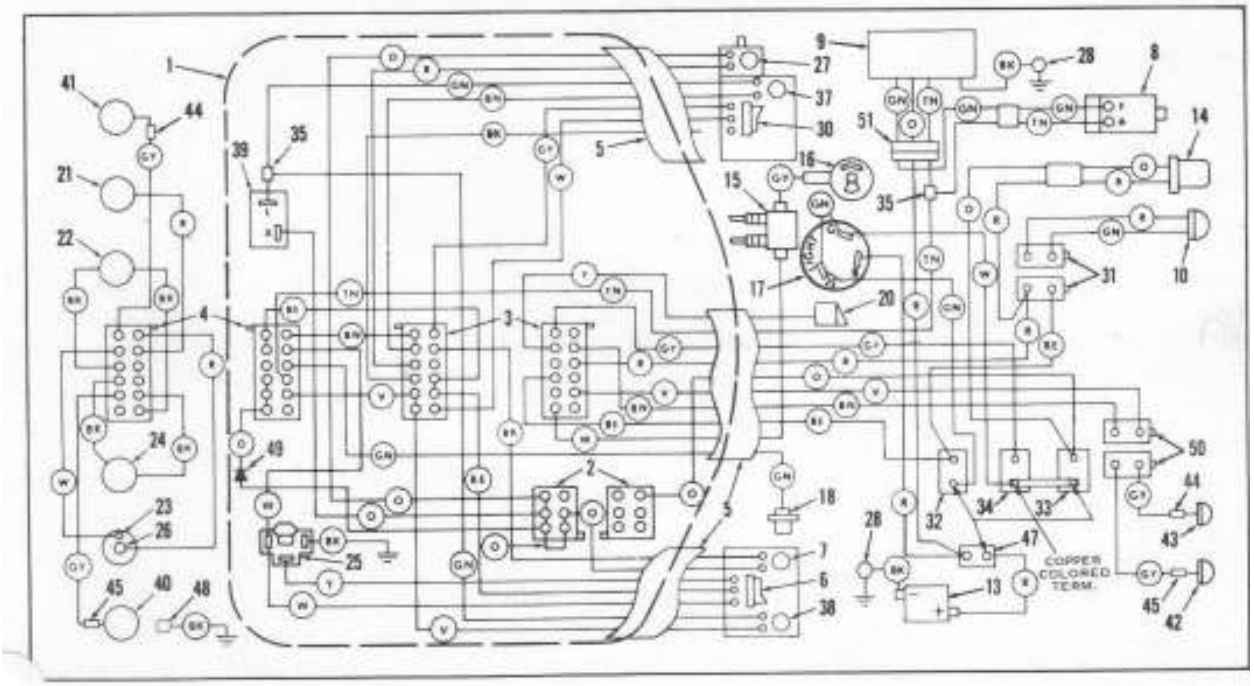

Figure 5-2L. Wiring Diagram, 1978 Model XLCH

BUTTON SWITCH (Figure 5-3)

This type switch is used for momentary closing of circuits to horn, magneto or starting motor and is located on handlebar. Terminal has either one or two wires.

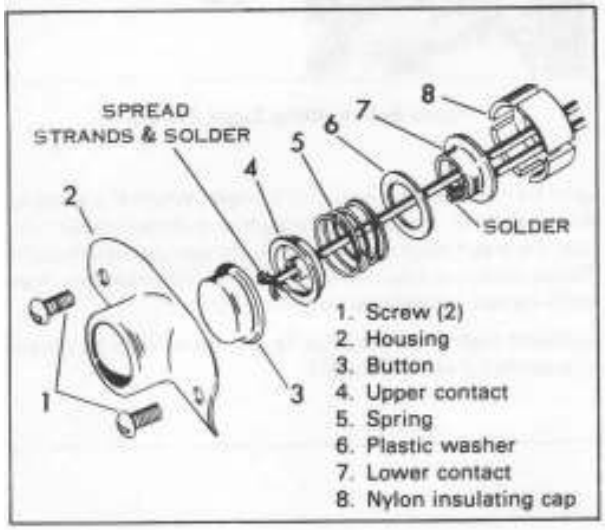

Figure 5-3. Button Switch (1970 to 1972) - Exploded View

To disassemble switch, remove screws (1, Figure 5-3) from housing. Pull remaining parts from housing as an assembly.

To replace the switch wires, unsolder or cut wires from contacts. The wire ends should have about 1/4 inch of insulation stripped off.

Lead one wire through cup, lower contact, plastic washer and spring to upper contact. Be sure parts are arranged as shown. Insert one wire end through center of upper contact, spread strands out flat over contact and solder. Lead second wire through cup and solder to lower contact.

Insert button and assembled parts in housing and reinstall switch on handlebar.

HANDLEBAR SWITCH ASSEMBLY - 1973 AND LATER (Figure 5-4, 5-5)

The left handlebar switch assembly, contains a rocker arm switch (Headlamp hi-lo beam) and two pushbutton switches (Horn and left turn signal). The right handlebar switch assembly contains a rocker arm switch (emergency engine cut-off) and two pushbutton switches (engine start and right turn signal). Individual rocker arm and pushbutton switches can be replaced if defective.

To replace individual switches, remove four screws (1) and pull off cover (2) assemblies. Remove screws (3) and rocker switches (4 and 5) or screws (6), retainer (7) and pushbutton switch (8) as needed. Reassembly is the reverse of disassembly.

1. Screw
2. Switch housing cover
3. Screw
4. Rocker switch (Hi-Lo)
5. Rocker switch (Run-Off)
6. Screw
7. Retainer
8. Pushbutton switch
9. Rubber cap
10. Stop light switch
11. Washer
12. Button cap

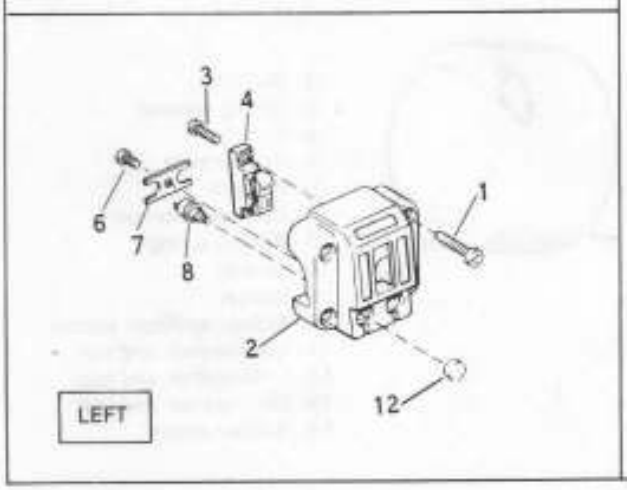

Figure 5-4. Handlebar Switch Assembly Left (1973 and Later)

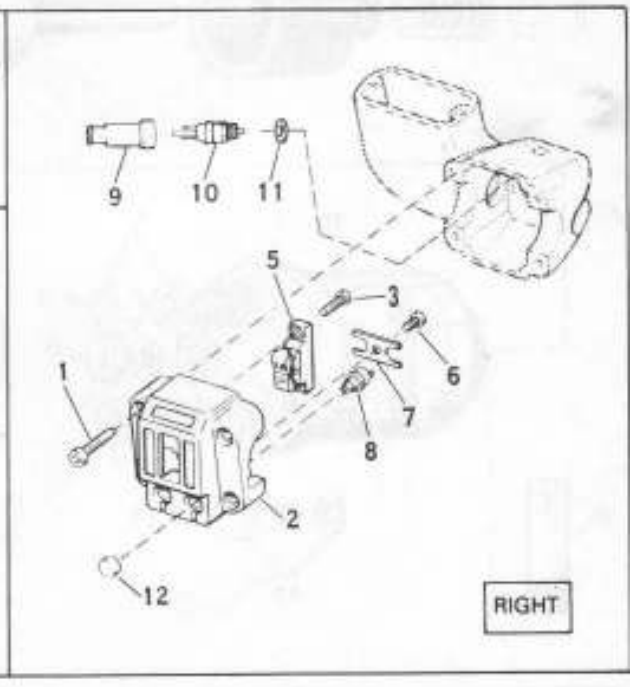

Figure 5-5. Handlebar Switch Assembly Right (1973 and Later)

STOPLAMP FRONT BRAKE SWITCH (Figure 5-5)

To replace stop light switch in right handlebar assembly, remove cover (2) and rubber cap (9). Disconnect wires and unscrew switch (10) and washer (11) from housing. Switch parts are not serviceable. Switch must be replaced as a unit.

IGNITION - LIGHT SWITCH (Figure 5-6)

The combination ignition - light switch is a three position switch. The vertical position is OFF. For U.S.A. operation, the next two clockwise positions are ignition and headlight. Key will lock ignition in OFF position only. Switch must be replaced as a unit.

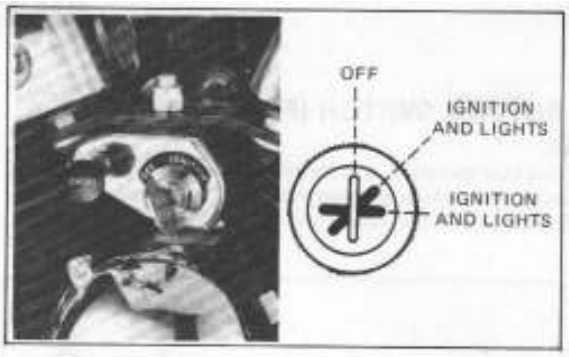

Figure 5-6. Ignition Light Switch

STARTER SOLENOID SWITCH (Figure 5-7)

Solenoid switches are designed to close and open electrical circuits electro-magnetically. Switches of this type consist basically of contacts and a winding around a hollow cylinder containing a movable plunger. When the winding is energized by the battery through an external control circuit, the magnetism produced pulls the plunger into the coil. The contact disc attached to the plunger moves against two main switch contacts closing the circuit.

Solenoid switch individual parts are replaceable as shown in exploded view, Figure 5-7.

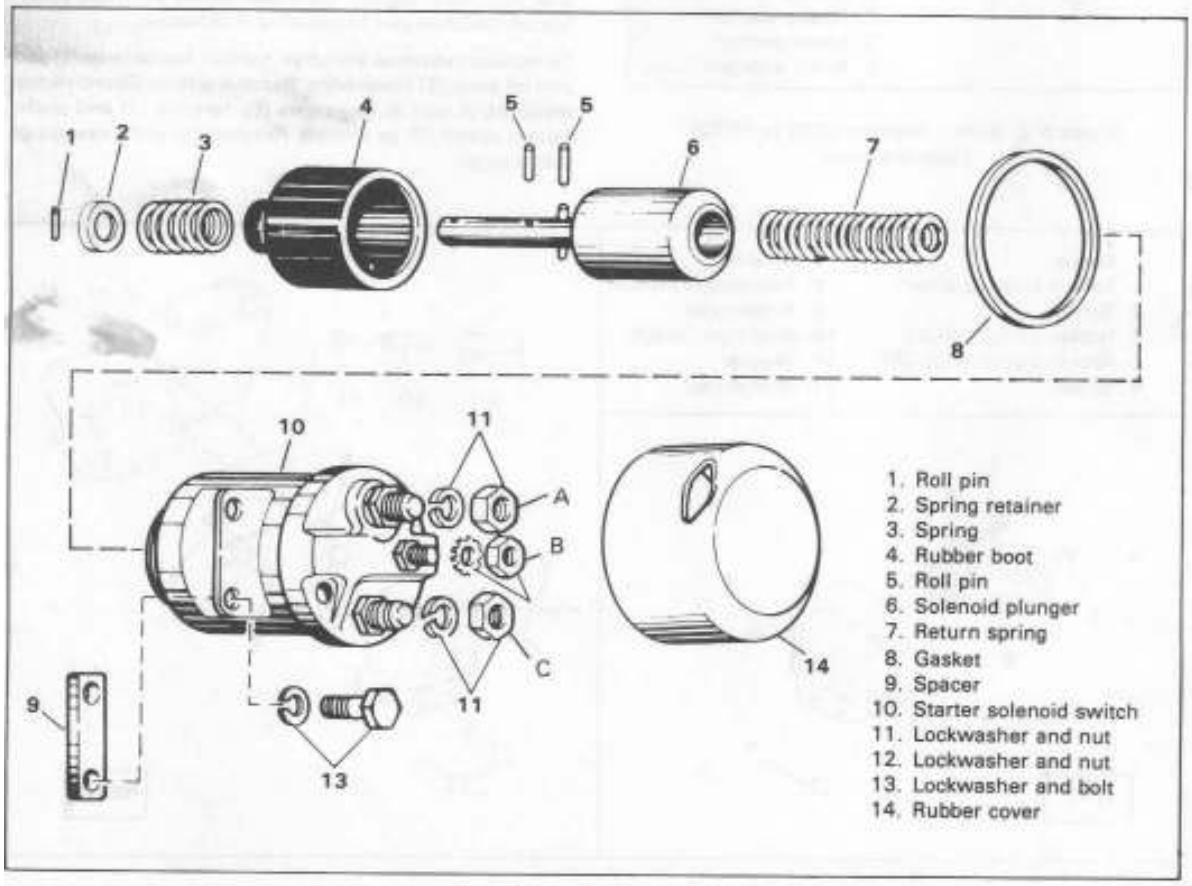

Figure 5-7. Solenoid - Exploded View

The control circuit wire from handlebar starter button is connected to small terminal stud (2, Figure 5-9). Battery cable must be connected to the large, longest stud (3, Figure 5-9) and starter motor cable is connected to the large, shorter stud (1, Figure 5-9). If cables are reversed, solenoid coils will remain in circuit and drain battery.

When it is suspected that a solenoid switch is defective, tests should be made of the solenoid coil winding and continuity through the main switch when contacts are in closed position. Using the test circuit described, these two tests can be made simultaneously.

With solenoid disconnected from control circuit, battery and motor and with plunger in place, make test circuit connections as follows: (See Figure 5-8.)

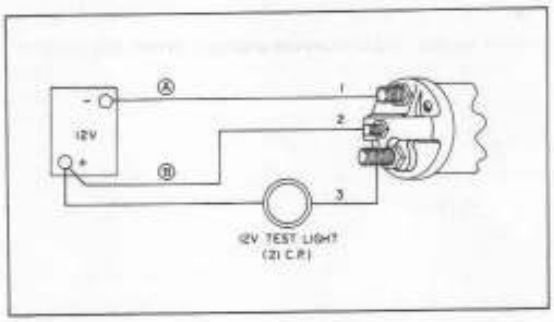

Figure 5-8. Test Circuit

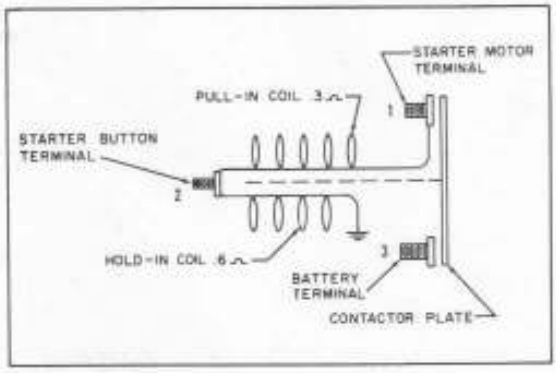

Figure 5-9. Solenoid Internal Wiring Diagram

Since solenoid coil requires 12 volts to actuate plunger closing main switch contacts, use a 12 volt battery. Leads A and B are connected to terminals 1 and 2 (coil terminals) to actuate solenoid. A sharp click should be heard from the solenoid switch when making this condition. No click or a heavy spark at the terminals when connecting wires would indicate either an open or short in the solenoid winding and solenoid switch must be replaced. If the solenoid winding checks good and plunger does close main switch contacts, there is still a possibility contacts are badly burned or corroded and will not pass heavy current.

To test continuity on the main contacts, connect a test bulb of at least 21 CP (12 volts) between terminal 3 and battery positive post and repeat previous test. A bright glow of the test bulb indicates main switch contacts are passing current.

STARTER RELAY SWITCH

The starter relay switch is a solenoid switch controlled by the starter button on the right handlebar. Its purpose is to increase the current supply for operating the starter solenoid. Internal wiring diagram is shown in Figure 5-10.

Figure 5-10 shows a test circuit using a 12 volt battery and stop lamp bulb. Contacts should close and bulb should light when connection is made at positive post of battery and should go out when connection is broken. Switch parts are not serviceable. Switch must be replaced as a unit.

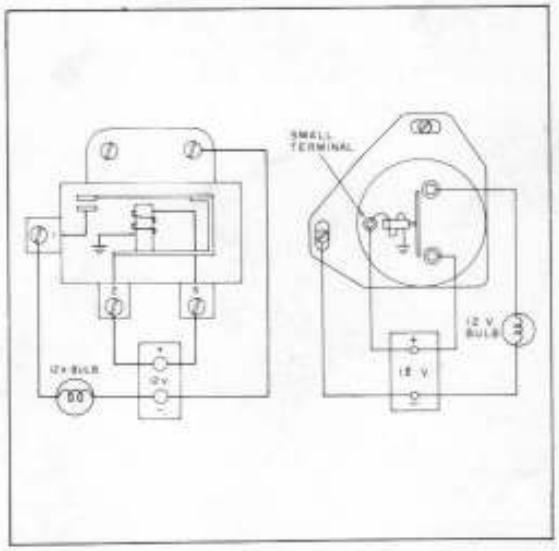

Figure 5-10. Starter Relay Internal Wiring Diagram and Test Circuit

CIRCUIT BREAKERS

To protect the motorcycle wiring, there are four circuit breakers: main, lighting, accessory and ignition.

They are located on the frame in front of the battery and are accessible by removal of the seat and/or battery.

Each of these breakers is self-resetting and automatically returns steady power to the circuit when an electrical fault that causes it to trip is found and corrected. If the electrical fault is not found and corrected, the breaker cycles on and off causing the motorcycle to operate erratically and eventually the battery will lose its charge.

LAMPS

HEADLAMP

The headlamp is a sealed beam type, specially designed and made for Harley-Davidson motorcycles. When replacement is required, use only the prescribed sealed beam unit. If either filament burns out, or the lens breaks, the entire unit must be replaced.

To remove sealed beam unit, remove screw from outer clamping ring. Pry unit from rubber mounting and pull connector block from unit prongs.

Assembly is the reverse order of disassembly. Be sure connector block contacts are clean to ensure a good electrical contact. After final assembly, readjust headlamp as described under "ADJUSTING BEAM."

Headlamp mounting nut is located under snap plug on mounting bracket.

ADJUSTING BEAM

To get the greatest efficiency from the headlamp and to meet the requirements of the law, correctly adjust headlamp beam according to the following instructions.

Draw a horizontal line on a wall or screen exactly the same height as the center of the headlamp to be checked and adjusted. Then, position the motorcycle on a level surface with headlamp approximately 25 feet away from the test pattern. Have a rider sit on the motorcycle to simulate actual running conditions. Motorcycle must be vertical with front wheel in straight ahead alignment and tires correctly inflated. Aim the headlamp directly at the screen and turn on the light switch. Set beam selector switch on the high beam position, and check beam for height and direction.

The top of the main beam of light should register even with, but no higher than the horizontal line of the test pattern.

To aim beam, loosen the headlamp mounting nut and position the lamp to correctly adjust the beam of light in relation to the horizontal line. At the same time, turn the headlamp right or left to direct the beam of light straight ahead. Tighten the clamp nut after the lamp is correctly adjusted.

BULB CHART

Lamp Description	Bulbs Rqd.	Candle Power or Wattage	Harley-Davidson Part Number
		12 V.	
Headlamp Hi Beam Lo Beam	1	45 Watts 35 Watts	67717-65
Tail Lamp Tail Lamp Stoplight	1	4 C.P. 32 C.P.	68165-64
Generator/Oil Pressure Signal Lights	1	4 C.P.	68536-70 (1970 to early 1972) 68536-72 (late 1972 to 1974) 68536-75 (1975 to 1978)
High Beam Indicator	1	2 C.P.	71092-68 (1970 to 1974) 71090-64 (1975 to 1978)
Speedometer/Tachometer Lights	1	2 C.P.	71090-64
ACCESSORIES			
Turn Indicator Lamps	4	3 C.P. 32 C.P.	68166-64 (1970 to early 1973) 68572-64A (late 1973 to 1978)

GENERATOR

The standard generator is a direct current two pole, two brush unit with charging rate governed entirely by a voltage regulator. The regulator functions to increase charging rate when the battery charge is low or current is used, and to decrease charging rate when no current is being used and the battery is nearing full charge.

CHECKING GENERATOR

It is possible to troubleshoot faulty generator without removing the generator from the engine or, if necessary to remove it, without completely disassembling the generator. When a generator stops charging or not charging at a satisfactory rate as evidenced by a "dead" battery or signal light on switch panel remaining lighted, it is recommended that unless the trouble is known definitely, the following checking sequence be used:

Make certain the generator signal light circuit is not grounded. Remove the wire or wires from the regulator terminal (on 1977 and earlier models, terminal marked D+ or "GEN") and position so contact is not made with motorcycle. Turn ignition on. If generator light on instrument panel goes on, light circuit is grounded and may be reason for the generator not charging. If this circuit is grounded the condition must be corrected. If the generator signal light circuit tested O.K. or if a grounded condition has been corrected, proceed to testing generator output.

TESTING GENERATOR OUTPUT (See Figure 5-13)

Remove wire from "F" terminal of generator. Connect a short jumper wire from generator "F" terminal to ground on motorcycle. Remove wire or wires from generator "A" terminal and connect the positive lead of a 0-30 ampere ammeter. Start engine and run at a speed of 2000 rpm (approximately 40 mph). Then momentarily connect negative lead of ammeter to motorcycle battery positive terminal. If the ammeter reads 10 amperes or more for a 12 volt generator, generator is not at fault. Therefore, the difficulty is in the regulator or wiring circuit. (See "VOLTAGE REGULATOR.") If generator shows no charge or charge below minimum rate, it must be removed for further checking.

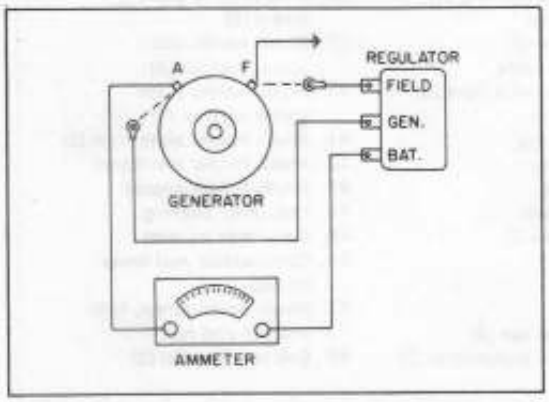

Figure 5-11. Generator Output Test Wiring Diagram

IMPORTANT

Do not ground regulator "F" (XLH) or "BT" (XLCH) terminal to check output without first disconnecting wires from terminal or damage to regulator will result.

Avoid running with generator field grounded for extended periods. Disconnect ammeter lead from battery before stopping engine to avoid discharging battery through generator.

CAUTION — It is advisable to "Flash" field coils whenever wires have been removed from generator or regulator; or after generator or battery has been removed and is reinstalled. This is done to make sure generator has correct polarity. (See "POLARIZING GENERATOR", pages 5-27.)

REMOVING GENERATOR

Disconnect red wires from "BAT" terminal on voltage regulator. Disconnect wires from generator "F" and "A" terminals.

Remove two long screws through timing gearcase cover that secure generator to gearcase.

Remove generator from chassis out left side of motorcycle.

INSPECTING BRUSHES (Figure 5-12)

Inspect brushes to make certain they are not worn out, broken or gummy and sticking in brush holders.

Remove commutator end cover nuts (7), washers (8), and frame screws (9).

Pry or gently tap commutator end cover (10) off frame and armature shaft. Remove brush holder mounting plate (13) from frame. Disconnect both black brush wires and generator positive brush cable from brush holder terminals.

Remove brushes from brush holders and clean brush holders with cleaning solvent. Blow dry with compressed air. Replace brushes when longest side of brush measures 1/2 in. or less. Seat new brushes with a brush seating stone.

TESTING FIELD COILS (Figure 5-13)

Internal connections of generator field coils to brushes and terminals are shown in Figure 5-13.

Arrange an ammeter and battery in series with test points connected to leads.

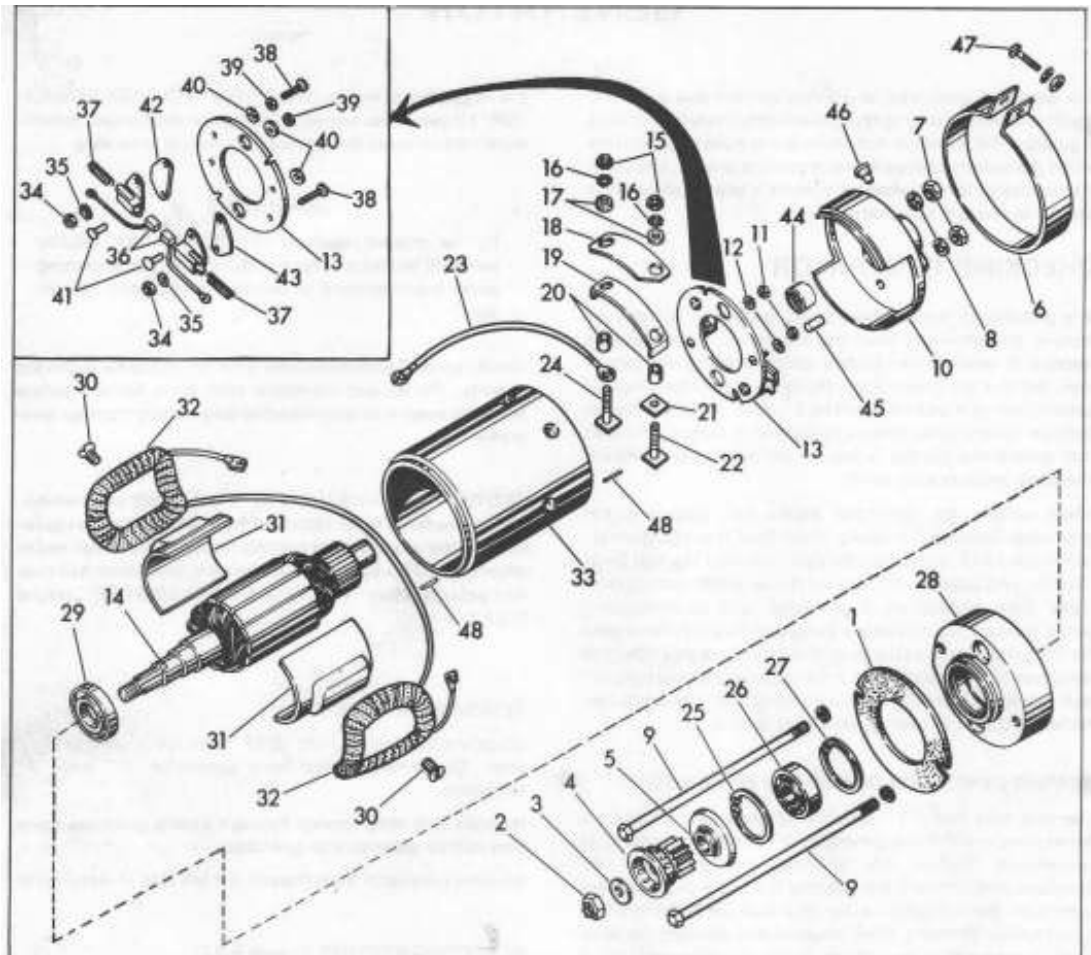

1. Mounting gasket
2. Gear shaft nut
3. Gear shaft washer
4. Drive gear
5. Drive end oil deflector
6. Brush cover strap
7. Commutator end cover nut (2)
8. Commutator end cover washer (2)
9. Frame screw (2)
10. Commutator end cover
11. Brush cable nut (2)
12. Brush cable washer (2)
13. Brush holder mounting plate
14. Armature
15. Terminal screw nut (2)
16. Terminal screw lockwasher (2)
17. Insulating washer (2)
18. Terminal insulator
19. Terminal bolt clip
20. Terminal screw bushing (2)
21. Bracket insulator
22. Terminal screw (2)
23. Positive brush cable
24. Terminal screw (see item 22)
25. Bearing retainer
26. Armature bearing
27. Bearing retainer
28. Drive end plate
29. Armature oil seal
30. Pole shoe screw (2)
31. Pole shoe (2)
32. Field coil (2)
33. Frame
34. Terminal screw nut (2)
35. Terminal screw lockwasher (2)
36. Brush (2)
37. Brush spring (2)
38. Brush holder plate screw (2)
39. Brush holder plate screw washer (2)
40. Brush holder plate screw washer (3)
41. Brush holder plate rivet (2)
42. Brush holder insulation
43. Brush holder spacer
44. End cover bearing
45. Generator oil wick
46. Commutator end cover oil cup
47. Brush cover screw, lockwasher and nut
48. End locating pin (2)

Figure 5-12. Generator - Exploded View

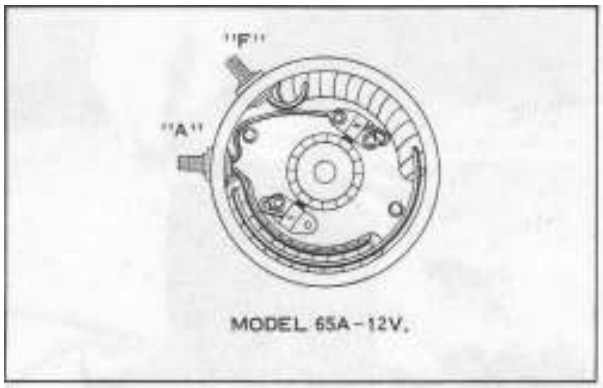

Figure 5-13. Generator Wiring Diagram

NOTE

All 12 volt generators are stamped "12V" following model no. on frame. Use a 12 volt battery for testing 12 volt generators. During all tests be particularly careful to avoid overloading or shorting ammeter. An overload is indicated by the needle going beyond range of calibrated scale. A direct short is indicated by needle swinging violently to extreme limit of its travel. In either case, contact must be broken instantaneously to avoid damaging the ammeter. In making the following tests, first make only a flicking, momentary contact to determine if a short is present. If ammeter needle does not go beyond calibrated scale, it is safe to make continuous contact. As added precaution, work on a bench with a nonconductive top. Never touch test points together.

1. Remove brushes or insulate brushes from commutator. Touch one test lead to "F" terminal and the other to any part of the generator frame. There should be no reading. Move first terminal lead to "A" terminal. A reading at either contact indicates a terminal or field coil is grounded to frame. If no reading was obtained, follow further disassembly procedure and eliminate step 2.

Remove generator drive gear using Gear Puller, Part No. 95715-19A.

Press armature out of ball bearing with arbor press and remove. Disassemble terminals, remove field coil leads, inspect terminal components for cracked or worn through insulating materials and, if parts appear serviceable, reassemble terminal components eliminating field coil leads.

2. Recheck terminal to ground contacts as described in step 1. No reading indicates terminals are properly insulated. If reading was obtained in step 1, but not in step 2, field coils are probably grounded.

3. Touch one test lead to either field coil lead and the other to the generator frame. A reading indicates a field coil is grounded and it is necessary to clip the connection between the field coils. Touch test leads to one field coil lead and ground. Repeat process on other coil. A reading indicates a grounded coil which will have to be replaced. If terminals and field coils are in serviceable condition, proceed to step 4.

4. Test field coils, using a 12 volt battery for 12 volt generator, touching test leads to coil lead terminals. Current value should be 2.3 amp. No reading indicates an open coil, a higher reading indicates a shorted coil.

5. Strip back the insulation at point where two field coil leads are joined and file the insulating varnish off a spot on the splice. Connect one test lead at this point, the other at either coil lead. Without moving first test lead, move second test lead to opposite free lead. Current value should be 4.6 amperes (single coil). No reading indicates an open coil, a higher reading indicates a shorted coil. Faulty parts must be replaced.

6. Touch one test lead to brush holder mounting plate, the other to positive (insulated) brush holder. A reading indicates a shorted holder. Clean thoroughly and recheck. If reading is obtained, replace brush holder mounting plate. Check negative brush holder to be sure it is tight and well grounded.

If field coils, brush holders and generator terminals are serviceable, the trouble is probably in the armature.

Do not remove pole shoes and field coils unless tests previously made proved one or both of the coils to be faulty. When a pole shoe must be removed to replace a field coil, follow the procedure described in "DISASSEMBLING GENERATOR."

TESTING ARMATURE

Test for Ground (Figure 5-14). If growler with test leads is available, test by touching armature core with one test lead and commutator segments, individually, with the other. If this means of testing is not available, test with battery, ammeter and leads as used for testing field coils. Contact commutator segments with one test point and armature core with the other. If circuit is completed, armature is grounded.

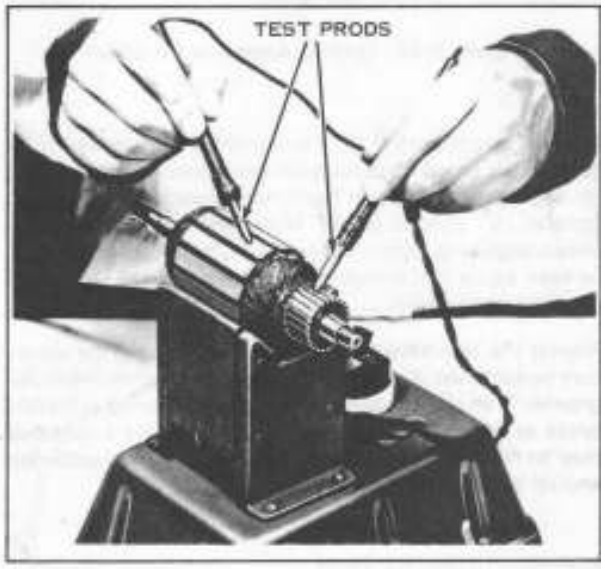

Figure 5-14. Checking Armature for Grounded Winding

If armature is found to be grounded, make sure commutator is free from carbon and copper dust deposits. After cleaning thoroughly between segments and at ends of commutator and blowing dry with compressed air, repeat test. Armature must be replaced if ground is still present.

Test for Short (Figure 5-15). Place armature in growler and hold piece of hacksaw blade parallel to and in loose contact with armature core. Turn growler on. Rotate armature slowly several turns. The hacksaw blade will be attracted to the armature core and will vibrate at one or more points if armature is shorted.

If short is found, clean commutator segments as described above under "Test for Ground." If short still exists, armature must be replaced.

Figure 5-15. Testing Armature for Short

Test for Open (Figure 5-16). Place armature in growler. Turn growler on. Insert tip of hacksaw blade between commutator segments that are in horizontal alignment with top of growler "V" shaped cradle. Make and break contact between segments with hacksaw blade. A strong flash should be seen as contact is broken. No flash or a weak flash indicates an open circuit.

Repeat the test between all segments, turning the armature so each test is made in the same position relative to the growler. If an open circuit is found, check for loose or broken wires at commutator connections. If none are found that may be repaired, armature must be replaced. All soldering should be done with rosin flux.

REPAIRING COMMUTATOR

A generator that has been in extended service may fail to deliver enough current to keep the battery in a charged condition although its field coil and armature windings are in serviceable condition. In such cases the commutator and/or brushes are usually at fault. If the commutator has been worn down until the mica separations between segments are no longer undercut or recessed, the commutator probably is grooved noticeably in path of brush travel and no slot between commutator segments exists, causing the brushes to ride high and make only intermittent contact with commutator.

Figure 5-16. Testing Armature for Open Circuit

The commutator may be turned down in a lathe and sanded with fine sandpaper until true and smooth. Mount armature in lathe on its bearing seats not on shaft centers. Never sand a commutator with emery cloth. Particles will imbed themselves in the copper surface, holding the brushes off the commutator far enough to cause heavy arcing and burning.

After commutator has been turned down, the mica insulation between segments must be recessed or undercut approximately .025 in. Undercutting is usually done with a special undercutting machine. If one is not available, satisfactory undercutting may be done with a piece of hacksaw blade. Carefully thin down blade width, if necessary, until offset saw teeth are the same width as slots in commutator. Slots must be square-bottomed for good results. See Figure 5-17.

Sand commutator surface on lathe and repeat growler test to be sure there are no copper particles between segments.

Open circuited armatures can often be repaired. The break or opening in the circuit usually occurs at the commutator riser bars, a result of overloading the generator which causes overheating and the melting of solder at the joint. Resolder the leads in the riser bars using rosin flux. Turn down commutator and sand to remove any burn spots as described in previous paragraph.

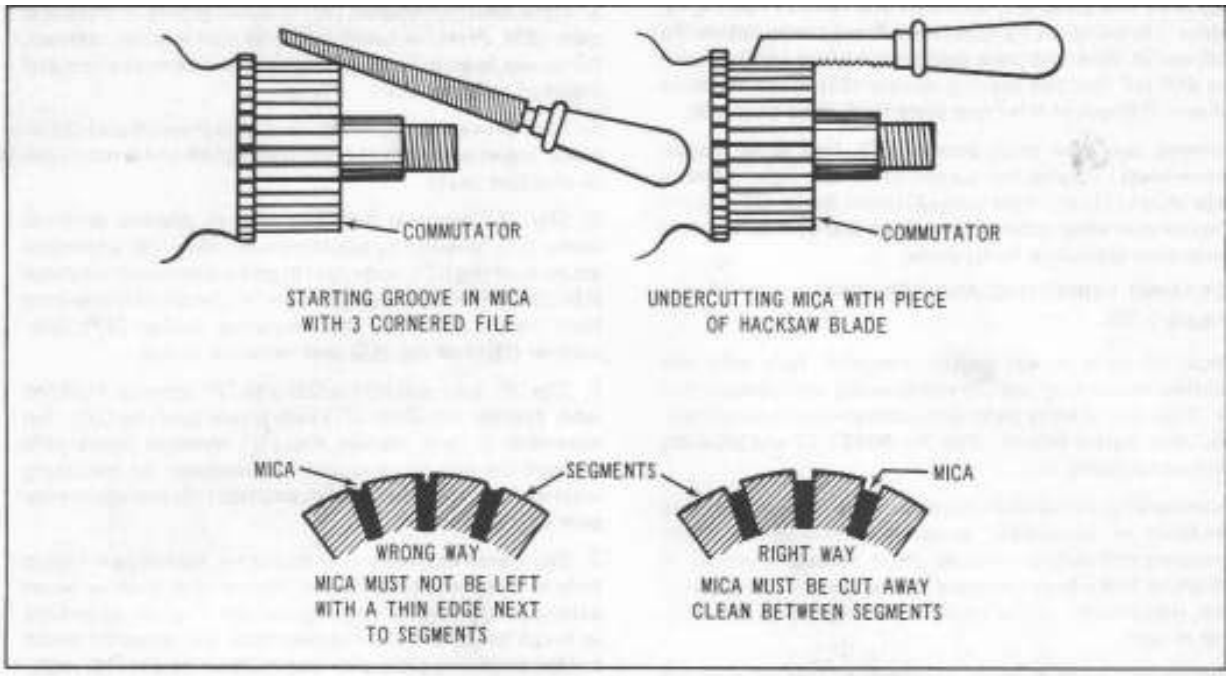

Figure 5-17. Recessing Mica Separators

POLARIZING GENERATOR

Assemble generator as described in "ASSEMBLING GENERATOR." After a generator has been repaired, it must be repolarized to make sure that it has the correct polarity for charging in the right direction.

A generator that is put into service with the wrong polarity may result in burned relay points, a dead battery and damage to the generator.

NOTE

For 1977 and earlier models, polarize the generator by momentarily connecting the "BAT" and "GEN" terminals with a jumper wire.

Polarize the generator by momentarily connecting the "BAT" and "GEN" terminals with a jumper wire.

1. Generator on bench: Connect the positive terminal of a battery to the armature terminal of the generator. Then, momentarily connect the negative battery terminal to the generator field terminal.

2. Generator on motorcycle and connected to regulator: Connect one end of a jumper wire to the generator armature terminal. Momentarily touch the other end of the jumper wire to the positive terminal of the battery. This restores the magnetism. Remove jumper.

3. Loss of remanent magnetism: Sometimes a DC generator looses its remanent magnetism. This manifests itself by a total lack of output current. Remedy as in 2 above.

CAUTION — DO NOT ground the generator field terminal for longer than 10 seconds when the engine is running as this may damage the regulator or generator.

GENERATOR CHARGING RATE

After a generator has been repaired, assembled, installed on motorcycle, connected and polarized, it may be checked for maximum output. That is, the maximum, uncontrolled amperage output range may be checked to determine the success of the repair work. This test is described in previous paragraph "TESTING GENERATOR OUTPUT." This test will not, however, indicate if the battery and generator are being protected by proper regulator function. See "VOLTAGE REGULATOR."

DISASSEMBLING GENERATOR (Figure 5-12)

Remove generator from engine gearcase as described in "REMOVING GENERATOR."

Remove gasket (1). Remove gear shaft nut (2) and washer (3). Remove generator drive gear (4) using Gear Puller, Part No. 95715-19A or All Purpose Claw Puller, Part No. 95635-46, and Wedge Attachment, Part No. 95637-46. Slip drive end oil deflector (5) off armature shaft.

Remove brush cover strap (6). Turn off cummutator end cover nuts (7) and remove washers (8). Pull frame screws and washers (9) out of frame. Tap commutator end cover (10) gently with small mallet and remove. Remove nuts (11) and washers (12) to free positive brush cable and brush leads. Remove brush holder mounting plate (13).

Press armature (14) out of bearing on arbor press or by clamping generator frame between copper jaws in vise and tapping gear drive shaft end with rawhide mallet.

Remove terminal screw nuts (15), lockwashers (16), and insulating washers (17). Remove terminal screws (22 and 24) from inside generator frame and remove from them terminal insulator (18), terminal bolt clip (19), terminal screw bushings (20), bracket insulator (21) and positive brush cable (23).

Tap drive end plate (28) off frame and remove bearing retainer (25) using needle nose pliers. Press armature bearing (26) out of drive end plate using arbor press and appropriate drift pin. Remove bearing retainer (27). Press armature oil seal (29) out of drive end plate from drive gear side.

Remove two pole shoe screws (30). Use large, heavy, screwdriver. Screws are turned extremely tight. Remove pole shoes (31) and field coils (32) from frame (33). Do not remove pole shoe screws, pole shoes and field coils unless necessary to replace faulty parts.

CLEANING, INSPECTING AND REPAIRING (Figure 5-12)

Clean all parts except gasket, armature, field coils and brushes in cleaning solvent and blow dry with compressed air. Wipe rest of parts clean with cloth dampened in Harley-Davidson Safety Solvent, Part No. 99631-77 and blow dry with compressed air.

Examine all parts carefully for wear. Give close attention to condition of insulators, armature windings, field coil wrapping and surfaces of pole shoes nearest armature. If armature had oily appearance before cleaning, replace oil seal. Replace any part of brush holder mounting assembly that is bent.

Disassemble parts as far as necessary in order of numbers shown in Figure 5-12, lowest number first.

Check play in armature ball bearing. If any play can be detected, replace part.

Check fit of armature shaft in roller bearing (44). If fit is obviously too loose, replace as follows:

REMOVING ROLLER BEARING (Figure 5-12)

Press out worn bearing. Support end cover and press on closed end of new bearing until it is flush with surface of end cover.

ASSEMBLING GENERATOR (Figure 5-12)

1. Assemble all parts to the brush holder mounting plate (13).

2. Position pole shoes (31) in field coils (32) and insert in frame. Turn in pole shoe screws until snug. Place frame in vise and use very large screwdriver to securely tighten screws. Use a wrench to turn screwdriver while bearing down with considerable force to keep screwdriver from slipping out of slots. Shoes will align themselves in frame.

3. Place bearing retainer (27) in inner groove in drive end plate (28). Press in bearing (26) to seat against retainer. Compress bearing retainer (25) with needle nose pliers and insert in outer groove.

4. Turn drive end plate back side up and press oil seal (29) in place. Insert armature (14) drive end shaft and press in until shoulder seats.

5. Slip "A" terminal field coil lead on positive terminal screw (24), followed by positive brush cable (23), a terminal screw bushing (20), bolt clip (19) and the terminal insulator (18). Insert the assembly through "A" terminal frame hole from inside. Assemble the insulating washer (17), lockwasher (16) and nut (15) over terminal screw.

6. Slip "F" terminal screw (22) into "F" terminal field coil lead, bracket insulator (21) and screw bushing (20). The assembly is then slipped into "F" terminal frame hole through the bolt clip and terminal insulator. An insulating washer (17), lockwasher (16) and nut (15) are assembled over terminal screw.

7. Slip frame assembly over armature, locating pin (48) in hole in drive end plate. Bend loose end of positive brush cable out commutator end of generator. Push brushes back in brush holders to clear commutator and assemble brush holder mounting plate over commutator so pin (48) registers in small slot and brush cable passes through large slot almost directly opposite.

8. Connect positive brush cable and positive brush lead to insulated brush holder terminal with washer (12) and nut (11). Connect grounded (negative) brush to its terminal in same manner.

9. Install commutator end cover (10) over armature shaft end so notch in edge registers over pin (48) in frame. Slip internal lockwashers over frame screws (9) and feed them through generator from drive end. Assemble lockwashers (8) and nuts (7) to frame screws and tighten securely. Turn armature shaft to see if it is bound or if armature core strikes pole shoes. Shaft should be reasonably difficult to turn but there should be no tight spots. If armature core strikes pole shoes, generator ends are not seated properly or pole shoes are not drawn up tightly.

10. Slip drive end oil deflector (5), drive gear (4) and washer (3) over shaft and turn on nut (2) until gear is seated against oil deflector. Install brush cover strap (6) with connection at bottom as positioned on motorcycle. Coat gasket (1) with gasket sealer and position on generator. Install in reverse order of disassembly as described in "REMOVING GENERATOR."

CIRCUIT BREAKER

DESCRIPTION

The ignition system has two circuits, the primary circuit and the secondary circuit. The primary circuit consists of the battery, switch, primary coil, breaker points, condenser and associated wiring. The secondary circuit consists of the secondary coil, the spark plugs and associated wiring.

The circuit breaker has two functions. First, the breaker cam and contact points open and close the low tension circuit between the battery and ignition coil causing the coil to produce high voltage discharge to the spark plugs. Second, the circuit breaker times discharge for proper engine firing.

The breaker points are operated by a cam with a narrow and wide lobe. The narrow lobe times the front cylinder and the wide lobe times the rear cylinder. A single ignition coil fires both spark plugs at the same time, but one spark occurs in the exhaust stroke of one cylinder and the other spark fires the combustible gases in the other cylinder to produce the power stroke.

The spark timing cam is advanced automatically as engine speed increases through action of the flyweights in the circuit breaker base. This ensures correct spark timing to suit both starting and running requirements.

OPERATION

In tracing the current through the ignition system the initial current comes from the battery. The current flows from the battery through the primary coil to ground and back to the battery while the points are closed. When the cam opens the points, the circuit is broken so that a high voltage surge is produced from ignition coil primary to secondary. This voltage will cause a spark to jump the air gap of the plugs.

The condenser is connected to the circuit breaker points and functions to produce a quick collapse of the magnetic field in the coil so that high voltage will be produced. In doing this, the condenser acts to prevent current from continuing to flow across the contact points after points open.

The engine must be timed to fire at the proper point before top dead center on the compression stroke of each cylinder. This procedure is covered under subsequent headings.

TROUBLESHOOTING

Disengage spark plug cable and insert a metal rod, screw or nail into each spark plug cable. Arrange cable end so tip of inserted metal object is 1/4 in. away from the cylinder head. Turn on the ignition, break the points by hand. See if a "hot" or "blue" spark is obtained between inserted metal object and cylinder head. If not, it is an indication of a weak coil, dead battery, broken or loose wires, etc. Arcing of the points and hard starting indicates a faulty condenser.

Circuit breaker point contacts should be checked for gap and surface condition initially at 500 and 1000 miles, and every 2000 miles thereafter. Point contacts that have undergone considerable use, may not appear bright and smooth. However, this should not be interpreted as meaning points are worn out. Circuit breaker points that are burned or pitted should be replaced.

ADJUSTING POINTS 1970 MODELS

See Figure 5-18 and proceed as follows:

Check the gap between the contact points (5) with a feeler gauge (wire preferred). Point gap should be exactly .020 in. when lever fiber (2) is on the highest point of cam (1). Incorrect point gap spacing affects ignition timing. To adjust the points, loosen lock screw (6) and move the eccentric adjusting screw (7) to provide correct contact point gap. Retighten lock screw (6) and again check the gap to be sure it remains correct.

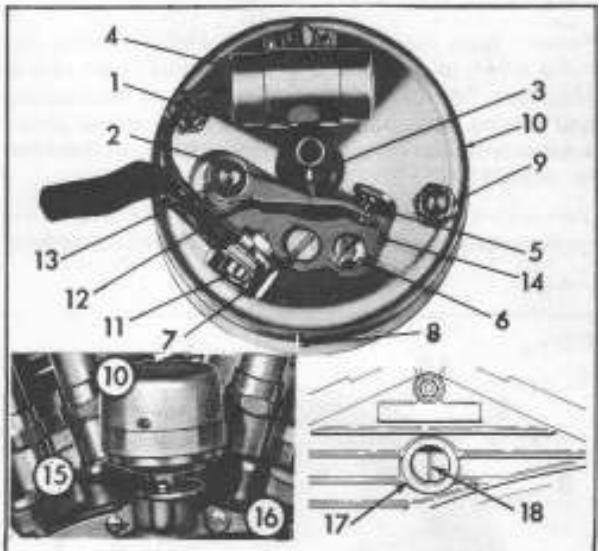

1. Breaker cam
2. Fiber cam follower
3. Cam timing mark
4. Condenser
5. Contact points
6. Adjustable point lock screw
7. Eccentric adjusting screw
8. Timing marks
9. Circuit breaker head nut (2)
10. Circuit breaker head
11. Wire stud screw
12. Circuit breaker lever
13. Pivot stud
14. Contact point and support
15. Stem clamp nut
16. Stem clamp
17. Timing inspection hole
18. Advance (45°) timing mark on flywheel

Figure 5-18. Circuit Breaker (1970)

ADJUSTING POINTS 1971 & LATER MODELS

See Figure 5-19 and proceed as follows:

Remove spark plugs to permit engine to turn easily and rotate flywheels so that cam follower (4) is on highest point of wide cam lobe (5). Check the gap between the contacts (10) with a .018 in. gauge (wire preferred). If it is not exactly .018 in. when the cam follower (4) is on highest point of cam, adjustment is necessary. Incorrect point gap spacing affects ignition timing. To adjust the points, loosen the lock screw (3) and move stationary contact plate, using screwdriver in adjusting notch (1) to provide correct contact point gap. Retighten the lock screw (3) and again check the gap to make sure it remains correct. Points in pitted or worn condition should be replaced.

IMPORTANT

Point gap should be the same for both small and large cam lobes. If variation exceeds .004 in., it is an indication that the cam is running eccentric and the condition should be corrected. See "ASSEMBLING."

CHECKING AND ADJUSTING TIMING 1970 MODELS

Remove spark plugs to permit engine to turn easily. Remove screw plug from timing inspect hole in left side of crankcase. Telescope front push rod cover so that opening and closing of valve can be observed. Remove circuit breaker cover and set circuit breaker point gap as described in "ADJUSTING POINTS."

Turn engine in direction in which it runs until front piston is on compression stroke (just after front intake valve closes), and continue turning engine very slowly (less than 1/2 revolution) until advanced timing mark on flywheel is aligned in inspection hole, as shown in Figure 5-18.

Note that cam must be turned clockwise with flyweights against stops, and held in this position while checking timing.

With cam turned clockwise against stop, timing mark (3) on top edge of circuit braker cam (1) should align perfectly with breaker arm fiber cam follower (2). If it does not, shift circuit breaker head to attain alignment as follows:

Clamp (16) is located on circuit breaker stem to allow 360° adjustment range. Loosen clamp bolts (15) and shift circuit breaker head (10) clockwise (retard) or counterclockwise (advance) to attain alignment.

Circuit breaker cam must be fully advanced clockwise against stop when checking alignment of mark (3) with fiber cam follower (2).

NOTE

Cam (1) engages flyweights on camshaft in either of two positions 180° apart, but only one of these positions will give correct ignition timing. If cam (1) is removed for any reason and engagement with flyweight is lost see subsequent paragraph, "INSTALLING CIRCUIT BREAKER."

CHECKING TIMING WITH CIRCUIT TESTER

Timing mark (3, Figure 5-18) on cam is the approximate point at which contacts (5) open and front cylinder ignition spark occurs. When the wide cam lobe opens the points, rear cylinder ignition spark occurs. Connect a circuit tester such as a light bulb across the contact points to determine the exact point of contact opening. Loosen circuit breaker clamp nuts just enough to shift circuit breaker head (10) so

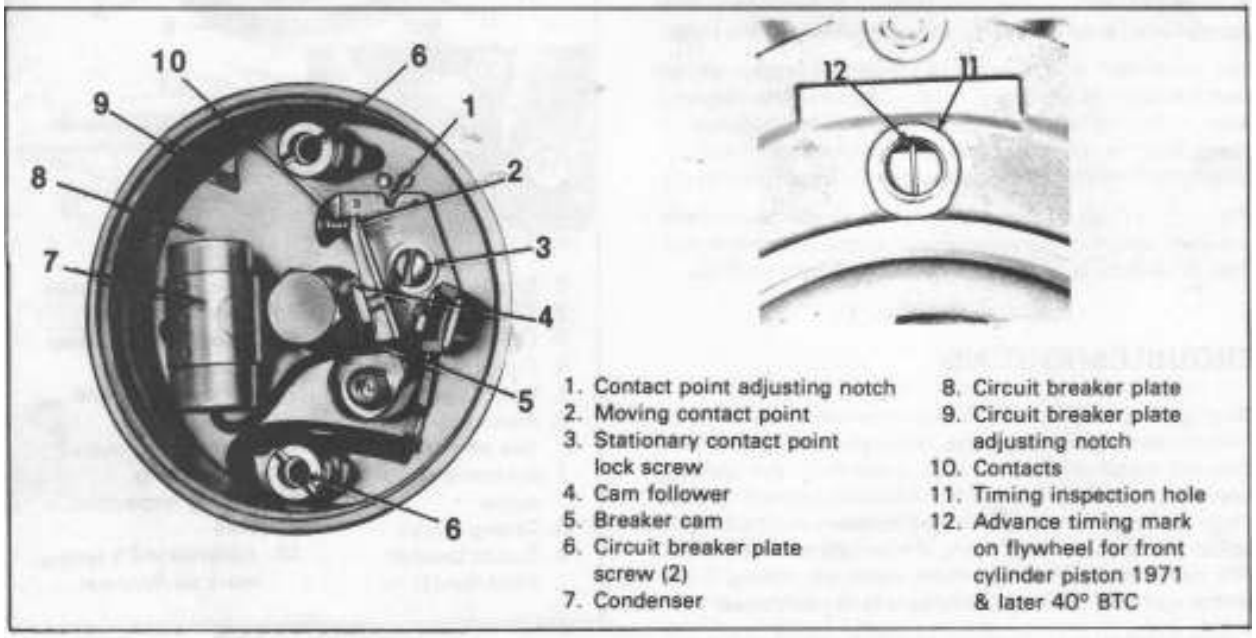

1. Contact point adjusting notch
2. Moving contact point
3. Stationary contact point lock screw
4. Cam follower
5. Breaker cam
6. Circuit breaker plate screw (2)
7. Condenser
8. Circuit breaker plate
9. Circuit breaker plate adjusting notch
10. Contacts
11. Timing inspection hole
12. Advance timing mark on flywheel for front cylinder piston 1971 & later 40° BTC

Figure 5-19. Circuit Breaker (1971 & Later)

contacts will open exactly when flywheel advanced timing mark (18) is aligned in center of inspection hole (17). Be sure to rotate cam clockwise as far as it will go and hold in this position when checking timing. (This procedure will result in approximate timing and engine can be operated in an emergency for a short period until the following accurate timing procedure can be followed.)

NOTE

The above timing will be approximate (slightly retarded) because of circuit breaker drive gear lash and end play which exist when engine is not operating. To set ignition timing accurately, it must be checked with a strobe light timing gun with the engine running according to the procedure in the following paragraph.

CHECKING TIMING WITH STROBE LIGHT

With engine running cam will automatically advance above idle speed. To check advanced spark timing, operate engine at 2000 rpm using Strobe light timing light to view advanced timing mark (see Figure 5-20). Timing light leads should be connected to front spark plug, ground, and positive red wire to battery terminal. A clear plastic Timing Hole Plug, Part No. 96295-65 is available for screwing into the crankcase hole for viewing the flywheel timing mark to prevent oil spray while the engine is running. Adjustment in timing is made with the engine running by loosening circuit breaker stem clamp slightly and rotate head into correct position as described previously.

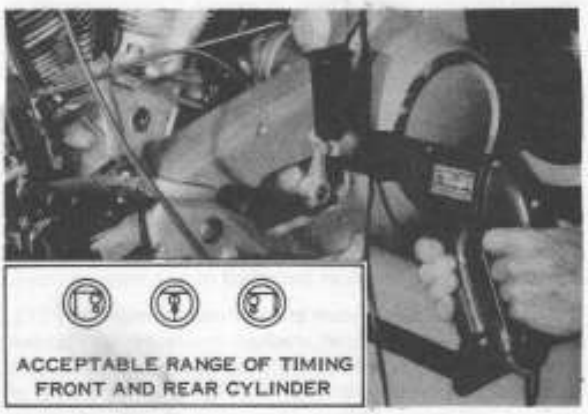

Figure 5-20. Checking Timing with Strobe Light

CHECKING AND ADJUSTING TIMING 1971 & LATER MODELS

CHECKING TIMING WITH STROBE TIMING LIGHT (Figure 5-20)

Use a strobe flash timing light (timing gun) to view front cylinder advance timing mark (12) on flywheel through accessory plastic view plug screwed into timing inspection hole (11) while engine is running at 2000 rpm. Timing light leads should be connected to front spark plug, ground and positive red wire to battery terminal. Light will flash each time front cylinder spark occurs. Loosen circuit breaker plate screws (6) just enough so circuit breaker plate (8) can be shifted using a screwdriver in notch (9) as light aimed into inspection hole (11) stops timing mark (12) in center of hole.

NOTE

Rear cylinder advance timing mark is a double dot which should appear on or near the front cylinder advance timing mark while viewing with timing light. See Figure 5-20.

Timing will retard 30° automatically when engine is stopped.

Accurate advanced ignition timing cannot be obtained except with use of a strobe timing light. However, in an emergency, when one is not available, circuit breaker plate can be adjusted so screws (6) are in center of slots where engine will operate satisfactorily at low speed until more accurate timing can be obtained with a strobe timing light.

DISASSEMBLING AND ASSEMBLING 1970 MODELS

REMOVING CIRCUIT BREAKER FROM ENGINE (Figure 5-18)

Thoroughly clean area around circuit breaker and blow all loose dirt from crankcase with compressed air, and remove stem clamp bolts (15) and clamp (16) to free entire circuit breaker from crankcase.

INSPECTING AND REPLACING PARTS (Figure 5-21)

Remove cover screws and lockwashers (2) and cover (1). Using cloth dampened with Harley-Davidson Safety Solvent, Part No. 99631-77, wipe circuit breaker clean and inspect parts.

Inspect circuit breaker contact points (5, Figure 5-18). If lever fiber (2) is badly worn, replace points. Points that are burned or pitted should be replaced or dressed with a clean, fine cut contact point file. Do not attempt to remove all roughness nor dress point surfaces down smooth; merely remove scale or dirt. Contact point file should not be used on other metal and should not be allowed to become greasy or dirty.

Never use emery cloth or sandpaper to clean points, since particles will embed themselves and cause arcing and rapid burning of points.

Circuit breaker points should be replaced, if contact point pressure is not within prescribed limits of 14 to 18 oz. Check pressure with a spring gauge. The scale should be hooked to the breaker lever at an angle of 90 degrees with the point surface and reading taken just as points break. Excessive pressure causes rapid wear of fiber block, cam, and contact point. Insufficient pressure will permit high speed point bounce which will, in turn, cause arcing and burning of the points and missing of the engine.

Point faces must seat squarely against each other. If bent, square up by bending contact plate.

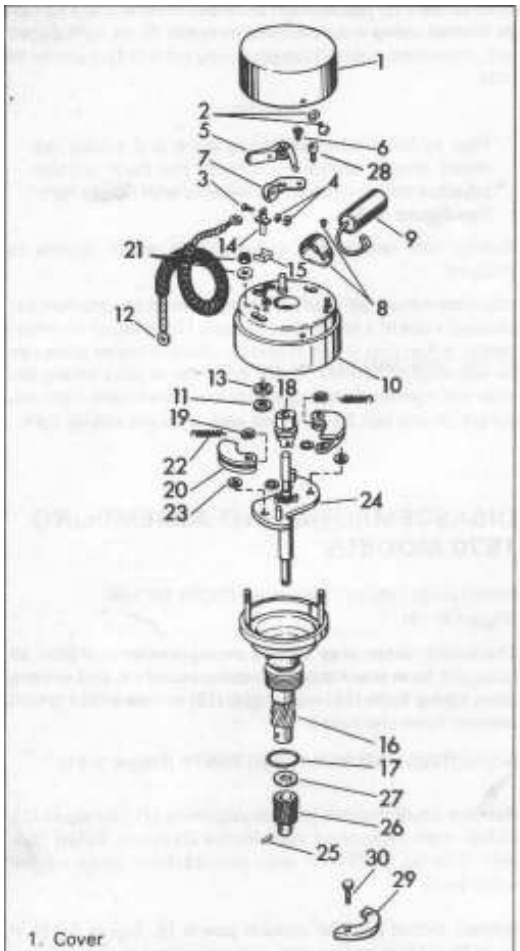

1. Cover
2. Cover screw and lockwasher
3. Wire stud screw
4. Wire stud nut and lockwasher
5. Lever, contact point
6. Adjustable point lock screw
7. Contact point and support
8. Condenser bracket and screw
9. Condenser
10. Base
11. Wire stud washer
12. Cable
13. Wire stud fiber washer
14. Wire stud
15. Wire stud insulator
16. Stem
17. O-ring
18. Cam
19. Clip (2)
20. Flyweight (2)
21. Base nut washer (2)
22. Flyweight spring (2)
23. Washer (4)
24. Camshaft
25. Gear pin
26. Gear
27. Shaft washer
28. Eccentric screw
29. Stem clamp
30. Clamp bolts (2)

Figure 5-21. 1970 Circuit Breaker - Exploded View

To replace a set of circuit breaker points, loosen screw (11, Figure 5-18) and slip condenser wire and connection from screw. Lift circuit breaker lever (12) from screw (11) and pivot stud (13). Remove screw (6) and circuit breaker contact point and support (14). Install new points in reverse order of disassembly. Position circuit breaker lever (12), lever notch registered with screw (11), between brass washer and condenser wire end. Be sure point faces seat squarely against each other. Adjust point gap as previously described in "ADJUSTING POINTS."

Lubricate breaker cam with a trace of Harley-Davidson Hi-Temp Grease, Part No. 99862-72 when points are replaced or every 5000 miles. Also remove cam and lubricate shaft. Replace cam in correct position.

Check circuit breaker advance flyweight action by moving cam in direction required to advance weights to their fully extended position. Then release the cam and see if springs return to the fully retarded position. Correct causes for faulty action by cleaning and lubricating shaft, cam and flyweights and replacing weak springs.

Be extremely careful to avoid excessive lubrication. If too much grease is used, the excess is apt to get on the contact points and cause them to burn.

For maximum operating efficiency it is recommended practice to replace circuit breaker points when pitted, burned or worn excessively.

The condenser (4) is a relatively long life part and will not require frequent replacement. However, if the condenser is suspected of being defective simply replace with a proven new condenser and note whether engine performance is improved. A condenser that is defective will have either an open or short circuit. An open circuit will be evident by excessive arcing at breaker contact points and a shorted circuit will have no noticeable spark at the contact points.

Examine the circuit breaker base pivot stud (13) for wear or damaged condition. Try circuit breaker base (10), Figure 5-21 in stem (16) for free turning, but not loose fit. If base is found excessively worn or damaged in any way, renew it.

Examine the coil to circuit breaker low tension wire (12, Figure 5-21) for brittle or cracked insulation and broken strands and replace if defective. Inspect circuit breaker wire stud insulator (15) and fiber washer (13) for brittle or cracked condition. Unless inspection shows insulation defective, it is not necessary to remove stud, insulator and washers.

Examine cam advance mechanism on automatic advance circuit breakers to see that flyweights (20) move outward freely and springs (22) return them inward against stops. Check for looseness of cam (18) on spindle (24) and wear on sides of flyweight (20) ears which engage slots in cam. Check springs (22) and replace if stretched or distorted.

To disassemble mechanism pry clips (19) from grooves in pivot pins on stem plate (24). Inspect teeth on worm gear (26) for excessive wear and damage. Check the amount of end play and side play of shaft (24) in stem. End play in excess of .008 in. or excessive side play of shaft in stem bushings will affect ignition timing and also allow oil from cam gear base to enter breaker assembly base to contaminate ignition points.

If renewal of shaft or stem parts is necessary remove pin (25) from gear and lift or press circuit breaker camshaft from gear. Withdraw camshaft from base. If bushings have excessive wear, timer stem assembly can be replaced or stem assembly can be rebushed by drifting out old bushings and installing new bushings. New bushings should require no reaming. When reassembling gear and breaker camshaft use spacer washer (27, Figure 5-21) (.062 thick), (.066 thick), (.072 thick) or (.076 thick) to obtain a .001 to .007 in. shaft end play.

When assembling circuit breaker shaft in breaker stem, always secure gear and spacer washer to shaft with new steel pin riveted in place. Rotate shaft to be sure it is free in stem.

INSTALLING CIRCUIT BREAKER (Figure 5-21)

Remove spark plugs to permit engine to turn easily; remove screw plug from timing inspection hole in left side of crankcase. Telescope front push rod cover so that opening and closing of valve can be observed. Turn engine in direction in which it runs until front piston is on compression stroke (just after front intake valve closes) and continue turning engine very slowly (less than 1/2 revolution) until advance timing mark (Figure 5-18) on flywheel is aligned in the inspection hole.

Assemble circuit breaker as follows: Lubricate camshaft end of shaft and stem assembly (24) and install breaker cam (18) on camshaft so that notches in cam engage with flyweights (20). Place breaker base (10) on stem and shaft assembly. Install nuts and washers (21). Do not overtighten. Install new seal (17). Before installing circuit breaker, turn shaft gear to approximately align cam mark (3) with cam follower (2) as shown in Figure 5-18. Insert circuit breaker into gearcase with wire toward rear of engine. This will position circuit breaker points to outside of engine permitting access to adjusting screws when cover is removed.

With flywheel ignition timing mark in center of timing hole in crankcase, observe how close timing marks on cam lobe lines up with breaker lever fiber. If fiber is not close to cam lobe timing mark, lift circuit breaker assembly and turn shaft gear in correct direction so engagement with driving gear is changed one tooth and reinstall circuit breaker in gearcase to get approximately close alignment of fiber and cam mark. Reinstall stem clamp (29, Figure 5-20) and tighten clamp bolts (30) being sure cam mark and fiber are still in alignment.

Adjust ignition timing. See previous paragraph "CHECKING AND ADJUSTING IGNITION TIMING."

DISASSEMBLING AND ASSEMBLING 1971 & LATER MODELS

REMOVING CIRCUIT BREAKER PARTS
(Figure 5-22)

Remove circuit breaker cover screws (1), cover (2) and gasket (3). Pull wire terminal (4) from breaker contact assembly (12) terminal post. Remove circuit breaker cam bolt (5). Remove breaker plate screws (6, 6A or 6B) and lockwashers and washers (7) or retainer (7A), free breaker plate assembly (8).

Remove cam (9) from advance assembly (10) and remove advance assembly from gearcase cover.

To remove circuit breaker contact assembly (12) from circuit breaker plate (13), pull condenser (15), terminal from breaker contact terminal post. Also unhook flat spring from terminal post. Remove screw (11) to free point set from breaker plate (13). To remove condenser (15), remove screw and lockwasher (14) from breaker plate (13).

To disassemble advance mechanism, unhook spring (16) loops from grooves in pivot pins and slip flyweights (17) with spring from pivot pins on advance base (18). Do not remove springs from flyweights unless they are to be replaced. Roll pins (18, 19 and 20) are pressed in and can be replaced if necessary.

INSPECTING AND REPLACING PARTS
(Figure 5-22)

Using cloth dampened with Harley-Davidson Safety Solvent, Part No. 99631-77, wipe circuit breaker clean and inspect parts.

Inspect circuit breaker contacts (12). If lever rubbing block is badly worn, replace. Contacts that are burned or pitted should be replaced or dressed with a clean, fine cut contact point file. Do not attempt to remove all roughness nor dress contacts surfaces down smooth; merely remove scale or dirt. Contact point file should not be used on other metal and should not be allowed to become greasy or dirty. Never use emery cloth or sandpaper to clean contacts since particles will embed themselves and cause arcing and rapid burning.

Circuit breaker contact assembly (12) should be replaced, if contact point pressure is not within prescribed limits of 14 to 18 oz. Check pressure with a spring gauge. The scale should be hooked to the breaker lever at an angle of 90 degrees with the point surface and reading taken just as contacts break. Excessive pressure causes rapid wear of rubbing block, cam, and contacts. Insufficient pressure will permit high speed bounce which will, in turn, cause arcing and burning of the contacts and missing of the engine.

Contact faces must seat squarely against each other. If bent, square up by bending plate on levers.

Inspect lip of cam seal (21) and replace it if worn or rough. Also replace seal if there is evidence of oil leakage into circuit breaker arm.

When installing contacts, be sure contact faces seat squarely against each other. Adjust gap as previously described in "ADJUSTING POINTS."

Check flyweight springs, and if bent or stretched, replace them. When installing, be sure that bent end of each spring is hooked through bottom of hole, and that upper looped end grips groove in pin tightly. (See Figure 5-23.)

Lubricate breaker cam with a trace of Harley-Davidson Hi-Temp Grease, Part No. 99862-72, when contact set is replaced or every 5000 miles. Also remove cam and lubricate shaft and flyweight bearing surfaces with Harley-Davidson "Anti-Seize," Part No. 99632-77, spray type lubricant. Replace cam in correct position so that it engages both flyweights and flat side is next to roll pin (19).

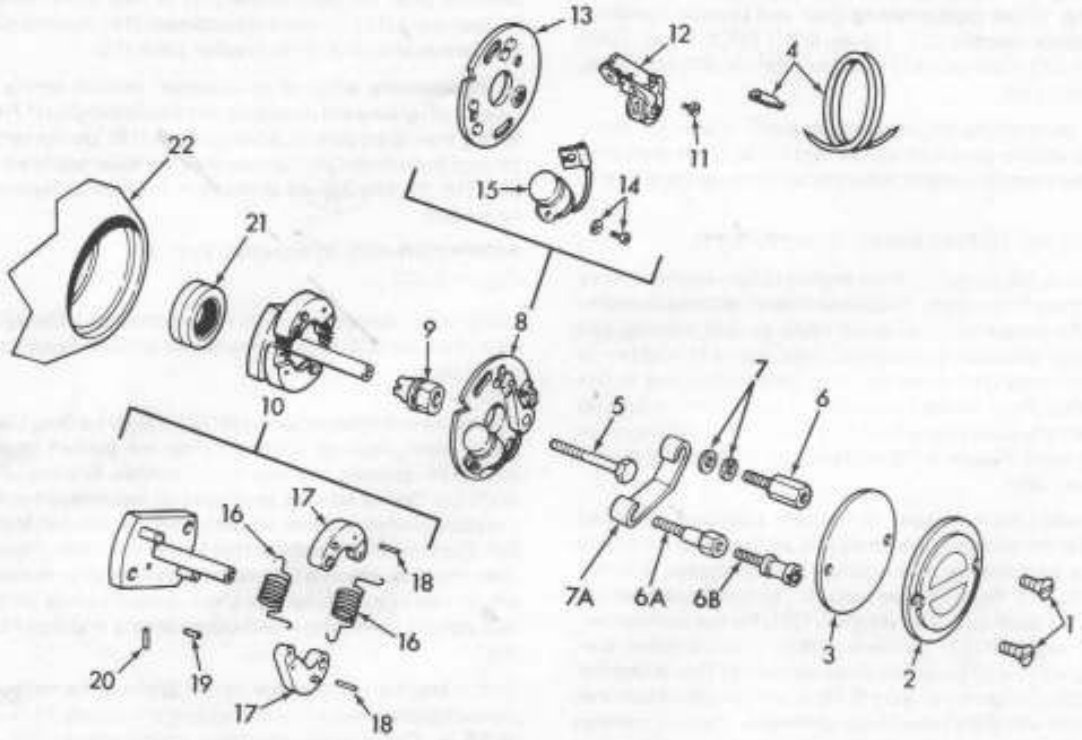

1. Circuit breaker cover screws (2)
2. Circuit breaker cover
3. Circuit breaker cover gasket
4. Wire terminal and wire
5. Circuit breaker cam bolt
6. Breaker plate screw (2) (early 1971)

6A. Breaker plate screw (2) (late 1971 to 1972)

6B. Breaker plate screw (2) (1973 & later)

7. Breaker plate screw lockwasher and washer (2) (early 1971)

7A. Retainer (late 1971 to 1972)

8. Breaker plate assembly
9. Breaker cam
10. Advance assembly
11. Breaker contact screw (early 1972 & earlier)
12. Breaker contact assembly
13. Breaker plate
14. Condenser screw and lockwasher (2, late 1972 & later)
15. Condenser
16. Flyweight spring (2)
17. Flyweight (2)
18. Flyweight roll pin (2)
19. Cam stop roll pin
20. Register roll pin
21. Camshaft seal
22. Gearcase cover

Figure 5-22. 1971 & Later Circuit Breaker - Exploded View

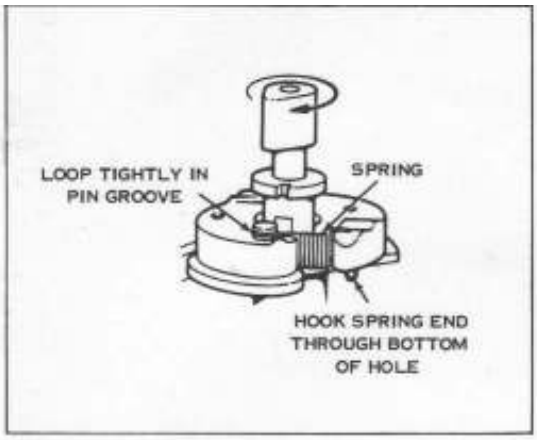

Figure 5-23. Advance Unit Flyweight Spring Assembly

Check circuit breaker advance flyweight action by moving cam in direction required to advance weights to their fully extended position. Then release the cam and see if springs return to the fully retarded position. Correct causes for faulty action by cleaning and lubricating shaft, cam and flyweights and replacing weak springs.

Be extremely careful to avoid excessive lubrication. If too much grease is used, the excess is apt to get on the circuit breaker contacts and cause them to burn.

For maximum operating efficiency it is recommended practice to replace circuit breaker contacts when pitted, burned or worn excessively.

The condenser (15) is a relatively long life part and will not require frequent replacement. However, if the condenser is suspected of being defective simply replace with a proven new condenser and note whether engine performance is improved. A condenser that is defective will have either an open or short circuit. An open circuit will be evident by excessive arcing at breaker contacts and a shorted circuit will have no noticeable spark at the contacts.

Examine the coil to circuit breaker low tension wire (4, Figure 5-22) for brittle or cracked insulation and broken strands and replace if defective.

Examine cam advance mechanism on automatic advance circuit breakers to see that flyweights (17) move outward freely and springs (16) return them inward against stops. Check for looseness of cam (9) on spindle (10) and wear on sides of flyweight (17) ears which engage slots in cam. Check springs (16) and replace if stretched or distorted.

ASSEMBLING

Assemble circuit breaker parts in reverse order of disassembly. Refer to "REMOVING CIRCUIT BREAKER PARTS" in this section.

Advance assembly (10, Figure 5-22) must seat squarely and firmly on end of camshaft.

Assemble circuit breaker plate (8, Figure 5-22) so that screws are centered in slots (for approximate timing).

Adjust circuit breaker point gap to .018 in. and set ignition timing as described under "CHECKING AND ADJUSTING IGNITION TIMING."

IMPORTANT

Circuit breaker point gap should be within .016 to .020 in. limits on both cam lobes. If not within this range, the cam (9, Figure 5-22) or advanced assembly (10, Figure 5-22) may be assembled incorrectly on camshaft, or parts may be damaged, causing eccentric operation. Generally, loosening bolt (5) and repositioning advance assembly (10) toward widest point gap will equalize gap satisfactorily.

IGNITION COIL

DESCRIPTION

The ignition coil is a pulse transformer that transforms or steps up low battery or generator voltage to high voltage necessary to jump the electrode at the spark plug in the engine cylinder head. Internally, coil consists of primary and secondary windings with laminated iron core and sealed in waterproof insulating compound. Case cannot be taken apart or coil repaired.

TROUBLESHOOTING

When hard starting or missing indicates a faulty ignition system, first, check condition of battery. If lamps light with full brilliancy and horn blows, indicating current source is in at least fair condition check, clean or replace spark plug. If this does not correct performance, inspect circuit breaker points and install new condenser. If condition persists, check primary and secondary resistance of ignition coil with an ohmmeter. Resistances should be within the following limits: Primary resistance 4.7 to 5.7 ohms, secondary resistance 16,000 to 20,000 ohms (16k to 20k).

If an ohmmeter is not available, temporarily substitute a new ignition coil by attaching it at any convenient point near old coil (coil will function without being securely grounded). Transfer terminal wires to new coil. Attach new coil cables to spark plugs. If ignition trouble is eliminated by the temporary installation of new coil, carefully inspect old coil for damaged cables and insulation. The insulation on cables or coils may be cracked or otherwise damaged allowing high tension current to short circuit. This is most noticeable in wet weather or when motorcycle has been washed.

Replacing plug cable is the only repair that can be made to an ignition coil. If this does not correct faulty coil performance, coil is defective and must be replaced.

REPLACING SPARK PLUG CABLE (Figure 5-24)

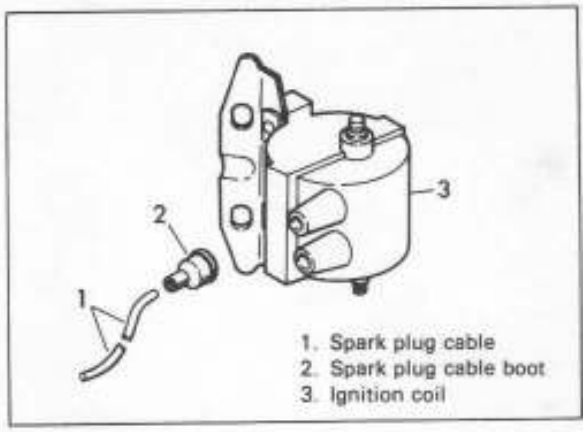

Figure 5-24. Ignition Coil

Remove old cable (1) from coil terminal and install new cable. Always be certain that cable boot or cap (2) is securely tightened to the coil tower to prevent moisture and dirt from contacting the high tension lead. Replace boot or cap if damaged or loose fitting.

Resistor type high tension cables are used. This type cable has a carbon impregnated fabric core instead of solid wire for radio noise suppression and improved reliability of electronic components. For this reason it is recommended that the exact replacement cable is used.

CAUTION — When disconnecting cable connector from spark plug terminal, do not pull on cable itself because carbon core will become damaged. Always pull on rubber boot as close as possible to the spark plug terminal.

SPARK PLUGS

GENERAL

arley-Davidson spark plugs (Figure 5-25) have been designed to give maximum life and efficient combustion of fuel. They are available in various "heat ranges," each for a particular service application. Plugs are labeled with numbers 2, 3, 4, 4A or 5 the lowest number indicating the "hottest" plug. Designations 3-4 and 5-6 are special purpose plugs.

For normal service after break-in, the No. 5 spark plug is recommended. However, for special service conditions, a "colder" or "hotter" plug may be desired. The number 4 plug is used on original equipment for break-in service, but the number 3 plug could be used for slow speed service. The number 5 plug is recommended for normal highway travel and maximum throttle operation. The 4R plug has a resistor element to reduce radio interference originating in the motorcycle ignition system. The resistor element will not affect engine performance or fuel economy. It is not uncommon for best results to be obtained with plugs of different heat ranges in front and rear cylinders, with the front usually the colder.

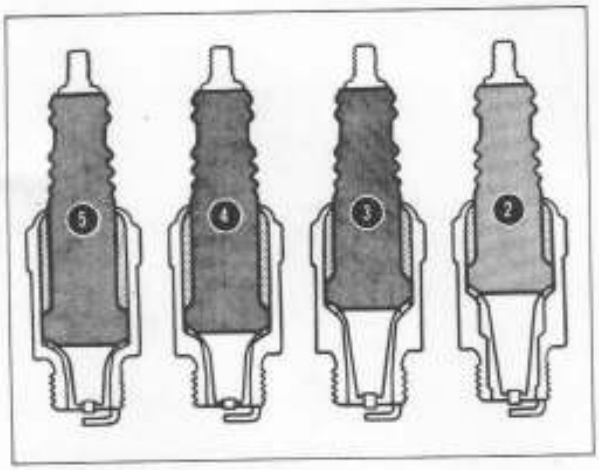

Figure 5-25. Spark Plug Heat Range

REMOVING SPARK PLUGS

Disconnect wires from plugs, as described earlier. Use a deep socket wrench or special spark plug wrench to loosen plugs. Blow away all dirt from plug base with compressed air before removing plug.

CLEANING, INSPECTING AND REPAIRING (Figure 5-26)

Examine plugs as soon as they have been removed. The deposits on the plug base are an indication of the correctness of the plug heat range and efficiency, as well as a guide to the general condition of rings, valves, carburetor and ignition system.

A wet, black and shiny deposit on plug base, electrodes and ceramic insulator tip (A) indicates an oil fouled plug. The condition is caused by worn rings and pistons, loose valves, weak battery, faulty ignition wires, circuit breaker trouble, weak coil or a cold plug.

A dry, fluffy or sooty black deposit (B) indicates plug is gas fouling, a result of a too rich carburetor air-fuel mixture, long periods of engine idling or a cold plug.

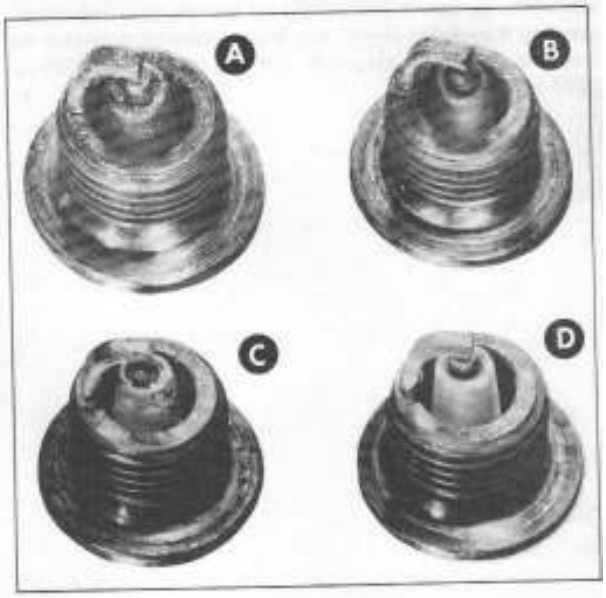

Figure 5-26. Type of Plug Base Deposits

An overheated plug (C) can be identified by a light brown, dry, glassy looking deposit. This condition may be accompanied by cracks in the insulator tip and is caused by too lean an air-fuel mixture, a hot running engine, valves not seating, improper ignition timing or too hot a plug for the service. The oxide deposit on the spark plug is a conductor when hot. It will cause plug to misfire, especially at high speed.

A plug with a rusty brown to tan powdery deposit (D) indicates a balanced ignition and combustion condition. With leaded gasolines the deposits may be white or yellow. In either case, ignition functions through the deposits if only light and the deposits should be cleaned off at regular intervals to keep them from building up.

When spark plug electrodes have become eroded away (C) to the point where gap setting is difficult or impossible, the plug should be replaced. Plugs with cracked insulator should also be discarded.

Clean plugs with an abrasive blast spark plug cleaner. Rotate plug top while applying sand blast to clean insulator and electrodes. Cleaning time should be carefully limited to just what is necessary to clean deposits from insulator nose. Prolonged use of abrasive blast will wear away insulator. Normally three to five seconds of sand blasting is sufficient. Never use metal instruments to remove deposits from plugs.

SETTING SPARK GAP

Before setting spark gap on used plugs, pass a thin point file between electrodes to produce flat, parallel surfaces to facilitate accurate gauging.

Use only a wire type gauge. Bend the outside or grounded electrode so only a slight drag on the gauge is felt when passing it between electrodes. Never make adjustments by bending the center electrode. Set gap on plugs at .025 to .030 in.

TESTING SPARK PLUGS

Check the sparking ability of a cleaned and regapped plug on a sparking comparator if possible. An inability to withstand rapid firing under cylinder compression conditions can be discovered.

INSTALLING SPARK PLUGS

Before turning spark plugs into cylinder heads, check condition of threads in head and on plug. Soften deposits in cylinder head with penetrating oil and clean out with tap or old plug.

Install spark plug finger tight and then torque to 26 to 30 ft-lbs. If a torque wrench is not available, tighten finger tight and then using a spark plug wrench, tighten an additional 1/4 to 3/8 turn.

Check and adjust engine idle speed and mixture setting after installing plugs if necessary.

REGULATOR - 1977 & EARLIER

GENERAL

Two unit voltage regulators and three unit current and voltage regulators are used to control generator output to the electrical system.

Normally the regulator does not require attention at regular service intervals; however, point cleaning, point setting and air gap adjustments may be necessary if regulator is not functioning correctly.

Four basic tests are required:

1. Test the generating system to determine whether the generator or regulator is at fault.
2. Test the cutout unit closing voltage.
3. Test the voltage control unit setting.
4. Test the current control unit setting.

Voltage and current settings for regulators are listed in following table of specifications.

Before making any checks or adjustments, the charging circuit must be operated approximately 15 minutes to bring regulator to normal operating temperature. Regulator cover and gasket must be in place.

Two methods are used for making regulator tests, the method used depending upon the type of equipment available.

METHOD I employs separate voltmeter, ammeter, fixed resistances of 1/4 ohm and 1-1/2 ohm, and 25 watt variable field resistor. This is the method outlined in detail in the Delco-Remy Service Bulletins.

METHOD II employs single test instrument incorporating the same components as Method I, and in addition has a variable load resistance. The equipment used is a VAT 26 voltage-ampere tester manufactured by the Sun Equipment Corporation.

REGULATOR TEST SPECIFICATIONS - 1977 & EARLIER

Model	Regulator Part Number		For Testing Procedure See Delco-Remy Service Bulletin Number	Regulator Type	Adjustment and Range Amps	Adjustment and Range (Volts)		Remarks
	Harley-Davidson	Manufacturer's Number			Current Regulator Setting	Cutout Relay Closing Voltage	Voltage Regulator Setting	
XLH	74510-64	1119 614 Delco-Remy	1R 119A	3 Unit Current Voltage	10 (9.0-11.0)	12.4 (11.8-13.0)	14.3* (13.9-14.5)*	(*Upper contact operation. Operation on lower contacts must be .1 to .3 volt lower.)
Current Regulator Air Gap .075 in. Voltage Regulator Air Gap Varies with Setting						Cutout Relay Air Gap and Point Opening .020 in. Voltage Regulator Point Opening .016 in.		

Model	Regulator Part Number		Relay Cut-In Voltage	Regulator Voltage	
	Harley-Davidson	Bosch		No Load	Load
XLCH	74511-65	TBA 130-150/12/2	12.4-13.1	13.8-15.4	12.7-14.5 @ 10 amp.

METHOD I — TESTING DELCO-REMY REGULATOR FOR XLH MODEL (1977 & EARLIER)

A. TESTING THE GENERATING SYSTEM (See Figure 5-27)

1. Disconnect wires from regulator "BAT" terminal and connect these wires to the negative lead of an ammeter (0-30 amperes). Connect positive ammeter lead to regulator "BAT" terminal.

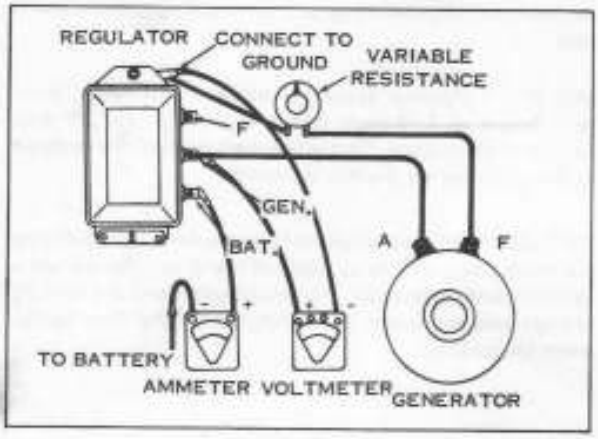

Figure 5-27.

2. Connect the positive lead of a voltmeter (0-20 volts) to the regulator "GEN" terminal. Connect voltmeter negative lead to ground on motorcycle.

3. Disconnect the wire from the regulator "F" terminal and connect this wire to a lead of a field control variable resistor. Connect other lead of field control variable resistor to ground on motorcycle. Set field control knob to open position.

4. Operate engine at 2000 rpm (approximately 40 mph).

5. Slowly turn field control knob toward direct position until the ammeter reads 10 amperes.

If ammeter reading is as specified, generator is not faulty and difficulty is in regulator. Make regulator tests B, C and D.

6. If there is no ammeter reading or reading is low, observe voltmeter reading. If voltmeter reading is below 12 volts, generator requires service.

7. If voltmeter reading is high, over 15 volts, the cutout relay is not closing. Make tests B, C and D.

NOTE

Before making adjustments or servicing regulator, identify by number stamped on regulator base, or mounting bracket, then refer to "REGULATOR TEST SPECIFICATIONS" Pg. 5-41 which contains service information for desired regulator. Delco-Remy Bulletins listed in table may be obtained from a Delco-Remy service station or the Harley-Davidson Motor Co. Inc.

B. TESTING CUTOUT RELAY UNIT CLOSING VOLTAGE (THE SAME CONNECTIONS ARE USED AS IN TEST A (Figure 5-27)

1. Turn field control variable resistor to open position.

2. Operate engine at 1500 rpm (approximately 30 mph).

3. Slowly turn field control knob toward direct position to decrease resistance in field circuit. Voltmeter reading will increase slowly until cutout points close. Closing voltage will be highest voltmeter reading before meter pointer "kicks" to read battery voltage. After cutout points close, ammeter will indicate a current flow.

If closing voltage is not within specifications, adjust setting according to manufacturer's service bulletin. (See table Pg. 5- .)

C. TESTING VOLTAGE CONTROL UNIT SETTING (Figure 5-28)

1. Remove battery wire from regulator battery "BAT" terminal. Connect a 1/4 ohm resistor (not less than 25 watts) in series with the removed battery wire and the regulator battery "BAT" terminal.

2. Connect the positive lead of a voltmeter (0-15 volts) to the regulator "BAT" terminal, connect the negative lead to ground.

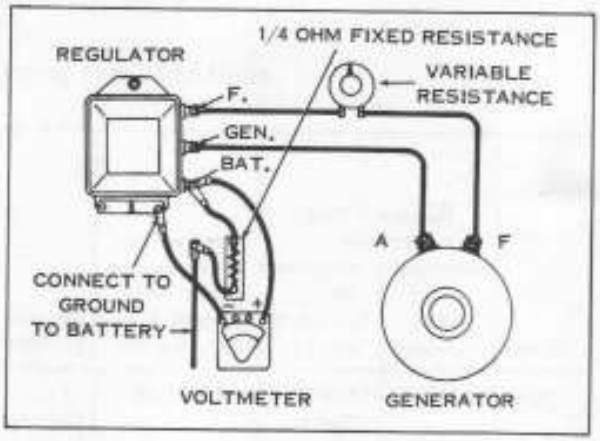

Figure 5-28.

3. Remove wire from regulator field "F" terminal and connect a 25 watt variable resistance field control in series with the removed wire and the regulator field "F" terminal, turn control knob to direct position (no resistance). Operate engine at 2000 rpm (approximately 40 mph). Turn field control resistor knob to "Open" position then to "Direct" position to cycle regulator. Check voltmeter reading. Reading indicated on voltmeter is the voltage regulator setting of the upper contacts (shorting contacts). Voltmeter reading should be within manufacturer's specifications as shown in the table on Pg. 5-41. Maintain engine speed, slowly rotate field control resistor toward "Open" position to increase resistance until voltmeter reading drops slightly and then remains steady. This indicates the voltage setting of the lower contacts (series contacts). The voltage difference between the settings of the two sets of contacts should be within specifications listed in table.

All final readings should be taken with cover in place.

If voltage readings are not within specifications, replace regulator or service and adjust settings (see "SERVICING REGULATOR").

CAUTION — Never ground the generator or regulator field terminal while these two units are connected and operating. This will burn up the upper set (shorting set) of contacts of the voltage control unit.

D. TESTING CURRENT CONTROL UNIT SETTING (Figure 5-29)

1. Remove battery wire from regulator "BAT" terminal and connect to negative lead of ammeter (0-30 amps). Connect positive lead of ammeter to regulator "BAT" terminal.

2. Connect positive lead of voltmeter to regulator battery "BAT" terminal and negative voltmeter lead to ground.

3. Turn on light and connect additional load to the battery to drop the voltmeter reading to one volt below voltage regulator setting.

4. Operate engine at 2000 rpm (approximately 40 mph) and note reading on ammeter. If reading is not within regulator specifications shown in Table replace regulator or adjust according to manufacturer's Service Bulletin.

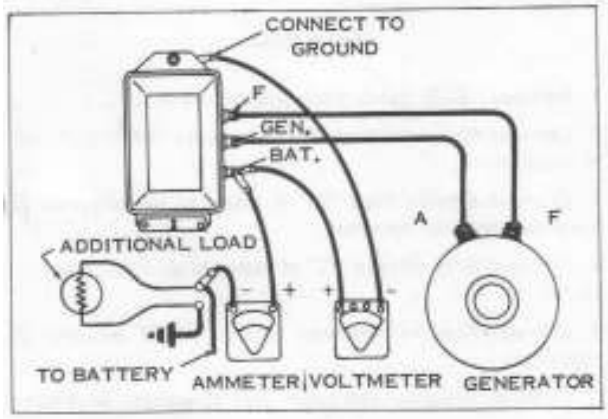

Figure 5-29.

METHOD I — TESTING BOSCH REGULATOR FOR XLCH MODEL (1977 & EARLIER)

NOTE

This regulator is a sealed unit and no servicing or adjusting is necessary or recommended. When some difficulty arises, checks can be made to determine if the regulator is controlling generator output within specifications. If voltage readings are not within specifications, regulator should be replaced.

A. TESTING GENERATING SYSTEM (Figure 5-30)

1. Disconnect wire from regulator battery terminal "B+."

2. Connect one lead from 1-1/2 ohm resistor (not less than 100 watt rating) to the regulator "B+" terminal. Connect the other lead from the resistor to the positive terminal of an ammeter (0-15 amp). Connect the negative ammeter lead to ground on motorcycle.

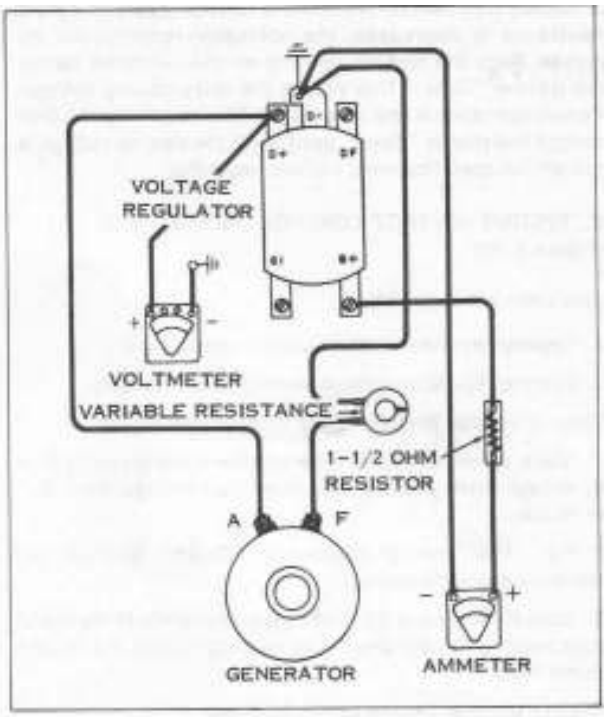

Figure 5-30.

3. Connect the positive lead of a voltmeter (0-15 volts) to regulator "D+" terminal, connect the negative lead to ground on chassis.

4. Disconnect wire from regulator field "DF" terminal and connect this wire to one lead of a field control variable resistor, connect other lead of the field control to ground on motorcycle chassis. Turn field control to "Open" position.

5. Operate engine at 2700 rpm (approximately 45 mph).

6. Slowly rotate field control resistor knob toward the "Direct" position until ammeter reads 10 amperes, then immediately turn the control knob to "Open" position. If a reading of 10 amperes is obtained, generator is O.K. and any difficulty in the charging circuit is caused by a faulty regulator or defective wiring. Inspect wiring and make regulator tests B and C. If a reading of 10 amperes cannot be obtained and voltmeter reading is below 12 volts, generator is in need of service.

If no reading is obtained on ammeter but voltmeter reading is 15 volts or higher, cutout relay is defective and regulator should be replaced.

B. TESTING CUTOUT RELAY UNIT CLOSING VOLTAGE - SAME CONNECTIONS ARE USED AS IN TEST A (Figure 5-30)

1. Turn field control resistor knob to "Open" position.

2. Operate engine at 2000 rpm (approximately 35 mph).

3. Slowly turn field control toward "Direct" position. As the resistance is decreased, the voltmeter reading will increase. Note the highest reading on the voltmeter before the pointer "kicks." This will be the relay closing voltage. Repeat operation a few times, each time returning the field control resistor to "Open" position. If the closing voltage is not within specifications, replace regulator.

C. TESTING VOLTAGE CONTROL UNIT SETTING (Figure 5-31)

Two tests are required:

1. Testing regulator voltage setting under load.

2. Testing regulator voltage setting under no load.

Testing Voltage Setting Under Load (Figure 5-31)

1. Make same connections as used to make previous Test B, except move positive voltmeter lead to regulator "B+" terminal.

2. Turn field control resistor to "Direct" position (no resistance in field circuit).

3. Operate engine at 2700 rpm (approximately 45 mph) and note reading on voltmeter. This reading will be the voltage under load.

Testing Voltage Setting Under No Load

1. Remove 1-1/2 ohm resistor used in previous load test from circuit by disconnecting grounded ammeter lead. Place field control resistor in Direct position (no resistance).

2. With engine running at 2700 rpm, note voltmeter reading. This reading will be the voltage at no load.

Readings taken in Load and No Load tests must be within specifications or regulator should be replaced. See Table (Pg. 5-41) for specifications.

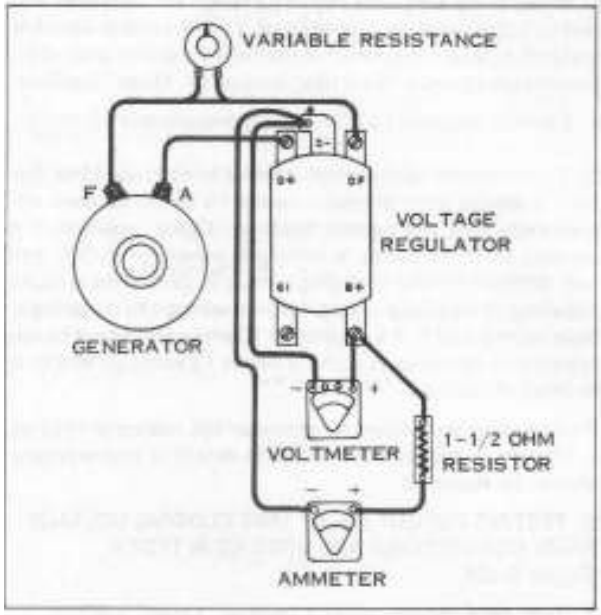

Figure 5-31.

METHOD II — TESTING DELCO-REMY REGULATOR FOR XLH MODEL (1977 & EARLIER) (VAT 26) TESTER)

A. TESTER CONTROLS

Turn ground polarity selector to *negative;* load control knob to *direct;* ammeter selector to *100A* position; and voltage selector to 16V position.

B. TESTER CONNECTIONS (See Figure 5-32)

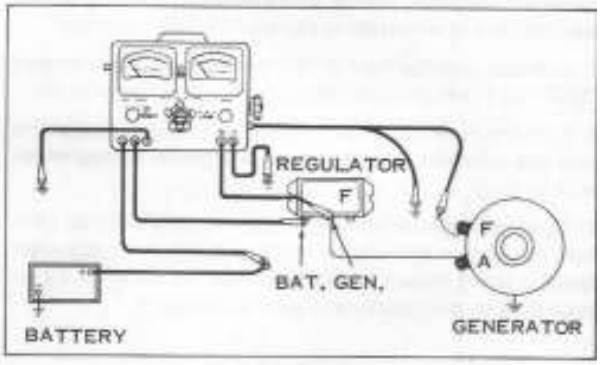

Figure 5-32.

1. Remove "BAT" leads from voltage regulator.

2. Connect *Regulator* lead "R" of tester to "BAT" terminal of regulator.

3. Connect *Battery* lead "B" of tester to wires removed from regulator B+ terminal.

4. Connect *Ground* lead "G" of tester to ground of motorcycle.

5. Connect *Positive* voltmeter lead to "GEN" terminal of regulator.

6. Connect *Negative* voltmeter lead to ground of motorcycle.

7. Remove wire connected to regulator field "F" terminal and connect this wire to a lead of the field control variable resistor, the other lead of the field control resistor is connected to ground on motorcycle. Turn field control to "Open" position.

C. TESTING GENERATING SYSTEM

1. Operate enging at 2000 rpm (approximately 35 mph).

2. Slowly turn field control resistor knob to "Direct" position until ammeter reads 10 amperes.

If ammeter reading is as specified, generator is not at fault and difficulty is in voltage regulator or wiring. Make regulator Tests D, E and F.

3. If there is no ammeter reading or reading is low, observe voltmeter reading. If voltmeter reading is below 12 volts, generator requires service.

4. If voltmeter reading is over 15 volts, the cutout relay is not closing. Make following Test D.

NOTE

Before making adjustment or servicing regulator, identify regulator by Delco-Remy number stamped on regulator base or mounting bracket. Then, see table (Pg. 5-41), which contains service information for the desired regulator. Delco-Remy Bulletins listed in table may be obtained from Delco-Remy service station or the Harley-Davidson Motor Co.

D. TESTING CUTOUT RELAY UNIT CLOSING VOLTAGE (Figure 5-32)

Use same tester connections as previous Test C. (Figure 5-32)

1. Turn field control variable resistor to "Open" position.

2. Turn load control knob to "Direct" position.

3. Operate engine at 1500 rpm (approximately 30 mph).

4. Slowly turn field control resistor knob toward "Direct" position observing voltmeter.

As resistance is decreased in field circuit, voltage will rise. Note highest reading before meter pointer "kicks" to read battery voltage. Repeat operation several times, each time turning field control to "Open" position. Highest reading observed is the cutout relay closing voltage.

If closing voltage is not within specifications listed in table, replace regulator or adjust according to manufacturer's service bulletin.

E. TESTING VOLTAGE CONTROL UNIT SETTING (Figure 5-33)

Same connections are used as in previous Test D except move Positive voltmeter lead to regulator battery "BAT" terminal and remove grounded lead of the field control variable resistor and connect to regulator field "F" terminal.

1. Turn field control knob to "Direct" position.

2. Turn load control to the 1/4 ohm position.

Operate engine at 2000 rpm (approximately 40 mph). Turn field control resistor knob to "Open" position then to "Direct" position to cycle regulator. Check voltmeter reading. Reading indicated on voltmeter is the voltage regulator setting of the upper contacts (shorting contacts). Voltmeter reading should be within manufacturer's specifications.

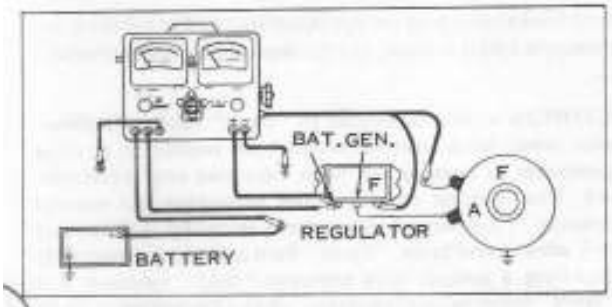

Figure 5-33.

Maintain engine speed, slowly rotate load control knob clockwise to increase load until voltmeter reading drops slightly and then remains steady. This indicates the voltage setting of the lower contacts (series contacts). The voltage difference between the settings of the two sets of contacts should be within specifications.

All final readings should be taken with regulator cover in place.

If voltage readings are not within specifications, replace regulator or service and adjust settings (see "SERVICING REGULATOR").

CAUTION — Never ground the generator or regulator field terminal while these two units are connected and operating. This will burn up the upper set (shorting set) of contacts of the voltage control unit.

F. TESTING CURRENT CONTROL UNIT SETTING (Figure 5-33)

Use same connections as previous Test E. Voltage Control Test.

1. Turn field control to "Direct" position.

2. Operate engine at 2000 rpm.

3. Turn load control clockwise until maximum reading is obtained on ammeter.

This reading will be equal to the current limiter setting. If not within specifications listed in table (Pg. 5-41), replace or adjust according to manufacturer's service bulletin and retest. Take final reading with regulator cover in place.

METHOD II — TESTING BOSCH REGULATORS FOR XLCH MODEL (1977 & EARLIER) (VAT 26 TESTER)

A. TESTER CONTROLS

Turn ground polarity selector to *Negative;* load control knob to *Direct;* ammeter selector to *100A* position; and voltage selector to 16 volt position.

B. TESTER CONNECTIONS (See Figure 5-34)

1. Remove wire from regulator "B+" terminal.

2. Connect *Regulator* lead "R" of tester to regulator terminal "B+".

3. Connect *Ground* lead "G" of tester to ground on motorcycle.

4. Connect *Positive* voltmeter lead to regulator terminal "D+" and connect *Negative* lead to ground on motorcycle.

5. Remove wire from regulator terminal "DF" and connect wire to a lead of the field control variable resistor. Connect the other lead of the field control to ground on motorcycle. Turn field control to "Direct" position. Turn load control to "Direct" position.

Battery lead "B" of tester is not connected for this test.

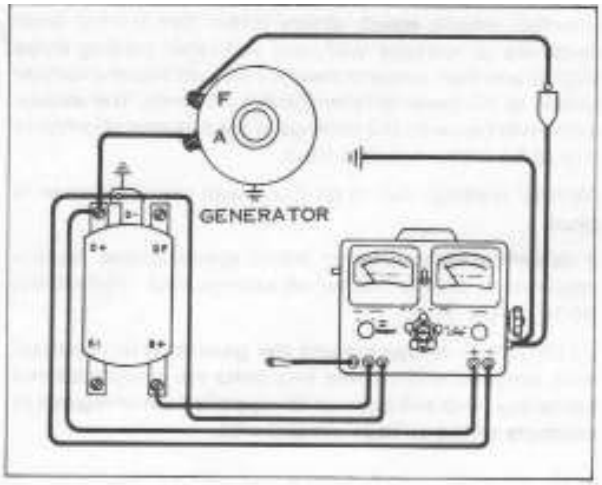

Figure 5-34.

C. TESTING GENERATING SYSTEM

1. Operate engine at 2700 rpm (approximately 45 mph).

2. Slowly rotate load control clockwise until a reading of 10 amperes is observed.

3. If a reading of 10 amperes is obtained, generator is not at fault and difficulty is due to a faulty regulator or defective wiring. Inspect wiring and make Tests D and E.

4. If a reading of 10 amperes cannot be obtained and voltmeter reading is below 12 volts, generator is defective.

5. If no reading is obtained on ammeter but voltmeter reading is 15 volts or higher, cutout relay is defective. Regulator should be replaced and circuit retested.

D. TESTING CUTOUT RELAY UNIT CLOSING VOLTAGE

Make same connections as in previous Test C, except connect battery lead "B" of tester to 1-1/2 ohm connection on side of tester.

1. Turn load control to "Direct" position.

2. Turn field control variable resistor to "Open" position.

3. Operate engine at 2000 rpm (approximately 35 mph).

4. Slowly turn field control variable resistor toward "Direct" position while observing the voltmeter. As resistance is decreased in field circuit, voltage will rise.

Observe highest voltmeter reading before voltmeter pointer kicks back. Repeat operation several times, each time returning field control to "Open" position. Highest reading observed is the cutout relay closing voltage.

If closing voltage is not within specifications listed in table, replace regulator.

E. TESTING VOLTAGE CONTROL UNIT SETTING (Figure 5-35)

Two tests are required:

1. Testing regulator voltage setting under load.

2. Testing regulator voltage setting under no load.

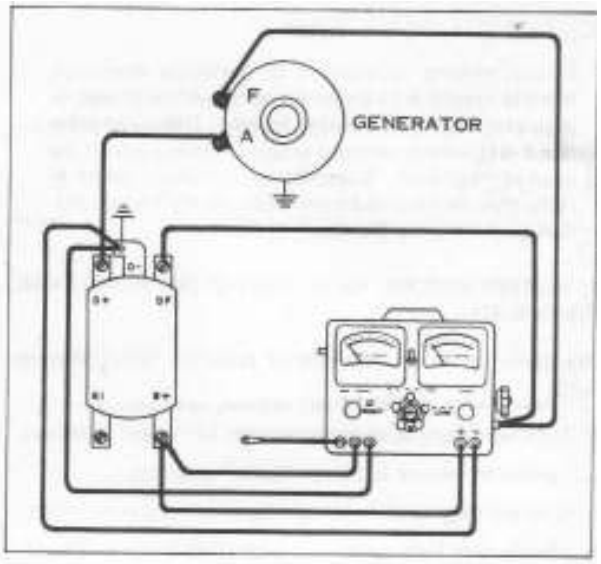

Figure 5-35.

Testing Voltage Setting Under Load

1. Make connections as in previous Test D, except switch positive voltmeter lead to regulator "B+" terminal, disconnect tester battery lead "B" from 1-1/2 ohm connector on tester, disconnect field control lead from ground connection on motorcycle and connect this lead to regulator "DF" terminal.

2. Turn field control resistor to "Direct" position (no resistance in field circuit).

3. Operate engine at 2700 rpm (approximately 45 mph).

4. Turn load control knob clockwise to load circuit until ammeter reads 10 amperes.

5. Voltmeter reading will be voltage setting under load.

Testing Voltage Setting Under No Load

1. Return load control knob to "Direct" position.

2. Turn field control resistor to "Direct" position.

3. Operate engine at 2700 rpm.

4. Voltmeter reading will be voltage setting at no load.

Both load and no load voltage readings must be within specifications listed in table or regulator should be replaced.

CAUTION — It is advisable to "flash" field coils whenever wires have been removed from regulator; or after generator or battery has been removed and is reinstalled. This is done to make sure generator has correct polarity. If polarity of generator is reversed, relay points will vibrate and burn. "Flash" field coils by momentarily touching a jumper wire between "BAT" terminal and "GEN" terminal on regulator, after all wires have been properly connected and before starting engine.

SERVICING REGULATORS (1977 & EARLIER)

DELCO-REMY REGULATOR

Faulty operation of Delco-Remy regulators may be due to one or more of the following conditions:

1. Contact points dirty, oxidized or pitted – To clean contacts, refer to manufacturer's service bulletin, listed in table (Pg. 5-41).

After cleaning contacts, the air gaps and contact spacing must be adjusted. See table for information on the voltage regulator and cutout relay air gap and contact opening setting.

2. Ground wire broken (short braided wire between regulator base and mounting bracket).

3. Defective resistor (underneath regulator).

4. Corrosion contamination on regulator internal parts.

After any faults have been corrected, regulating units must be adjusted according to manufacturer's service bulletin, see table.

BOSCH REGULATOR

Service or adjustment to internal parts of Bosch regulators is not recommended since contact spacing and air gaps are factory set. If tests indicate that the regulator is defective, it should be replaced.

NOTE

If a new regulator is installed, it should be checked out in operation on the vehicle.

REGULATOR - 1978

GENERAL

The solid state voltage regulator manufactured by Tympanium (patents pending) controls the output of the DC generator. It incorporates the electronic equivalents of the cut-out relay, the voltage relay and the current relay of its electromechanical predecessor. It is, however, insensitive to dust, dirt or vibration but has a more sensitive electronic circuit which holds the output to closer tolerances than before possible.

Figure 5-36 shows a simplified schematic diagram.

Diode D_1 prevents current flow from the battery into the regulator and generator, but permits charging current to pass from the generator to battery and load.

Transistor Q_1, through the voltage divider consisting of R_1, Z_1, and R_2, senses the generator output voltage. When the output voltage rises; Q_1 draws more current through R_5 causing the voltage at the base of Q_3 to drop. The generator field current I_F which flows into the collector of Q_3 is thus reduced. This in turn causes the generator output voltage to drop. An equilibrium condition is reached whereby the generator supplies just enough current to the electrical load to maintain a constant preset output voltage.

When the output voltage drops through increased load or reduced rpm the reverse happens. Q_1 draws less current which causes Q_3 to draw more, which increases the output voltage.

Transistor Q_2 senses the voltage across R_3 which is a measure of the generator current. When the current exceeds a predetermined value Q_2 turns on. This turns on Q_1 which turns off Q_3. The field current is reduced and so is the output current.

CHECKING CHARGING SYSTEM - 1978

GENERAL

When the charging system fails or is not charging at a satisfactory rate, as is visually evidenced by a weak battery, dim lights, or excessive battery water usage. It is recommended that the following checks be made.

PRELIMINARY CHECKS

Battery: Check for weak or bad battery. See Battery Section. Battery must be fully charged for following electrical tests.

Wiring: Check for corroded or loose connections in charging circuit. Particularly check for worn or pinched wires in the generator-to-regulator harness. Also check for corroded or loose terminals at generator. Remove rubber regulator connector plug and check for burned or corroded terminals. Regulator base must have a good, clean, tight connection for proper grounding.

ELECTRICAL CHECKS

If the preliminary inspection shows components to be in good condition, make the following electrical checks:

Regulating Voltage Check: (See Figures 5-37 and 5-38.) Connect an ammeter in series with the regulator output. Connect load rheostat (carbon pile) and voltmeter across battery. Check regulating voltage while running engine at 2000 rpm.

Adjust load rheostat (or carbon pile) to 2-7 amperes output. The voltage readings then should conform to the values given by the curves shown in Figure 5-39 at the temperature measured at the time of testing. For example, if the

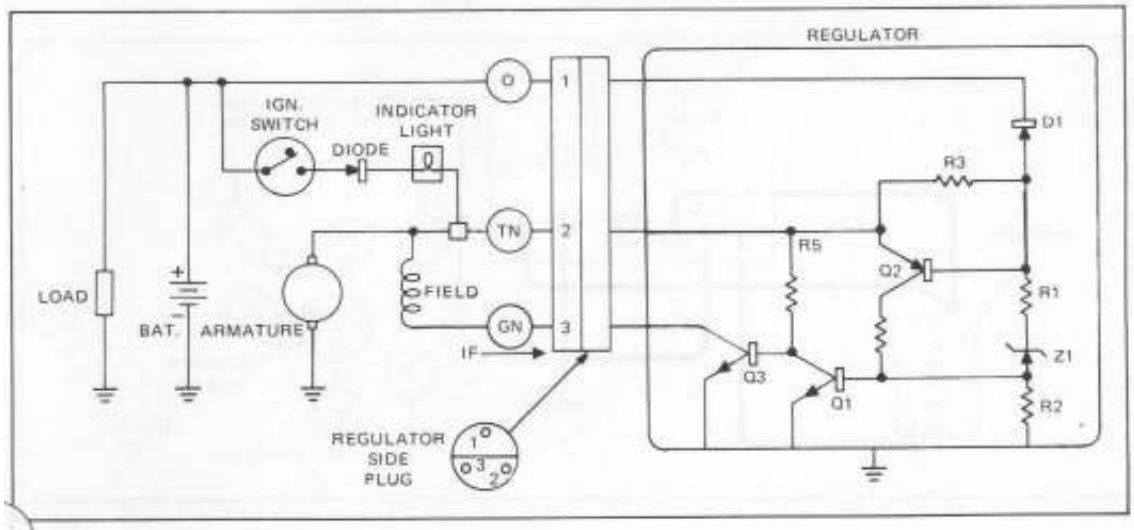

Figure 5-36. Schematic Diagram - 1978

regulator temperature was +75°F, the upper voltage (from upper curve) would be 15.0 volts and the lower voltage (from lower curve) would be 13.8 volts.

If voltage exceeds upper limit of curve, check for ground in field circuit of generator (see "GENERATOR") or in regulator to generator field wire (green). If no ground is found, defect is probably in regulator – replace with known good unit.

If voltage is below lower limit on curve, proceed with output check. If system passes output check, regulator is out-of-specification – replace with know good unit.

Output Check:

Run engine at 2000 rpm and adjust load rheostat (carbon pile) to obtain a constant 12.5 volts. The output current should be 10 amperes minimum, 11 amperes maximum.

If no generator output current is obtained in the output check, polarize generator (see "POLARIZING GENERATOR").

Again check output at 2000 rpm per "Output Check." If still no generator output current is obtained, momentarily ground generator "F" terminal with engine running at 2000 rpm. **(CAUTION — Do not ground "F" terminal for longer than 10 seconds – damage to generator or regulator can occur).** With "F" terminal grounded, generator output should be 18 amps minimum. If output is O.K. with "F" terminal grounded, problem is most likely in regulator – replace with known good unit and retest. If output is low, check generator (see "GENERATOR"). If no output current is obtainable, problem could be in regulator or generator. Check regulator as follows: Disconnect rubber regulator connector and connect ohmmeter between battery and generator wires (orange and tan wires on regulator). Re-

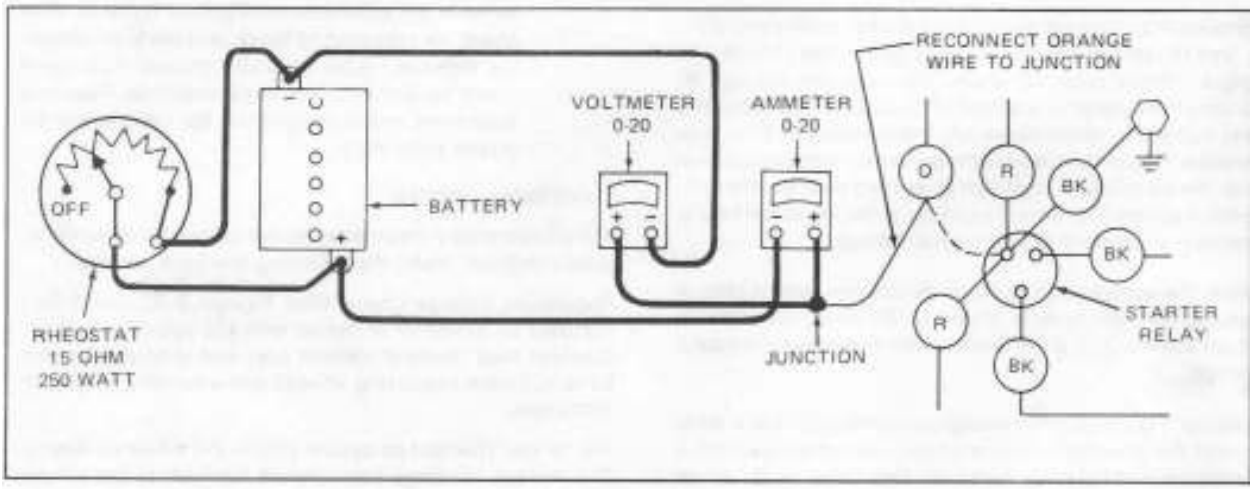

Figure 5-37. Test Arrangement with Individual Components

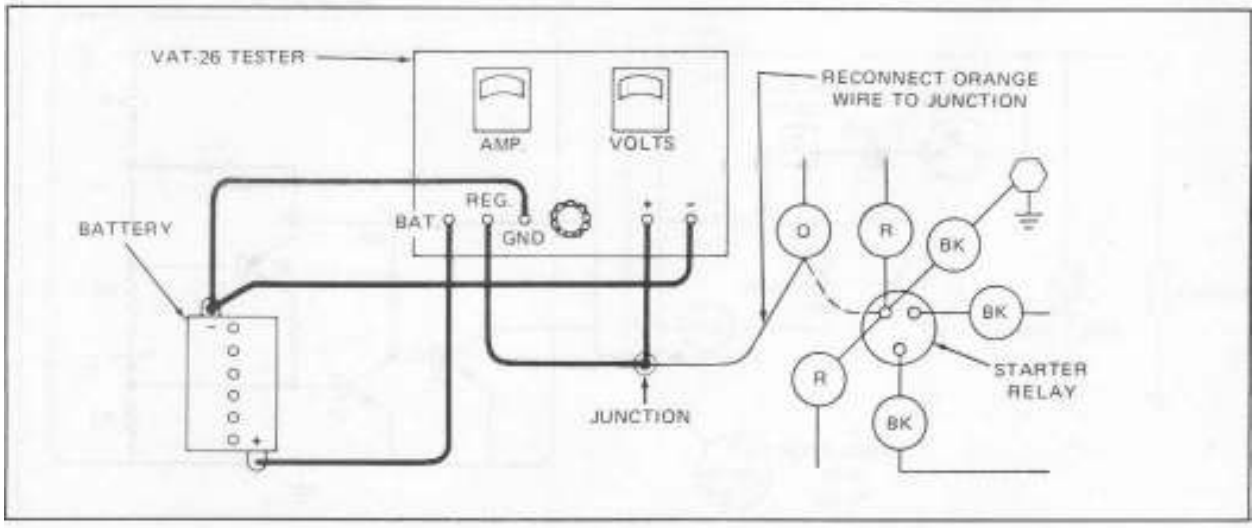

Figure 5-38. Test Arrangement with Sun Vat-26 Tester

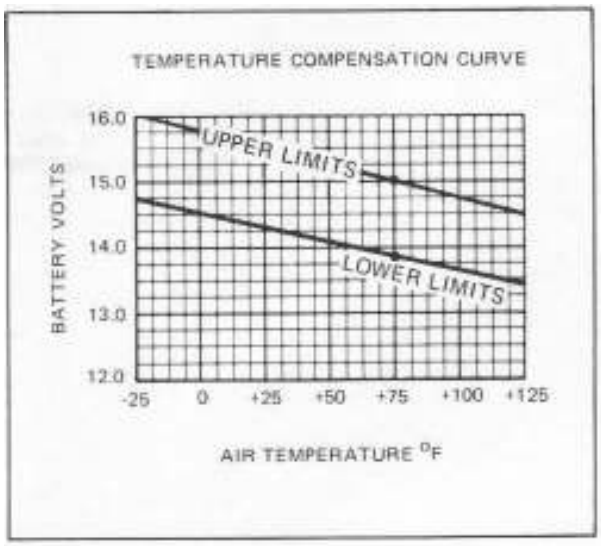

Figure 5-39. Regulating Voltage

verse ohmmeter connections. Ohmmeter should show continuity (low resistance) with one set of ohmmeter connections, and open circuit (high resistance) with the other connection. If regulator checks O.K., check generator (see "GENERATOR"). If regulator does not pass ohmmeter test, replace with a known good regulator and retest.

If charging system operates properly, and generator warning light still glows, check diode in wiring harness. Also check for missing or bad regulator ground.

Check the Regulator:

If the regulator appears to be the defective component, check it by replacing it with a unit that is known to be good and check again. Electrically disconnect the unit to be checked, then temporarily connect in the new unit. If the output is now okay, the original rectifier-regulator was defective and should be replaced. If the output is still unsatisfactory, the original unit was probably okay and the problem lies elsewhere.

BATTERY

GENERAL

The battery serves as a storage place for current used in starting the motorcycle; to operate accessories when the engine is not running and to provide additional current, when necessary, over the amount being generated. For a battery to remain in good condition, the current draw must be balanced by a current input. All Harley-Davidson batteries have lead plates and sulphuric acid electrolyte units of capacities suitable for load requirements under intended use.

BATTERY CARE

Prompt and correct battery care determines the life span of the unit. Therefore, for a longer useful life, the battery solution level must be checked at weekly intervals. Add only pure distilled or approved water.

With a hydrometer or syringe, add water to each cell to raise level of solution up to level for type of battery as follows:

XL – Fill to triangle or circle at base of hole.

XLCH – Maintain level between upper and lower limits shown on battery.

Be careful not to overfill. Overfilling will result in some of the electrolyte being forced out through cap vent holes, diluting or weakening the solution strength. An overflow of battery solution will cause cables to corrode and motorcycle parts near the battery to be damaged.

WARNING — Batteries contain sulphuric acid. Avoid contact with skin, eyes or clothing.

ANTIDOTE - External - Flush with water.
Internal - Drink large quantities of milk or water followed by milk of magnesia, vegetable oil, or beaten eggs. Call doctor immediately.
Eyes - Flush with water and get immediate medical attention.

Clean battery and terminals when necessary with a baking soda-water solution. Be careful to avoid getting any of the solution into the cap vent holes. When solution stops bubbling, flush off battery with clean water.

Coat terminals with grease or oil felt terminal post washers after wires have been attached to retard corroding.

TESTING BATTERY

Use the following instructions for testing battery condition. As a guide for determining when to start or stop charging, check charge state in all cells (Tests A and B). As a guide for determining battery condition, use load test C.

HOW TO TEST

Discharged, or less than 1/2 charged batteries (1.210 gravity) must be recharged in order to have charge sufficient for testing. Use hydrometer (A) or load tester (B) as follows:

A. Use of Hydrometer: (Refer to chart below)

1. Be sure to correct reading for temperature extremes. For each 10° above 80°F add 4 points, or deduct 4 points for each 10° below 80°F.

NOTE

Harley-Davidson Hydrometer, Part No. 96802-63, has built-in thermometer and correction chart and is recommended for testing all batteries.

2. Read gravity of each cell and record.

3. If any 2 cells very more than 50 points, replace battery

4. If cells are even or vary only slightly; battery is generally not "suspect."

BATTERY CHARGE CONDITION

State of Charge	Specific Gravity (A)
100%	1.250-1.270
75%	1.220-1.240
50%	1.190-1.210
25%	1.160-1.180

B. Use of Load Tester (Figure 5-40)

1. Never use on discharged batteries or batteries under 3/4 charged (1.240 sp. gr.).

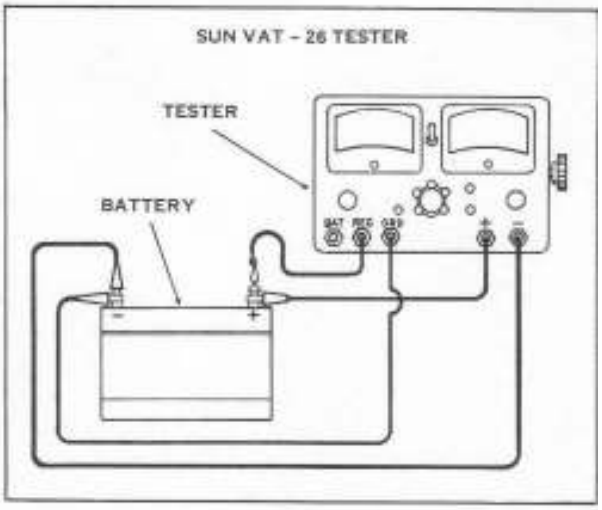

Figure 5-40. Testing Battery Capacity

NOTE

The Sun VAT-26 Tester (or equivalent) is recommended for load testing the battery.

2. Fully charge the battery before testing. Load battery to 3 x amp hr rating using the Sun VAT-26 Tester. (The Harley-Davidson 32 amp hr battery should be loaded to 96 amperes, the 19 amp hr battery to 57 amperes and the 7 amp hr battery to 21 amperes.) Voltage reading after 15 seconds should be 9.6 or more. Note: Voltmeter leads must be connected directly to battery posts.

CHARGING BATTERY

Never allow a battery to stand in a discharged condition. Start charging it at once at the recommended continuous charge rate.

To determine the amount or condition of a battery charge, check solution in each cell with a battery hydrometer as outlined in paragraph titled "TESTING BATTERY." When hydrometer reading is 1,200 or less, battery is considered discharged and should be removed from motorcycle and charged at 2.0 amperes maximum continuous charge rate, using appropriate 12 volt charger.

A higher battery charge rate will heat and damage the battery. For this reason, do not allow the small motorcycle battery to be charged in the same line with large batteries. Hydrometer reading of a fully charged battery in good condition, with full strength electrolyte will be 1.270 or higher.

WARNING — Hydrogen gas, formed when charging, is explosive. Avoid open flame or electrical spark near battery.

Allowing a battery to remain in a discharged condition will shorten its life. It is important that a battery be kept well charged during below freezing weather.

RECLAIMING SULPHATED BATTERY

If a battery has been allowed to stand in a discharged condition for a period of time, the lead sulphate in the plates will crystallize and not take a charge at normal rates. Such batteries should be charged at half the specified continuous rate for twice the computed time. A longer charging time at a slower rate will many times break down the crystalline structure into active materials and restore the battery.

CHANGING ELECTROLYTE

In normal service with average care, it is never necessary to change electrolyte for the lifetime of the battery. However, if the battery solution is spilled, diluted as a result of careless water addition, or neutralized by the addition of an alkaline substance, the battery solution may be changed and in some cases near full capacity restored.

A weak acid solution may be detected by charging the battery until all cells gas freely and the gravity has not shown a rise for three successive readings taken at hourly intervals. "Gassing" is evidenced by a bubbling action in the electrolyte that may be detected by sight or sound. Do not change electrolyte in a battery with one or more cells that fail to gas. Such a condition indicates a structural failure.

Pour solution out of charged battery and fill with water. Charge battery again until maximum specific gravity is reached. Pour out this solution and add prepared battery electrolyte to specified level and charge again for a short length of time for full capacity.

Check specific gravity and add a little water if necessary to bring solution down to desired maximum limits.

The value of changing electrolyte in a fairly old battery is questionable. By tipping over such a battery to drain the solution, the sloghed-off waste materials accumulated by repeated charging and discharging actions might be dislodged from the sediment chambers in the bottom of the battery and deposited in the separators. This material is an electrical conductor and thus may "tree" or catch in the separators and cause a short circuit.

HORN

Horn is shown in Figure 5-41. If the horn fails to blow or does not blow satisfactorily, check for loose, frayed or damaged wiring leading to horn terminals, discharged battery, etc. If these steps do not correct the trouble, turn in contact point adjusting screw, located back of horn, until horn just gives a single click – then retard screw until best tone is obtained. If horn fails to operate after moving adjusting screw, entire horn must be replaced because it is permanently riveted together. Mounting parts are replaceable.

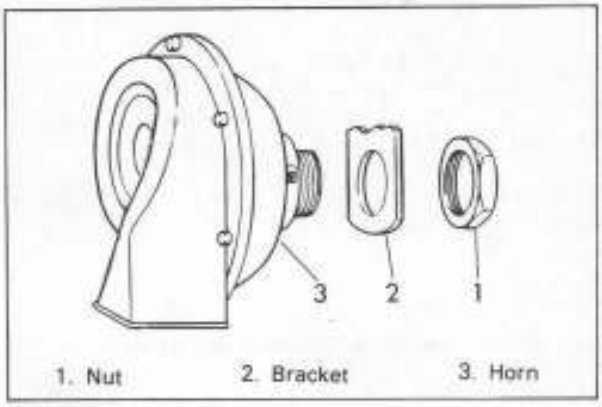

Figure 5-41. Horn

STARTER MOTOR

DESCRIPTION

The starter motor is a 12 volt, series field 4-pole drive motor which engages the clutch ring gear through a Bendix type drive and a reduction gear unit. A solenoid relay provides battery current directly to the motor. The solenoid is controlled by a switch on the handlebar. On some models control circuit has a cut-out switch in the transmission cover. Switch plunger contacts a nub on the shifter cam only when transmission is in neutral to complete the starting circuit. This prevents starter operation when transmission is in gear.

NOTE

Starter motor should never be operated continuously for more than 30 seconds without pausing to let it cool for at least two minutes. The motor is not designed for continuous operation and serious damage may result.

TROUBLESHOOTING

GENERAL

The starter motor is designed to be corrosion resistant and requires very little maintenance. However, to ensure satisfactory operation, periodic inspection of brushes and commutator should be made. In the event starter motor fails to operate satisfactorily, the following checks should be made before removing motor for inspection:

WIRING

Make sure the mounting and wiring connections are tight and in good condition. The solenoid switch should be firmly mounted and all wiring connections should be clean and tight. Also inspect the connections to the battery and return circuit, as loose or dirty connections anywhre in the circuit will cause high resistance and reduced motor efficiency.

BATTERY

If the connections and wiring are found to be satisfactory, the battery should be checked to determine its state of charge (see "CHARGING BATTERY"). If the battery is charged and battery voltage is reaching the motor without any excessive losses in wiring or connections, the trouble may be attributed to either the engine or the starter motor itself.

SWITCHES

If the battery is charged but there is no current flow to motor at all, trouble is probably in handlebar switch, transmission cutout switch or the solenoid switch. This can be determined by bypassing each switch with heavy jumper (refer to "WIRING DIAGRAM").

ENGINE

Excessive friction in the engine from tight bearings or pistons or from heavy oil obviously makes engine harder to crank. However, if engine is known to be in normal condition and the rest of the starting system is satisfactory, the starter motor should be removed for further checking.

NOTE

Electrical tests to locate cause of starting system failures can be made using the Sun VAT-26 Tester and applicable service bulletins.

STARTER MOTOR AND DRIVE

REMOVING AND INSTALLING STARTER MOTOR (Figure 5-42)

Disconnect solenoid cable from starter motor terminal. Remove starter motor clamp bolt and lockwasher (1) from crankcase. Unscrew motor thru bolts (4) from starter shaft housing (3). Remove starter motor and clamp (2) as an assembly.

NOTE

To prevent brushes from escaping holders, insert a spool of slightly larger diameter than the commutator underneath brushes when brushes are half exposed as armature is withdrawn from frame. In this way armature can be reinstalled without removing brushes from holders.

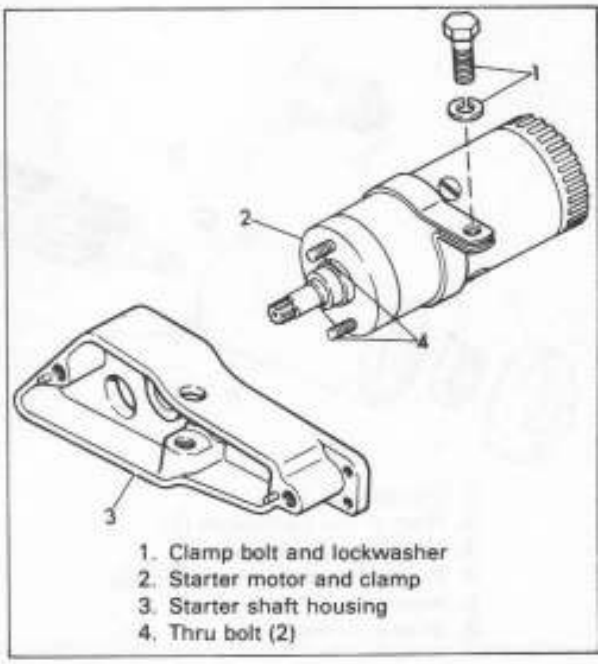

Figure 5-42. Removing Starter Motor

PRESTOLITE STARTER MOTOR

DISASSEMBLING AND ASSEMBLING (Figure 5-43)

Remove thru bolts (1) with washers and lockwashers (2). Remove commutator end cover (3) holding brush plate (4) in place if necessary.

NOTE

End cover is marked with a double line next to the motor terminal. Also brush holder has a positioning notch which registers on the motor terminal insulator. See Figure 5-43. Parts must be located correctly when reassembled.

Armature (5) and drive end cover (6) with bearing (7) are removed as an assembly. Bearing (7) is a light press fit on armature shaft and is staked in end cover (6).

Reassembly is essentially the reverse of the disassembly procedure. If brushes (9 and 10) and springs (8) have been released from holder, use clips or clamps as shown in Figure 5-45 to hold them in place while installing armature. Note that drive end of frame is notched to fit drive end cover. Line up positioning notch in the brush holder assembly with terminal insulator. Line up positioning mark on commutator end head with motor terminal. Install thru bolts, tightening to 20-25 in-lbs torque.

HITACHI STARTER MOTOR

DISASSEMBLING AND ASSEMBLING (Figure 5-46)

Remove terminal nut, washer and lockwasher (1). Remove nuts and lockwashers (2) from thru bolts (3). Remove thru bolts with lockwashers (3). Remove two screws and lockwashers (4) fastening the rear cover.

Separate the rear cover (5) from the starting motor frame as follows: tap the rear cover with a soft hammer to make an opening between the rear cover and the frame. Next insert a screwdriver into the opening and push out the rear cover taking care to see that terminal and insulator (6) remain in place next to motor frame.

Lift the brushes from the commutator. As shown in Figure 5-47, pulling up the brush spring with a steel wire and pull out the brushes. Note that two negative brushes (7) have to be withdrawn slightly to be held in the brush guide, making use of the action of the brush spring. The other two positive brushes (8) should be completely removed from the brush holder assembly (9) as shown in Figure 5-48.

Remove front cover (10), armature (11) with ball bearing (12) and thrust washer(s) (13).

Assemble starting motor in reverse order of disassembly; noting the following:

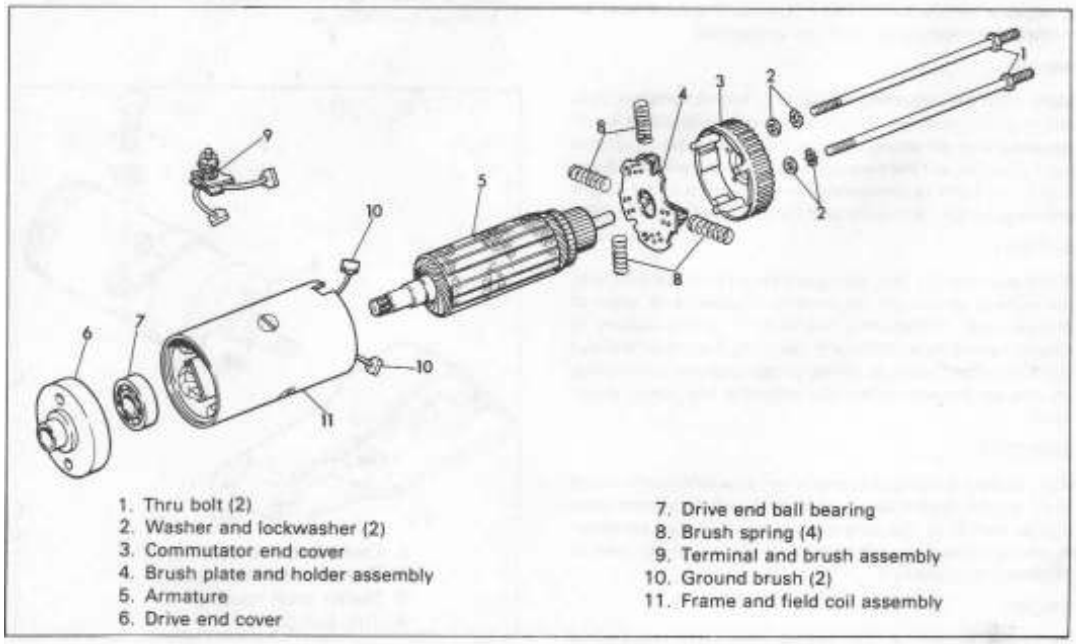

1. Thru bolt (2)
2. Washer and lockwasher (2)
3. Commutator end cover
4. Brush plate and holder assembly
5. Armature
6. Drive end cover
7. Drive end ball bearing
8. Brush spring (4)
9. Terminal and brush assembly
10. Ground brush (2)
11. Frame and field coil assembly

Figure 5-43. Prestolite 4-Pole Starter Motor - Exploded View

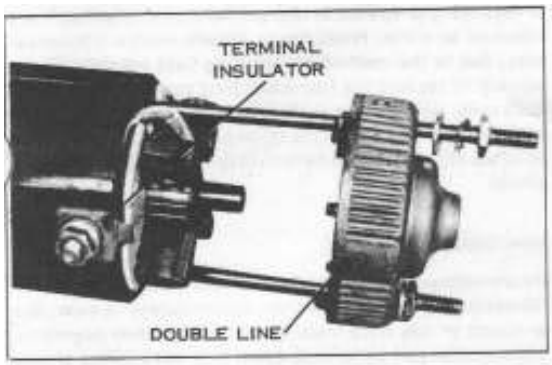

Figure 5-44. Positioning Prestolite Starter Motor Cover

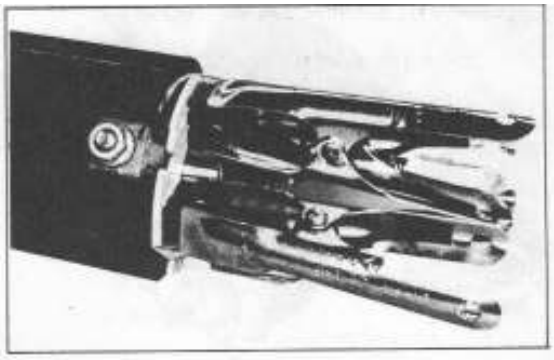

Figure 5-45. Using Clamps to Hold Prestolite Brushes in Place

1. To determine the proper position of frame and front cover, align notch in cover with projected part of the frame.

2. After installing positive brushes in the brush holder and covering with the rear cover, align and fasten the brush holder to the rear cover with screws and lockwashers from the outside of the rear cover.

3. Thru bolt nuts should be tightened to 20-25 in-lbs torque.

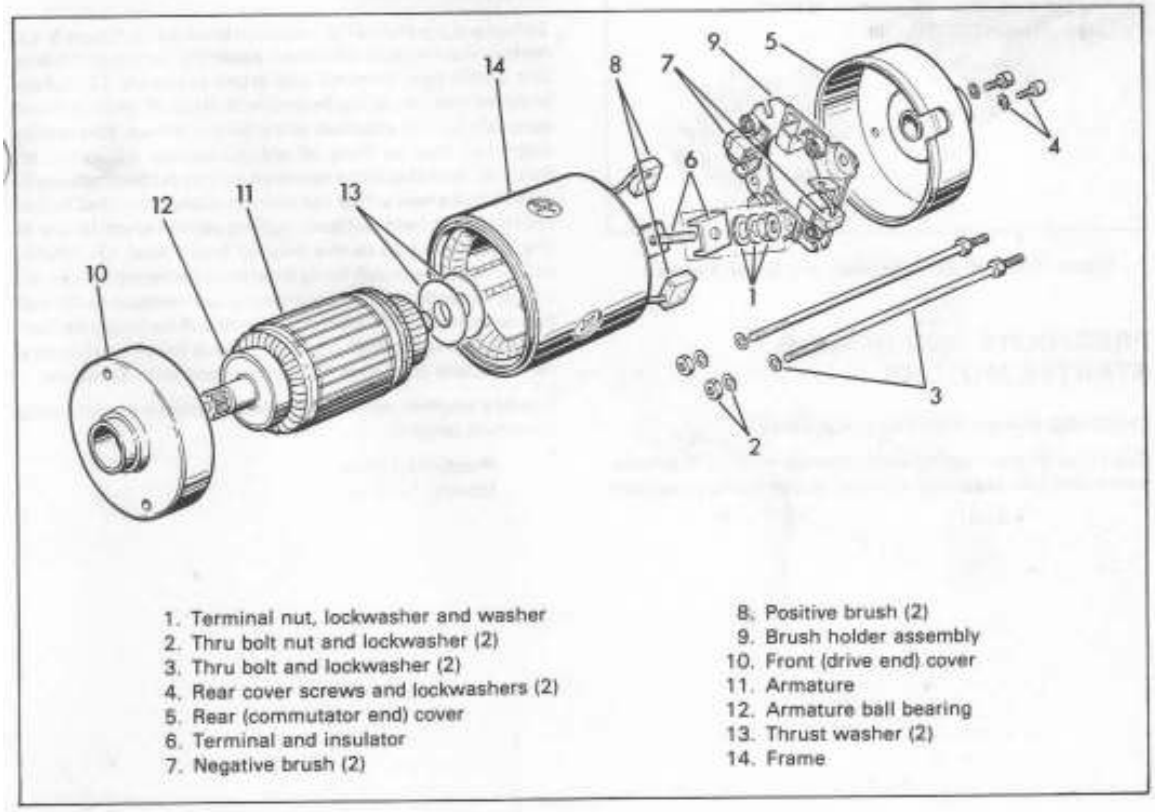

Figure 5-46. Hitachi Starter Motor - Exploded View

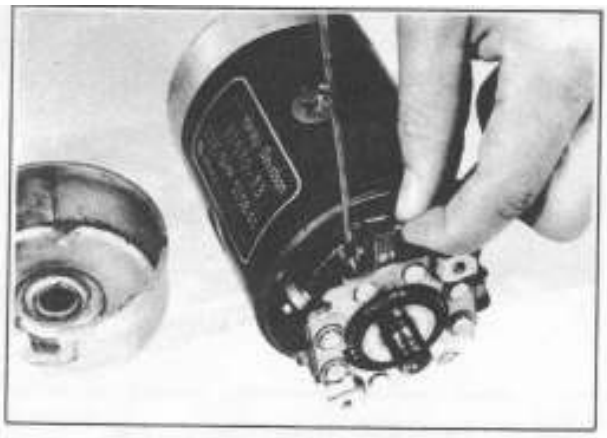

Figure 5-47. Removing Brushes - Hitachi Motor

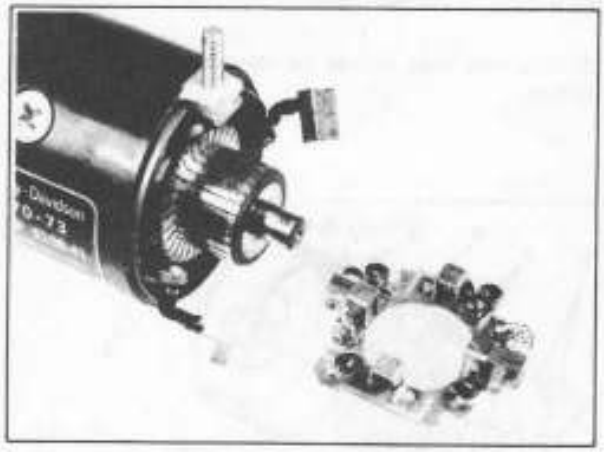

Figure 5-48. Hitachi Brushes and Brush Holder

PRESTOLITE AND HITACHI STARTER MOTORS

CHECKING FRAME AND FIELD ASSEMBLY

Due to the internal wiring and connections of the Prestolite frame and field assembly, there is no satisfactory field test to determine grounded or shorted field coils. If field coils are required on either Prestolite or Hitachi motors it is necessary, due to the method of installing field coils in this assembly, to replace the frame and field assembly. To test for field coils, using a test lamp, place one probe of test light against the frame. Place the other probe against each of the brushes attached to the field coils to indicate open or closed circuit.

REPAIRING ARMATURE

If commutator is dirty it can be cleaned by polishing with No. 00 sandpaper - not emery cloth. If commutator is worn, out of round or has high mica insulation between segments, commutator can be turned down in a lathe. Mica should than be undercut 1/32 in. deep with an undercutting machine and slots cleaned out to remove dirt or copper dust. If undercutting machine is not available, undercutting can be accomplished satisfactorily using a hacksaw blade. Commutator should then be sanded lightly with No. 00 sandpaper to remove any burrs left from undercutting procedure. Inspect commutator end cover bushing. If bushing is worn, replace complete commutator end cover assembly. Inspect drive end cover and bearing and replace bearing if worn to excessive looseness.

REPLACING BRUSHES

To replace the Prestolite insulated brushes (9, Figure 5-43) remove the terminal and brush assembly from slot in frame and install new terminal and brush assembly. To replace brushes attached to the field coils, first cut off old brush lead wire where it is attached to the field coil lead. Thoroughly clean coil lead by filing off old connection. Insulation on field coil lead should be removed only as far back as necessary to make new solder connection. Using rosin flux, solder brush lead to field coil lead, making certain brush lead is in the same position as the original brush lead. On Hitachi model negative brush leads must be unsoldered from brush holder to replace. Do not overheat brush leads or solder will run on wire strands and brush leads will no longer be flexible. Before reassembling motor, check brush connections for sufficient clearance from frame and from armature.

Replace brushes when worn down close to the following minimum lenghts.

Prestolite 1/4 in.
Hitachi 7/16 in.

TOOLS

Order from Sun Electric Corp., Chicago, Ill.

Sun Power Timing Light Model PTL-45

Removes generator drive gear.

Part No. 95715-19A Gear Puller

Clear plastic plug threads into crankcase timing hole for accurate ignition timing with strobe light timing.

Part No. 96295-65 Timing Mark View Plug

For testing state of charge of storage batteries. Specific gravity of electrolyte can be corrected for temperature extremes by means of built-in thermometer.

Part No. 96802-63 Battery Hydrometer - with Temperature Correction Feature

MISCELLANEOUS 6

TABLE OF CONTENTS

PAGE

Instruments 6-1

INSTRUMENTS

SPEEDOMETER

GENERAL

Lubricate cable core every 5000 miles with graphite grease.

REMOVING AND SERVICING

To lubricate the speedometer drive core or replace a damaged or broken core, proceed as follows:

With a pliers remove speedometer case coupling nut from speedometer head and withdraw core from casing. To free a broken core from casing, disconnect lower case coupling nut from speedometer drive unit located under transmission sprocket cover or on front wheel (1973 and later). Withdraw core from lower case end.

Install core in upper end of casing, applying a light coat of graphite grease to the core as it is inserted into position. Engage squared lower end of core in speedometer drive shaft. Connect case coupling upper end of the speedometer head, engaging squared end of core in speedometer shaft. Be sure to tighten both case coupling nuts securely.

TACHOMETER

GENERAL

Lubricate cable core every 5000 miles with graphite grease.

REMOVING AND SERVICING

To lubricate the tachometer drive core or replace a damaged or broken core proceed as follows:

With a pliers remove case coupling nut from tachometer and withdraw core from casing. To free a broken core from casing, disconnect lower case coupling nut from drive unit. Withdraw core from lower case end.

Install core in upper end of casing, applying a light coat of graphite grease to the core as it is inserted into position. Engage squared lower end of core in drive shaft. Connect case coupling upper end to the head, engaging squared end of core in shaft. Be sure to tighten both case coupling nuts securely.

Harley-Davidson Motor Co., Inc.
Technical Communications Dept.
Milwaukee, WI 53201